POLE SHAFT				POLE BASE PLATE		
Pole Height (FT.)	AFB (*) (In.)	AFT (*) (In.)	Thk. (In.) (Min.)(+)	'A' (In.)	'B' (In.)	'C' (In.)
25.0	12.5 1	9.00 1	.1345(+) 1	25.0	25.5	1.25
30.0	13.2 3	9.00 3	.1345(+) 1	25.0	25.5	1.25
35.0	13.9	9.00	.1345(+) 1	25.0	25.5	1.25
40.0	14.6 1	9.00 1	.1793(+) 1	25.0	25.5	1.25
45.0	17.0 1	10.7 1	.1875(+) 1	25.0	25.5	1.25
50.0	18.0	11.0	.250	25.0	25.5	1.25

(*)–AFB–Across Flats At Base Of Shaft.
(*)–AFT–Across Flats At Top Of Shaft.

NOTES:

1) Design: All Standards Are Designed To The 2009 AASHTO Standard 2 Specifications For Structural Supports For Highway Signs, Luminaires And Traffic Signals.
   Loading: (1) Camera–EPA 4.0 Sq. Ft. @ 2 Ft. Above Top Of Pole And (1) Dish –EPA 1 Sq. Ft. @ Top Of Pole.
2) Wind Speed: 90 MPH W/3 Second Gust.
3) 50 Year Design/Recurrence Interval. 2
4) Welding: All Welding Per Latest AWS Structural Welding Code D1.1 Steel. 2
5) Finish: All Components To Be Hot Dip Galvanized As Per ASTM A123/F2329. 8
6 Maximum Allowed Deflection: 0.7" @ 30 MPH Wind, 0.8" @ 35 MPH Wind Or 1.4" @ 70 MPH.
7 Camera Plate Dimensions To Be Verified As Correct–As Shown– Or Specified As Required By Customer Prior To Fabrication.

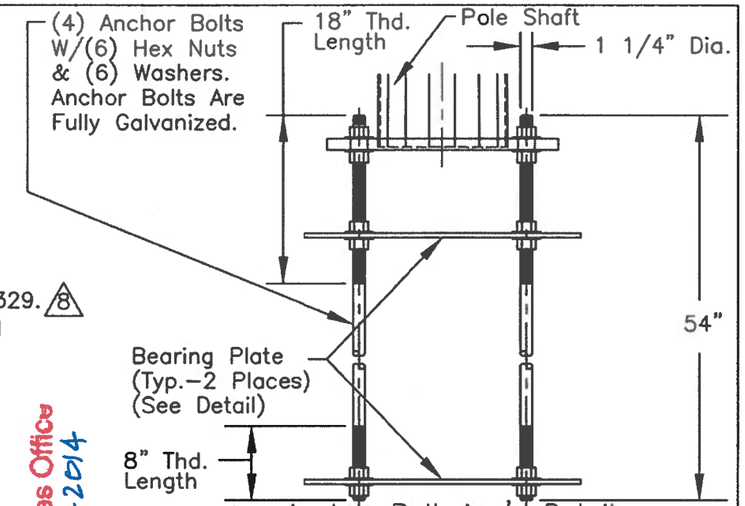

2 Anchor Bolt Ass'y Detail

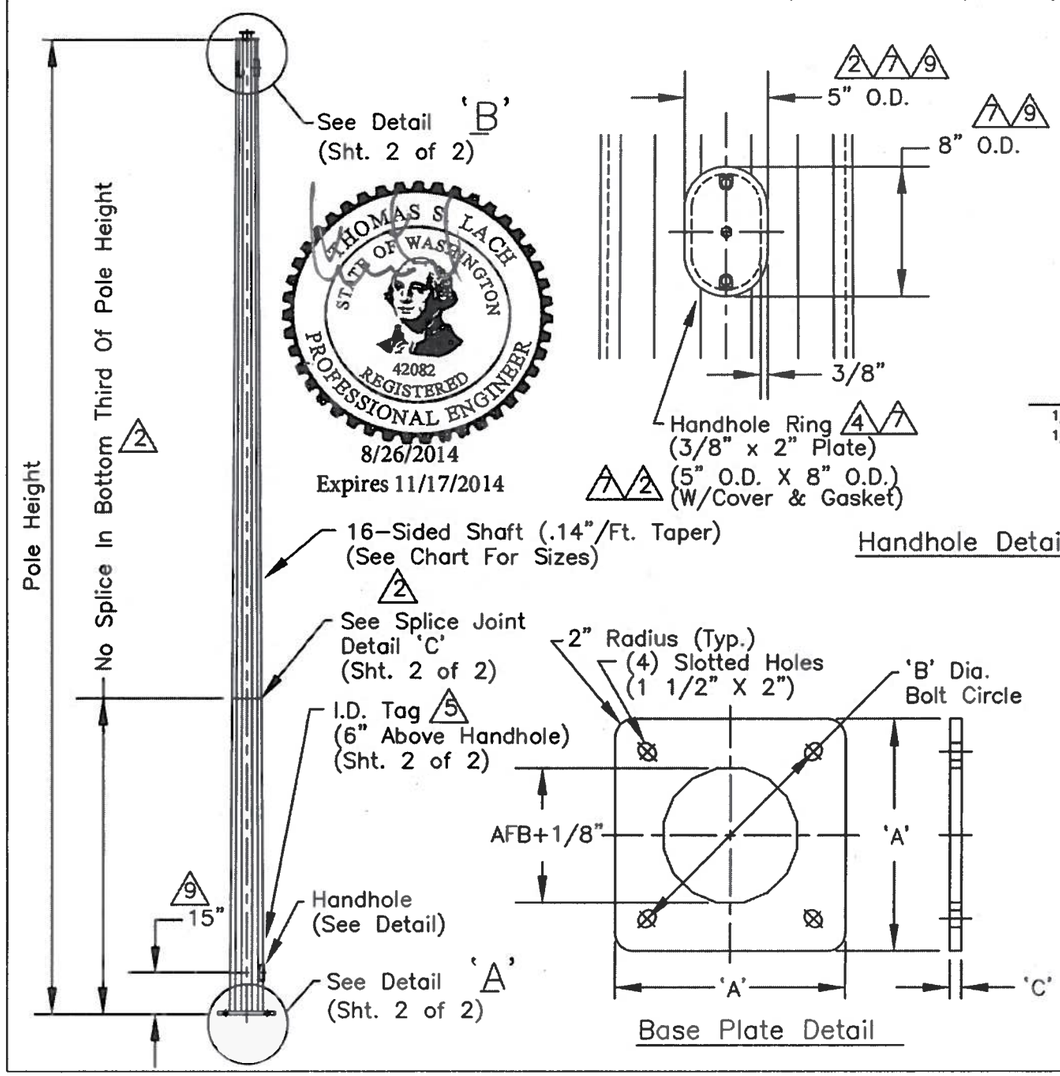

Base Plate Detail

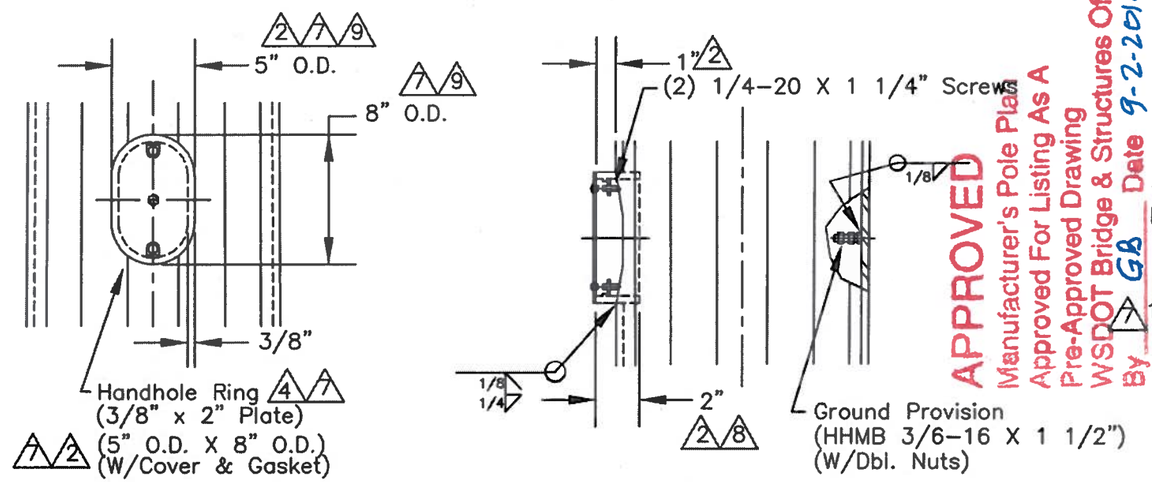

Handhole Detail

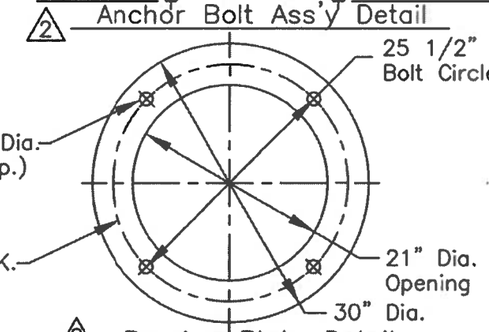

2 Bearing Plate Detail

APPROVED
Manufacturer's Pole Plan
Approved For Listing As A
Pre-Approved Drawing
WSDOT Bridge & Structures Office
By GB Date 9-2-2014

THOMAS S. LACH
STATE OF WASHINGTON
42082
REGISTERED PROFESSIONAL ENGINEER
8/26/2014
Expires 11/17/2014

MATERIAL DATA (UNLESS OTHERWISE NOTED)	
Components	Grade
Handhole Ring Plates	ASTM A36 OR A572 7
All Tapered Tubes	ASTM A572, A1011, A606, Gr. 50 (Min.)
Base Plate	ASTM A572 Gr. 50
Camera & Top Plate	ASTM A36 OR A572 7
Pipe	ASTM A53 Gr. B ASTM A500 Gr. B
Bearing Plate	ASTM A36 OR A572 7
Anchor Bolts	ASTM F1554 Gr. 105
Nuts	ASTM A563–DH
Flat Washers	ASTM F436

4

REV:	DESCRIPTION:	BY:	DATE:
9	REVISED DWG MARKUPS, ERF# 13406	IF	8/25/2014
8	REVISED DWG MARKUPS, ERF# 12404	IF	12/16/2013
7	REVISED DWG MARKUPS, ERF# 12394	IF	12/12/2013
6	REVISED PER GARY BEDI E–MAIL.	JHG	12/1/2009
5	ADDED I.D. TAG	JHG	11/24/2009
4	REVISED PER RETURNED MARKED–UP DRAWINGS.	JHG	10/20/2009
3	REVISED PER RETURNED MARKED–UP DRAWINGS.	JHG	9/16/2009
2	REVISED PER RETURNED MARKED–UP DRAWINGS.	JHG	8/21/2009
1	REVISED PER TOM LACH ENGINEERING CALCULATIONS. A606 WAS A607.	JHG	2/19/2009

KW
909 INDUSTRIAL BLVD. •SUGAR LAND, TEXAS 77478

STATE OF WASHINGTON
CAMERA POLE

SHT. 1 OF 2

DRAWN BY:	DATE:	DRAWING NO.:	REV:
JHG	1/11/2008	10–200–CAM–1	9
APPROVED BY:	DATE:		

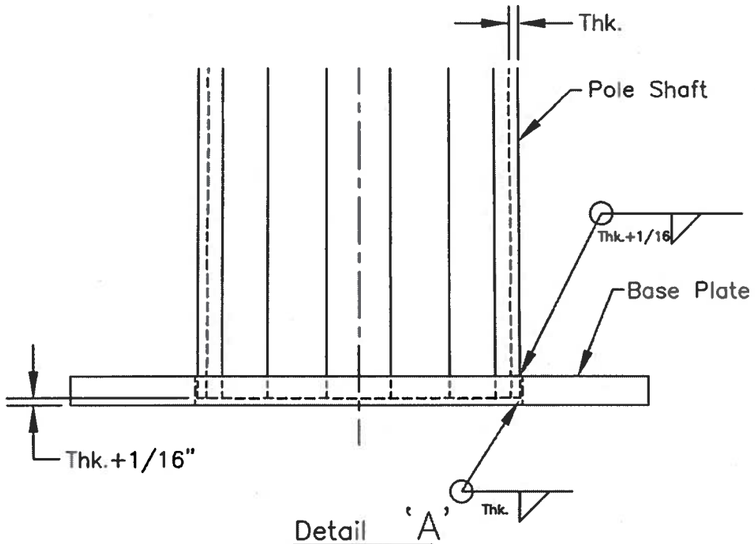

Detail 'A'

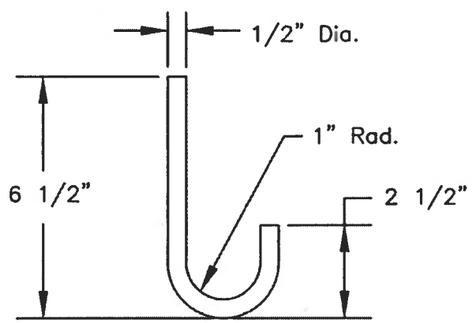

J–Hook Detail

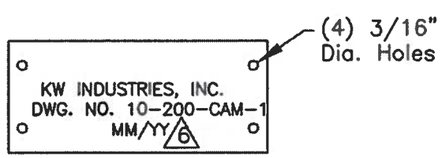

Identification Tag Detail 5

Material–14 Ga. Aluminum
Secure With (4) 1/8"
Stainless Steel Rivets.
Letters To Be Stamped or Etched.
Minimum Letter Size–3/16".

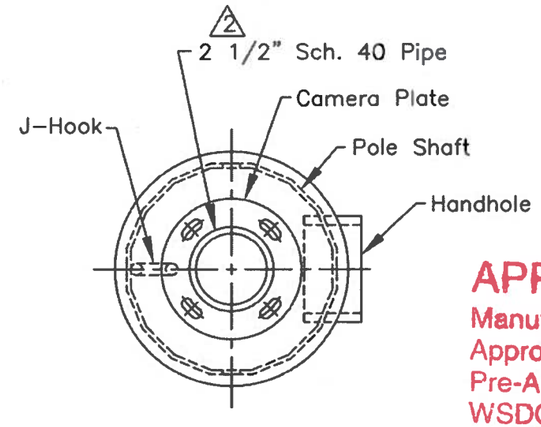

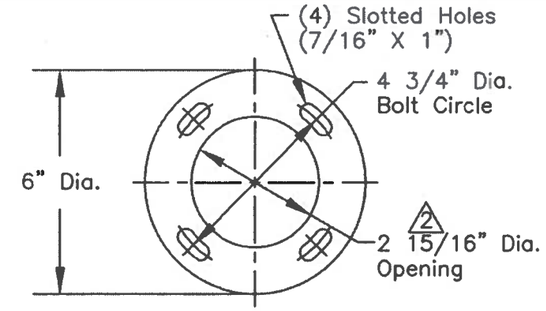

Camera Plate Detail

APPROVED
Manufacturer's Pole Plan
Approved For Listing As A
Pre-Approved Drawing
WSDOT Bridge & Structures Office
By GB Date 9-2-2014

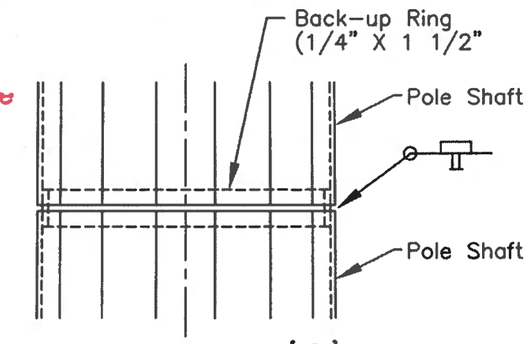

Butt Weld Detail 'C'
(No Splice In Bottom Third Of Pole Height)

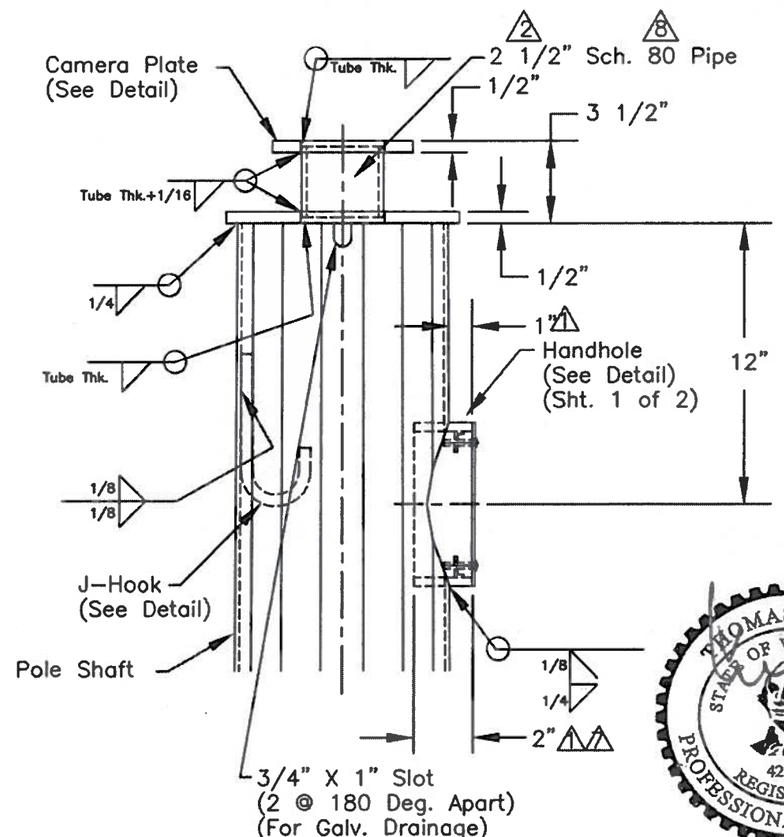

Detail 'B'

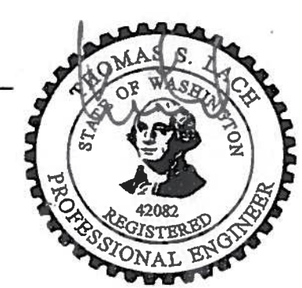

8/26/2014
Expires 11/17/2014

REV:	DESCRIPTION:	BY:	DATE:
9	REVISED DWG MARKUPS, ERF# 13406	IF	8/26/2014
8	REVISED DWG MARKUPS, ERF# 12404	IF	12/16/2013
7	REVISED DWG MARKUPS, ERF# 12394	IF	12/12/2013
6	REVISED PER GARY BEDI E–MAIL.	JHG	12/1/2009
5	ADDED I.D.TAG.	JHG	11/24/2009
4	CHANGED REVISION NUMBER TO MATCH REVISION NUMBER ON SHT. 1 OF 2 PER WASHINGTON D.O.T. REQUEST.	JHG	11/4/2009
2	REVISED PER RETURNED MARKED–UP DRAWING.	JHG	10/20/2009
1	REVISED PER RETURNED MARKED–UP DRAWING.	JHG	8/22/2009

KW

909 INDUSTRIAL BLVD. •SUGAR LAND, TEXAS 77478

STATE OF WASHINGTON
CAMERA POLE

SHT. 2 OF 2

DRAWN BY:	DATE:	DRAWING NO.:	REV:
JHG	1/15/2008	10–200–CAM–1	9
APPROVED BY:	DATE:		