APPROVED
Manufacturer's Pole Plan
Approved For Listing As A
Pre-Approved Drawing
WSDOT Bridge & Structures Office
By GB Date 12-2-09

THOMAS S. DAO
STATE OF WASHINGTON
42082
REGISTERED
PROFESSIONAL ENGINEER
11-30-09
Expires 11-17-10

FOR APPROVAL ONLY

PRINT NAME: _____

SIGNATURE: _____

DATE: _____

POLE SHAFT				POLE BASE PLATE		
Pole Height (FT.)	AFB (*) (In.)	AFT (*) (In.)	Thk. (In.) (Min.)(+)	'A' (In.)	'B' (In.)	'C' (In.)
25.0	12.5 △1	9.00 △1	.1345(+) △1	25.0	25.5	1.25
30.0	13.2 △3	9.00 △3	.1345(+) △1	25.0	25.5	1.25
35.0	13.9	9.00	.1345(+) △1	25.0	25.5	1.25
40.0	14.6 △1	9.00 △1	.1793(+) △1	25.0	25.5	1.25
45.0	17.0 △1	10.7 △1	.1875(+) △1	25.0	25.5	1.25
50.0	18.0	11.0	.250	25.0	25.5	1.25

(*)-AFB-Across Flats At Base Of Shaft.
(*)-AFT-Across Flats At Top Of Shaft.

NOTES:

1) Design: All Standards Are Designed To The 2009 AASHTO Standard Specifications For Structural Supports For Highway Signs, Luminaires And Traffic Signals. △2
   Loading: (1) Camera-EPA 4.0 Sq. Ft. @ 2 Ft. Above Top Of Pole And (1) Dish -EPA 1 Sq. Ft. @ Top Of Pole.
2) Wind Speed: 90 MPH W/3 Second Gust.
3) 50 Year Design/Recurrence Interval. △2
4) Welding: All Welding Per Latest AWS Structural Welding Code D1.1 Steel. △2
5) Finish: All Components To Be Hot Dip Galvanized As Per ASTM A123/A153.
6 Maximum Allowed Deflection: 0.7" @ 30 MPH Wind, 0.8" @ 35 MPH Wind Or 1.4" @ 70 MPH.
7 Camera Plate Dimensions To Be Verified As Correct-As Shown- Or Specified As Required By Customer Prior To Fabrication.

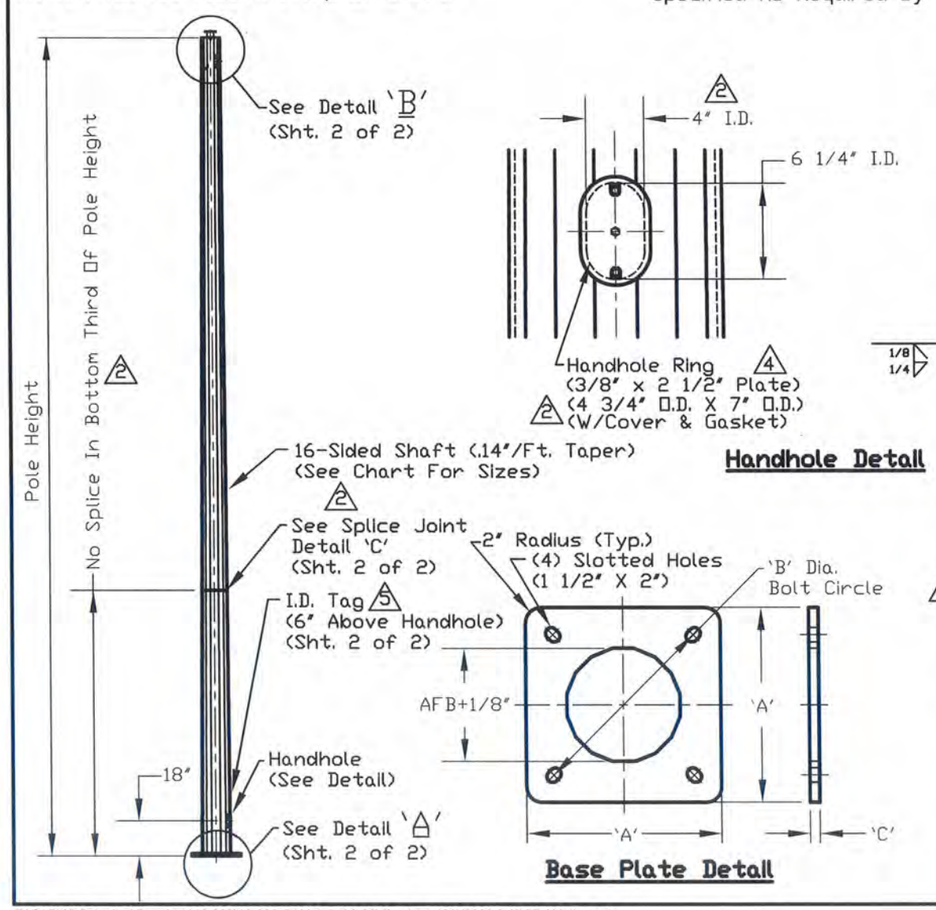

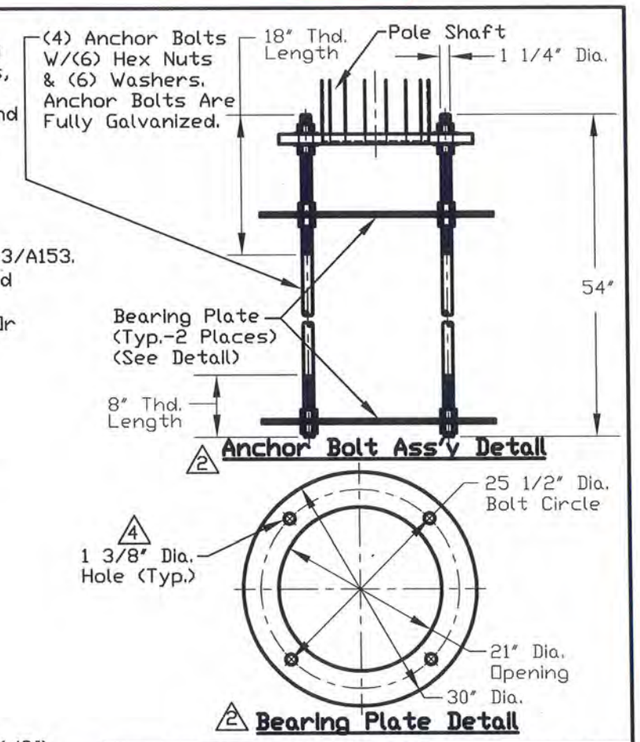

MATERIAL DATA (UNLESS OTHERWISE NOTED) △4	
Components	Grade
Handhole Ring Plates	ASTM A36, Gr. 36
All Tapered Tubes	ASTM A572, A1011, A606, Gr. 50 (Min.)
Base Plate	ASTM A572 Gr. 50
Camera & Top Plate	ASTM A36
Pipe	ASTM A53 Gr. B ASTM A500 Gr. B
Bearing Plate	ASTM A36
Anchor Bolts	ASTM F1554 Gr. 105
Nuts	ASTM A563-DH
Flat Washers	ASTM F436

REV:	DESCRIPTION:	BY:	DATE:
6	REVISED PER GARY BEDI E-MAIL.	JHG	12/1/2009
5	ADDED I.D. TAG	JHG	11/24/2009
4	REVISED PER RETURNED MARKED-UP DRAWINGS.	JHG	10/20/2009
3	REVISED PER RETURNED MARKED-UP DRAWINGS.	JHG	9/16/2009
2	REVISED PER RETURNED MARKED-UP DRAWINGS.	JHG	8/21/2009
1	REVISED PER TOM LACH ENGINEERING CALCULATIONS. A606 WAS A607.	JHG	2/19/2009

KW
909 INDUSTRIAL BLVD. • SUGAR LAND, TEXAS 77478

STATE OF WASHINGTON
CAMERA POLE

SHT. 1 OF 2

DRAWN BY:	DATE:	DRAWING NO.:	REV:
JHG	1/11/2008	10-200-CAM-1	6
APPROVED BY:	DATE:		

E:\CAD\10 Submittal Drawings\10-200\10-200-CAM-1-6 (1 OF 2) .dwg, 12/1/2009 6:17:57 AM, jim.grein