Washington State Department of Transportation
Bridge and Structures Office

LEWIS & CLARK BRIDGE NO. 433/1

LEWIS & CLARK BRIDGE NO. 433/1

BRIDGE REHAB DESIGN:	WSDOT
CONTRACTOR/PRECASTER:	MAX. J KUNEY
LIFTING OPERATIONS:	MAMMOET INC.
ADT ON BRIDGE:	20,000
TRAFFIC CONSTRAINTS:	120 - 8 hr night closures
	(9:30 pm – 5:30 am)
	200 - single lane closures

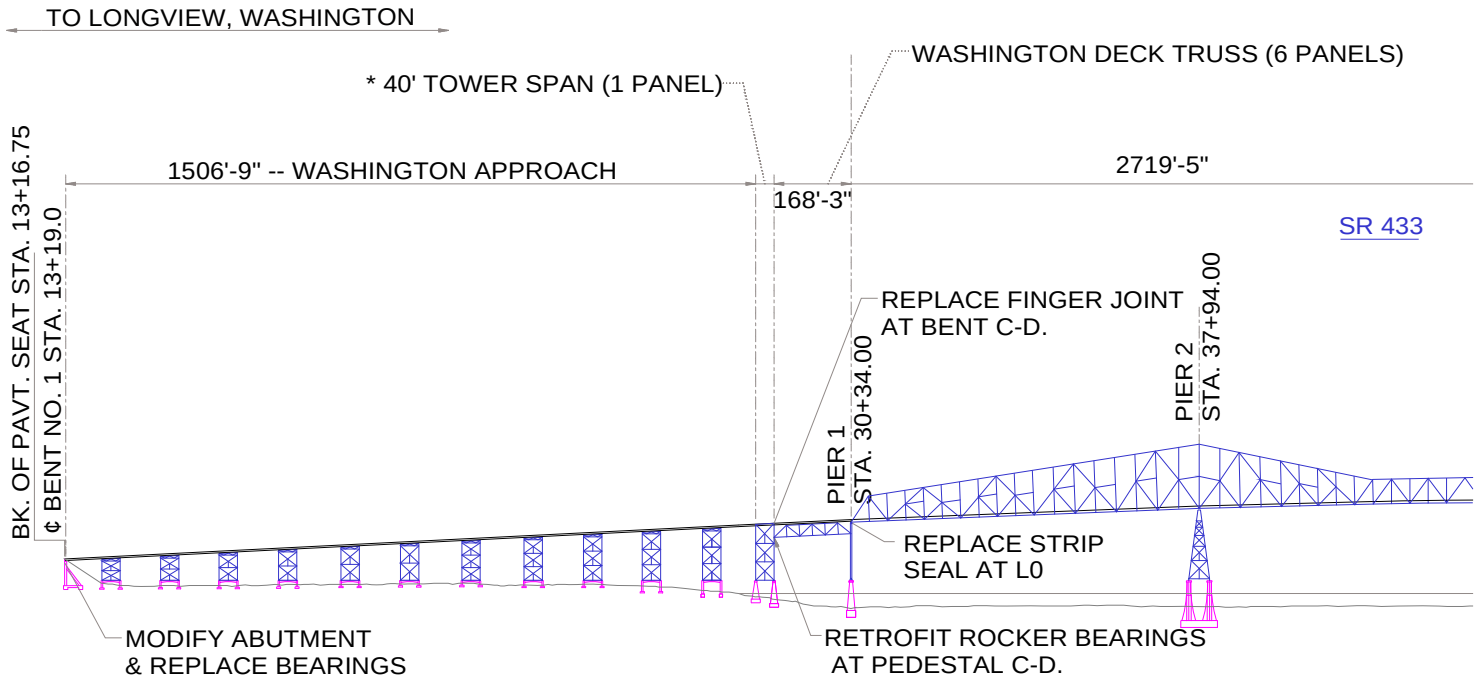

ELEVATION

Total Length of Bridge - 5476 ft

Thru Truss - 2720 ft -	65 precast panels
WA approach Deck Truss - 168 ft -	7 precast panels
Oregon approach Deck Truss - 955 ft -	31 precast panels
TOTAL	103

Panel were 36ft wide and varied in length from 25ft to 45ft
46 - Partial width panels were 3ft wide and varying in lengths from 58ft to 70ft in the WA approach.

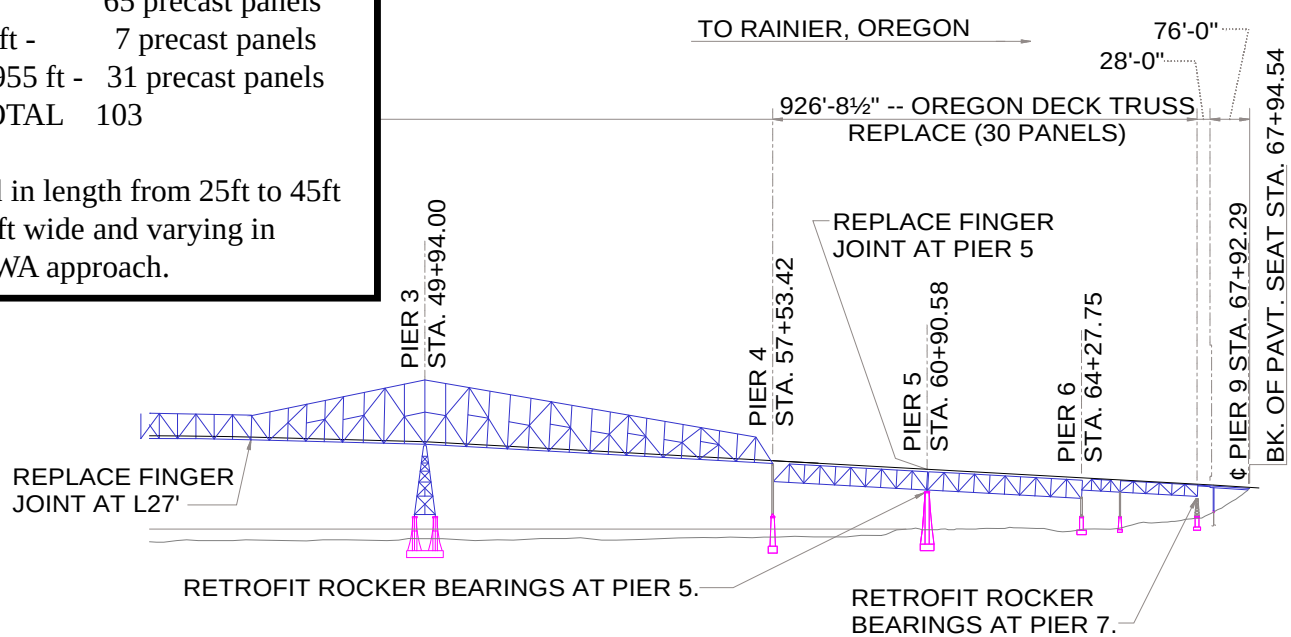

ELEVATION

MAIN SPAN TRUSS EXISTING ROADWAY DECK

MAIN SPAN TRUSS NEW ROADWAY DECK

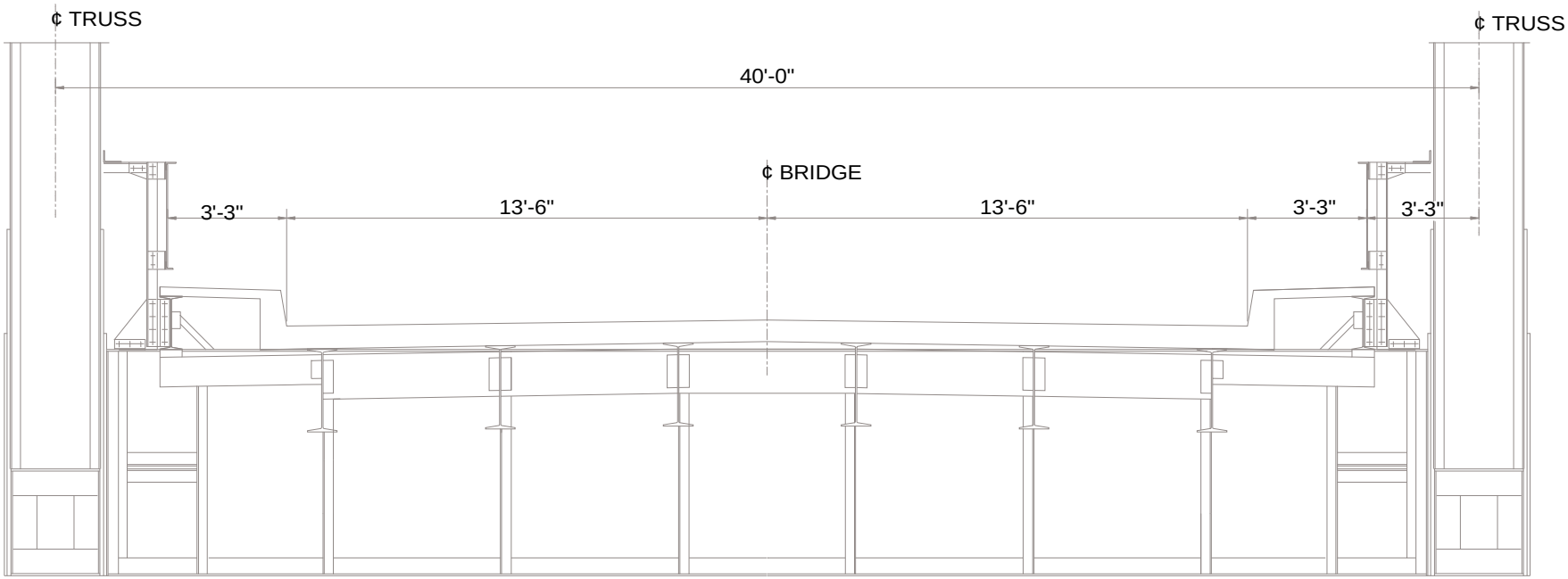

SECTION - EXISTING DECK

Floorbeam flanges had a 25% loss in section

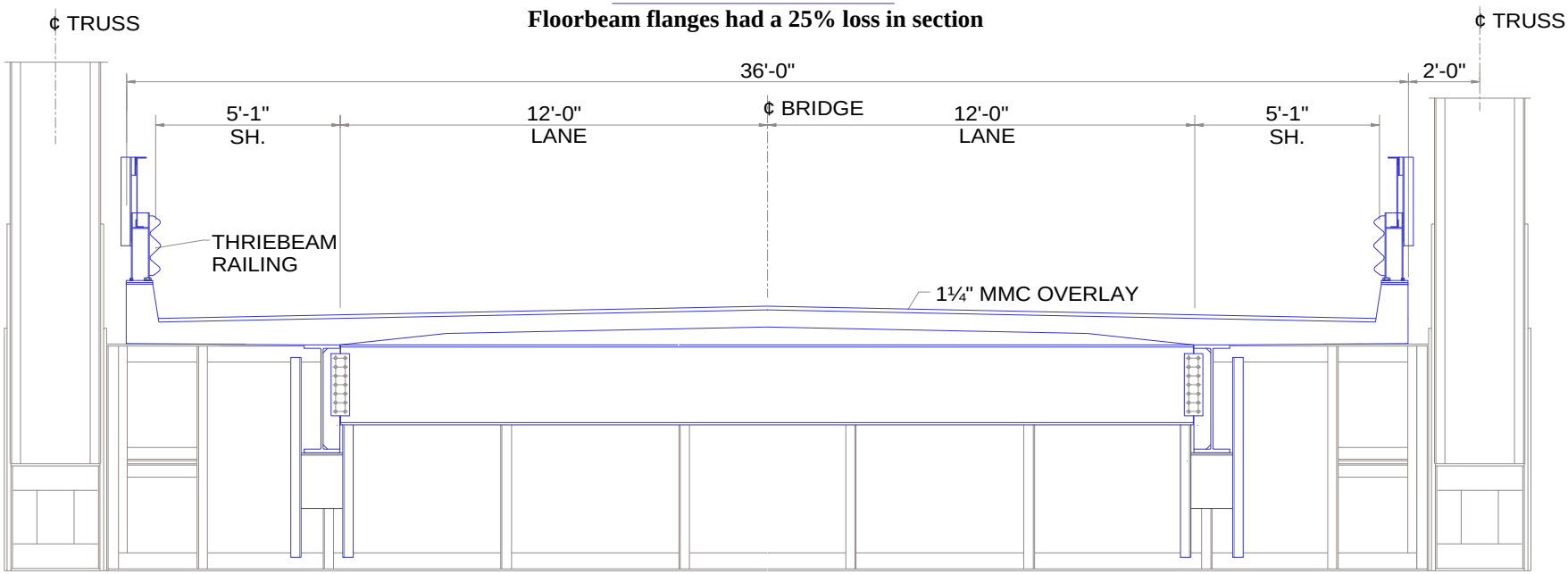

SECTION - NEW DECK INSTALLED

MAIN SPAN ROADWAY DECK REPLACEMENT

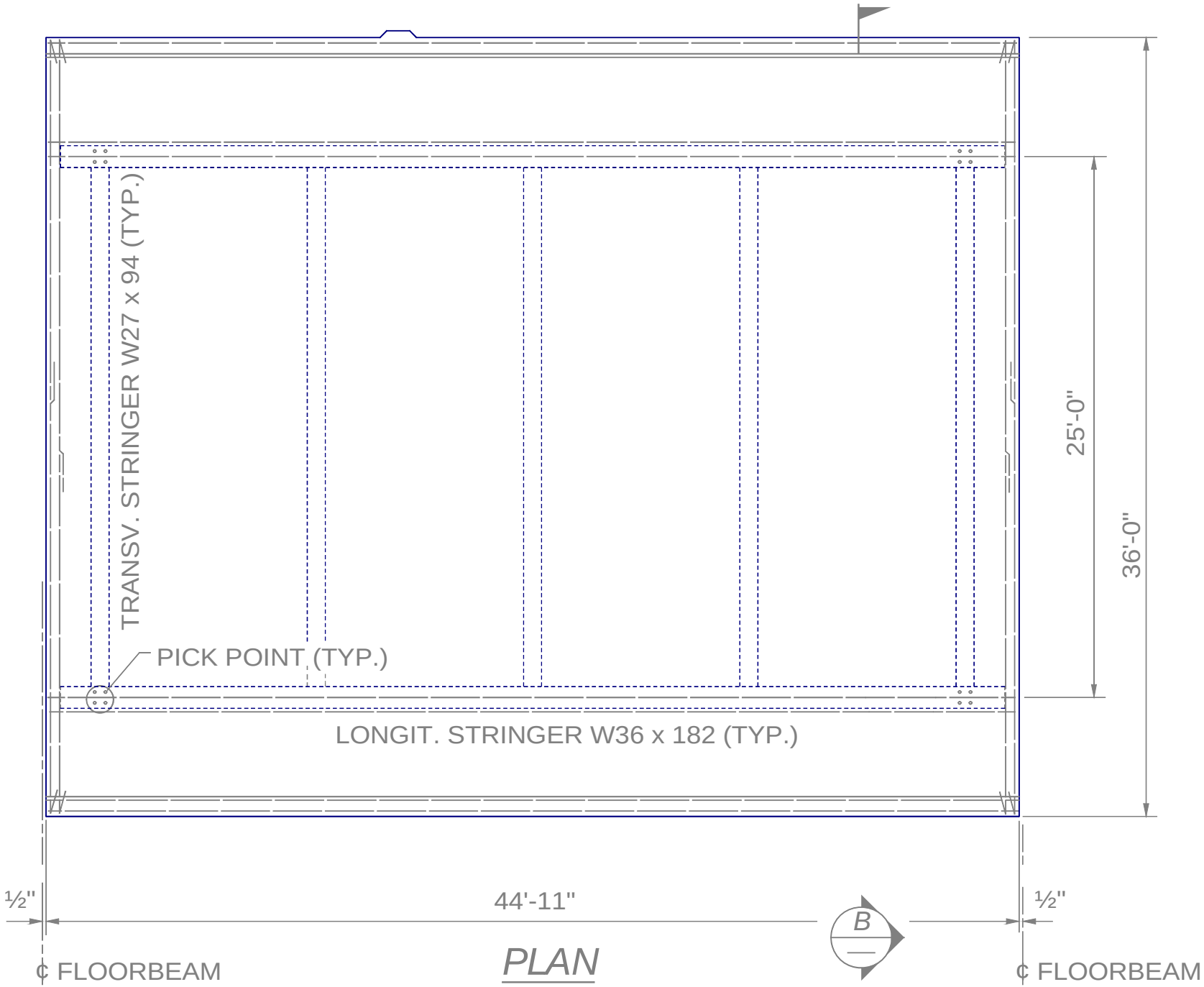

DECK PANEL PLAN VIEW

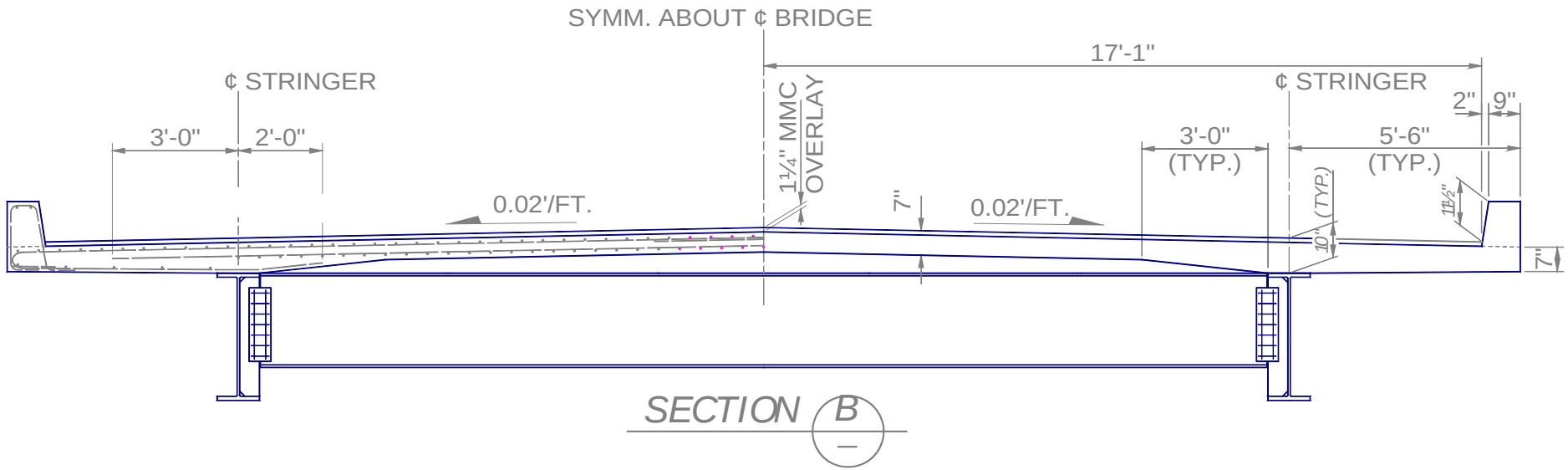

TYPICAL DECK PANEL SECTION

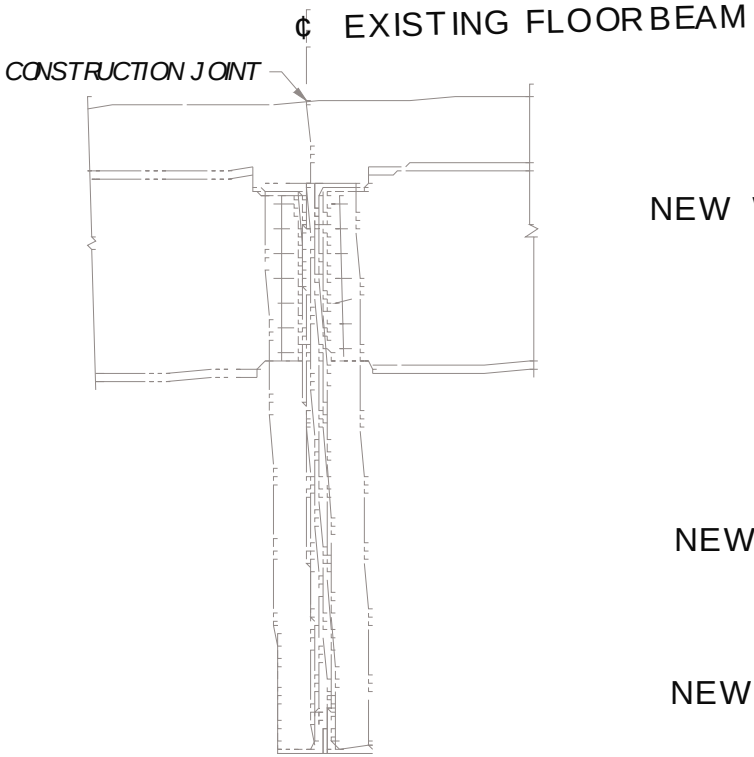

OLD STRINGER
TO FLOORBEAM CONNECTIONS

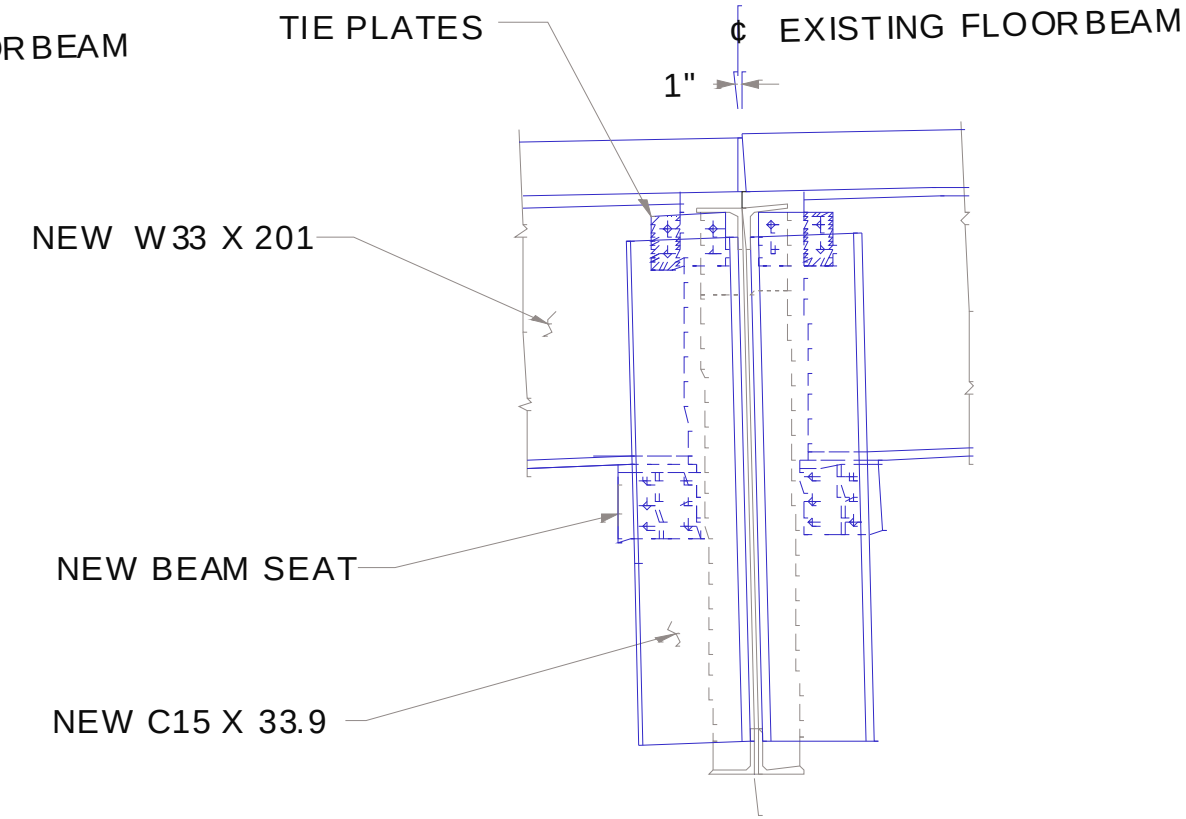

MODIFIED CONNECTION
TYPICAL MAIN SPAN FLOORBEAM

J DW
2-10
BEAMS OFF
STRINGER

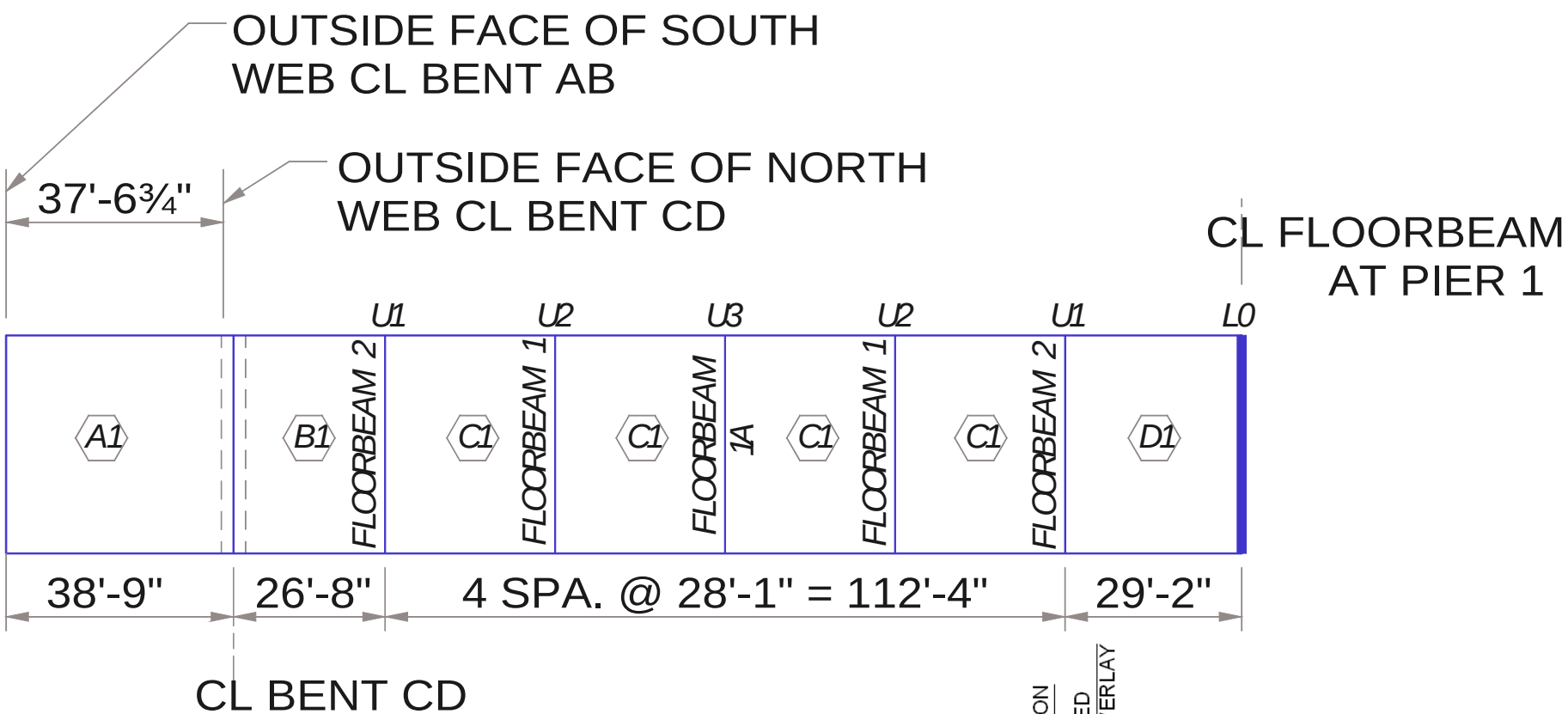

DECK PANEL LAYOUT

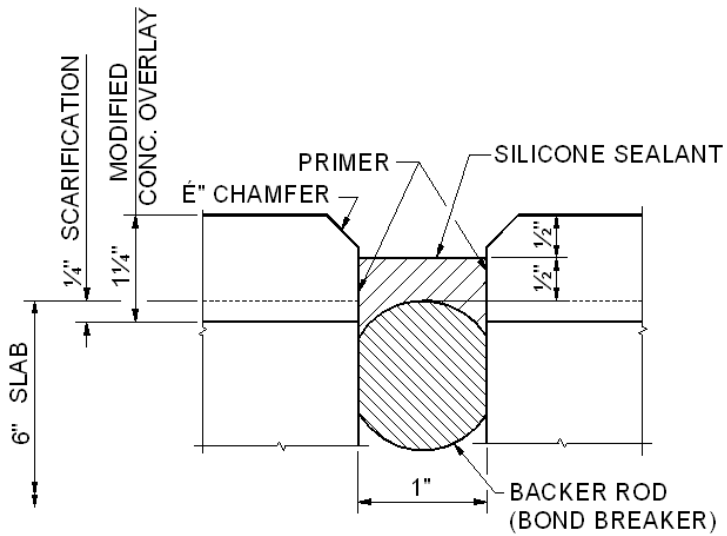

TYPICAL EXPANSION JOINT

WASHINGTON APPROACH

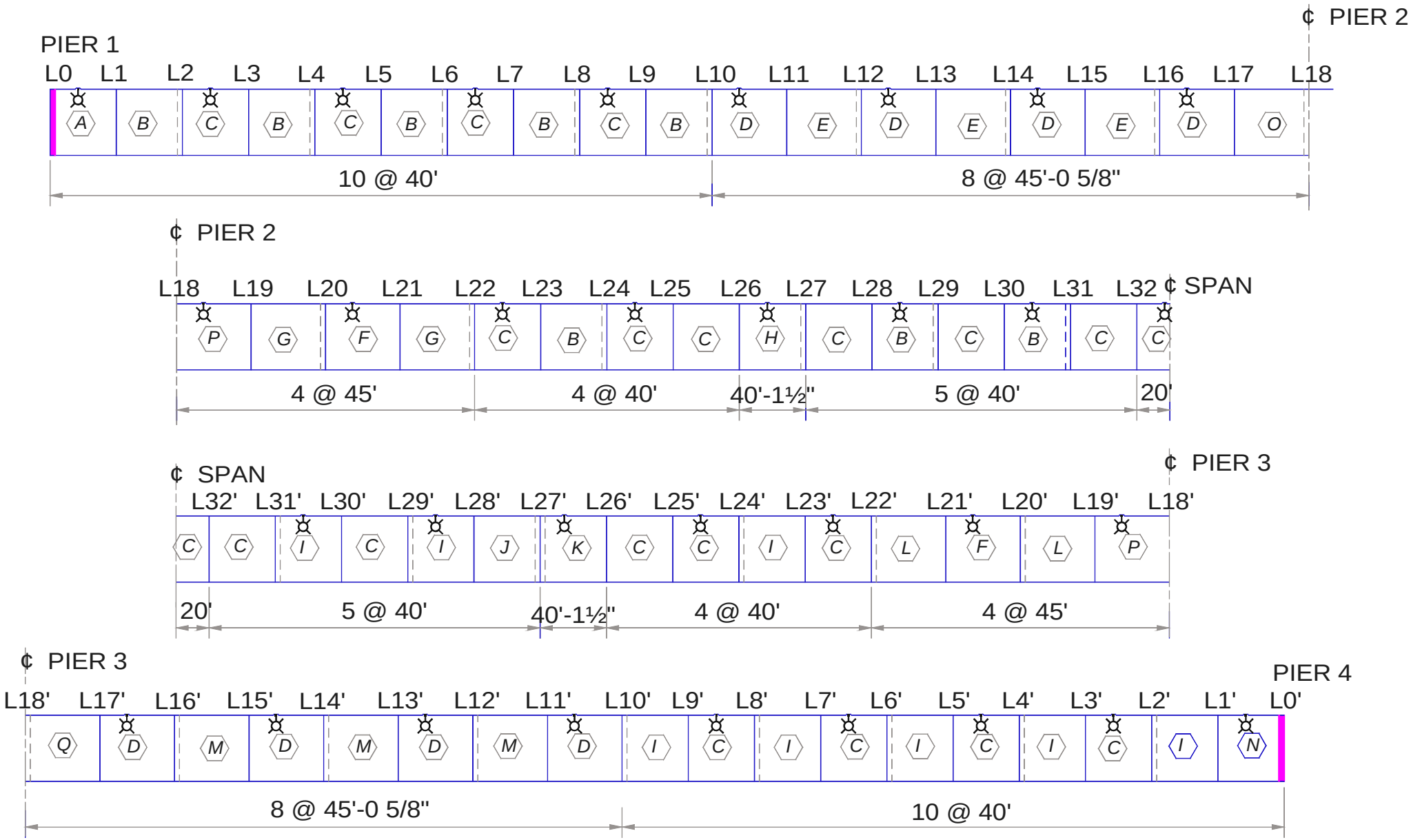

DECK PANEL LAYOUT

MAIN SPAN

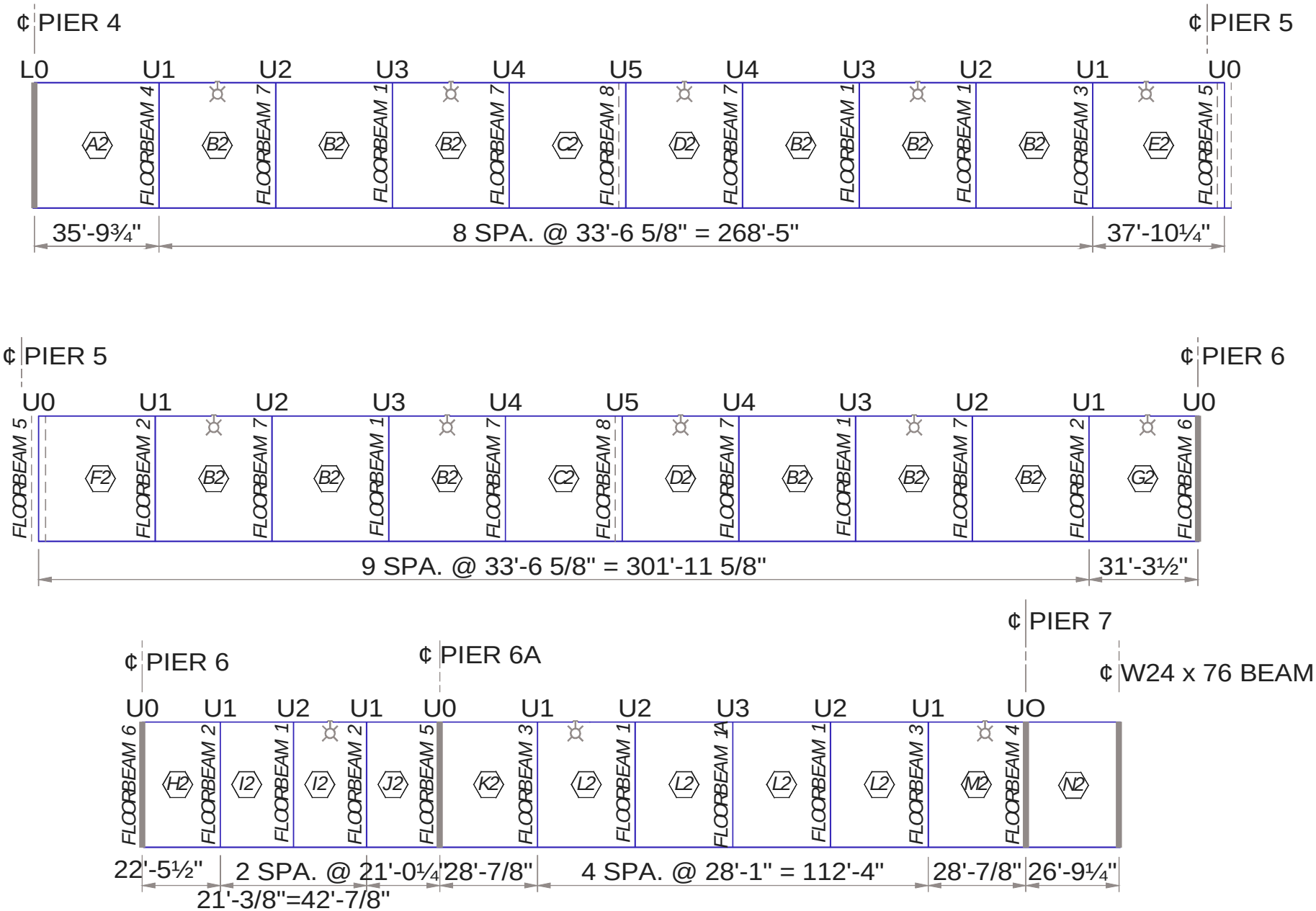

DECK PANEL LAYOUT

OREGON APPROACH

DECK PANEL CONSTRUCTION

Material	Quantity (per cyd)
Portland Cement	600 lb.
Fly Ash	80 lb.
Fine Aggregate	1158 lb.
Coarse Aggregate (utilite)	1114 lb.
Total Water	270 lb.
Air Entrainment (Daravair)	3.2 oz.
Water Reducer (WRDA 64)	34 oz.
H_20/Cement Ratio	0.40
Slump	4 +/- 1”
Unit weight	119 pcf

MAMMOET

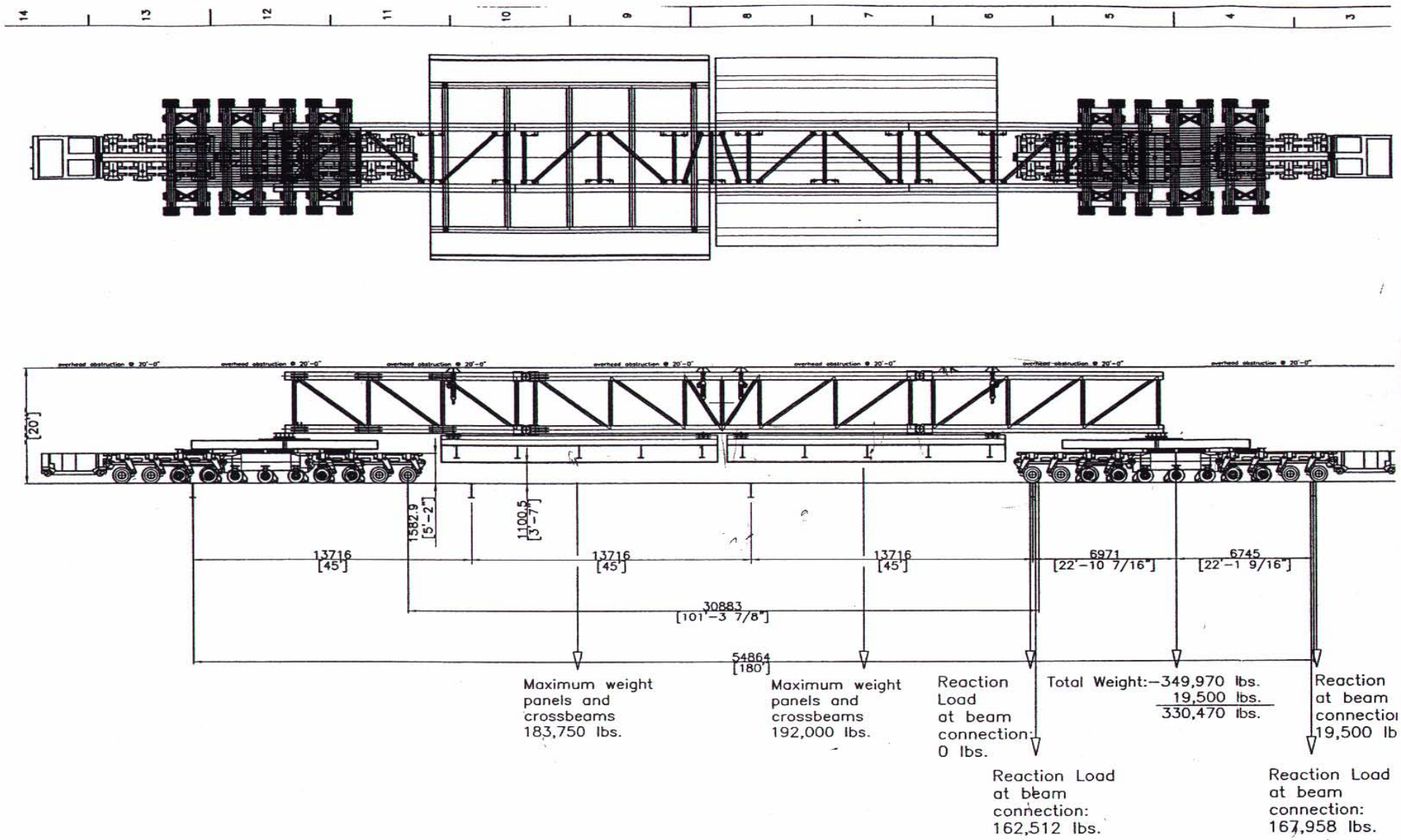
14
13
12
11
10
9
8
7
6
5
4
3
overhead obstruction @ 20'-0"
[20']
1582.9
[5'-2"]
1100.5
[3'-7"]
13716
[45']
13716
[45']
13716
[45']
6971
[22'-10 7/16"]
6745
[22'-1 9/16"]
30883
[101'-3 7/8"]
54864
[180']
Maximum weight panels and crossbeams 183,750 lbs.
Maximum weight panels and crossbeams 192,000 lbs.
Reaction Load at beam connection: 0 lbs.
Total Weight:—349,970 lbs.
19,500 lbs.
330,470 lbs.
Reaction at beam connectio
19,500 lb
Reaction Load at beam connection: 162,512 lbs.
Reaction Load at beam connection: 167,958 lbs.

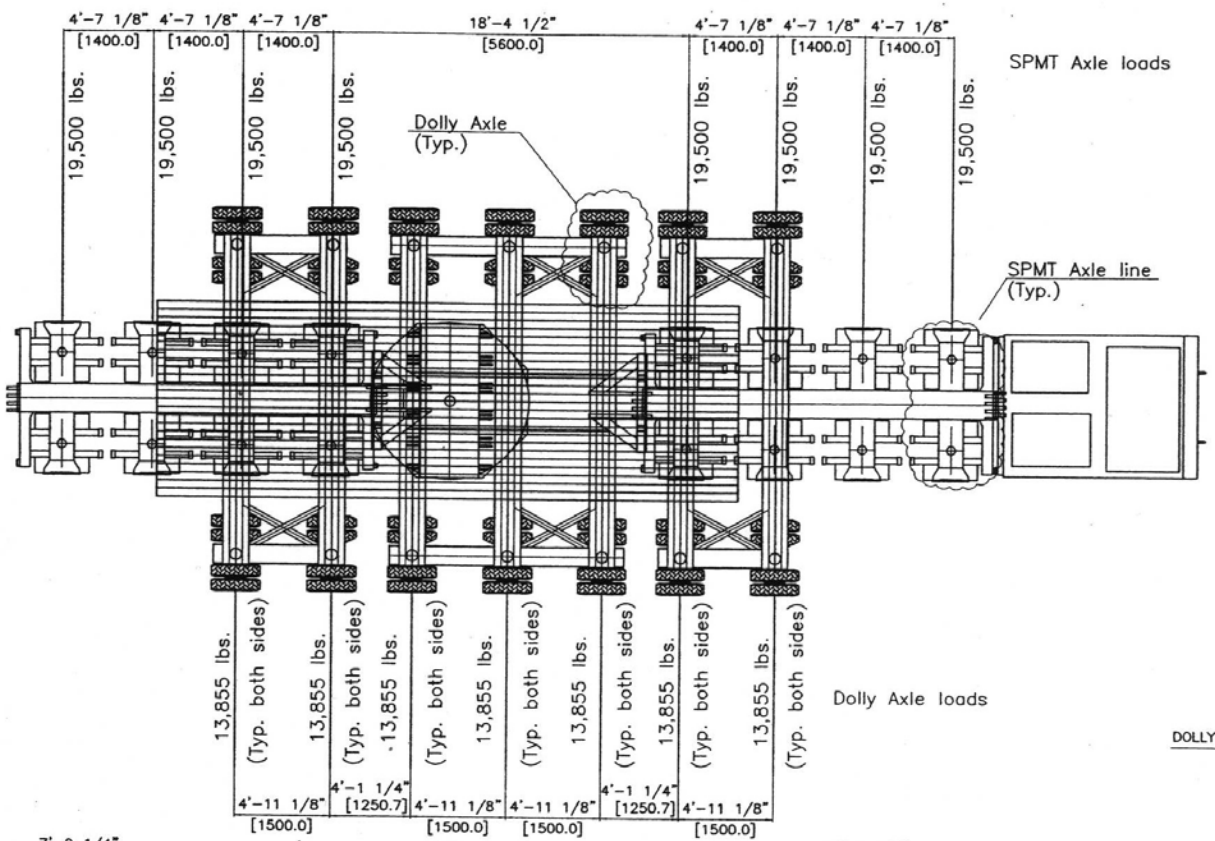

Total Load:

8 x 19,500 lbs. = 156,000 lbs
4 x 13,855 lbs. = 193,970 lbs.
349,970 lbs.

SPMT Axle Line

MAX LOAD/LINE	8.8 Te	19,500 lbs
MAX LOAD/WHEEL	2.2 Te	4,875 lbs
MAX LOAD PER LAT. INCH	0.16 Te	382 lbs

Dolly Axle Line

MAX LOAD/LINE	6.3 Te	13,855 lbs
MAX LOAD/WHEEL	1.6 Te	3,464 lbs
MAXLOAD PER LAT. INCH	0.21 Te	462 lbs

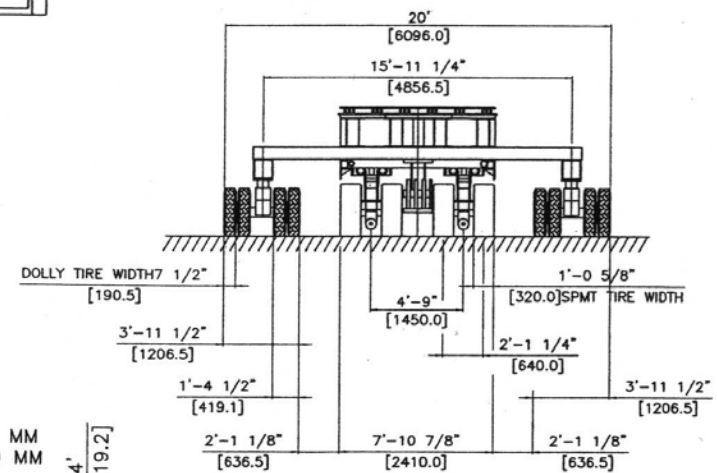

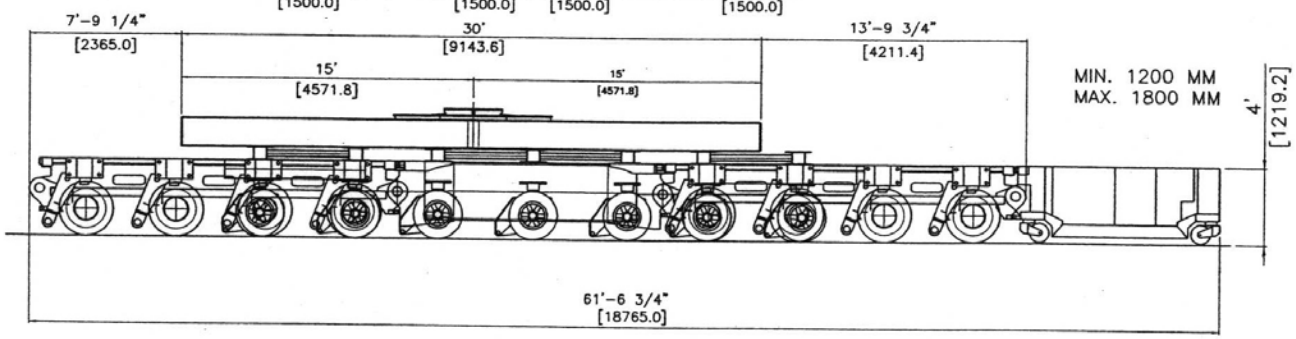

REV.	DESCRIPTION:	DATE:	DRAWN:	CHECKED:	APPROVED:
03	General update	04/22/03	MKC	HdB	PJN

CLIENT: MAX KUNEY COMPANY

PROJECT: LEWIS AND CLARK BRIDGE DECK PANEL MOVE

TITLE: TRAILER LOADINGS ON BRIDGE

VAN SEUMEREN GROUP
MAMMOET
20525 FM 521 Rosharon
Texas 77583
Tel. +1 281 369 2200 / Fax. +1 281 369 2178
www.mammoet.com

THIS PUBLICATION REMAINS THE PROPERTY OF THE PUBLISHER AND SHALL BE TREATED AS CONFIDENTIAL, UNLESS CONTRACTUALLY SPECIFIED OTHERWISE. NO PART OF IT MAY BE REPRODUCED, STORED IN A RETRIEVAL SYSTEM OR TRANSMITTED IN ANY FORM OR BY ANY MEANS, WITHOUT THE PRIOR WRITTEN PERMISSION OF THE PUBLISHER.
©2000 MAMMOET [COSP-02-01-01]

SAP No:

SCALE: N.T.S.

SIZE: B

DRAWING NUMBER

PROJECT No: 0010002508 - DOC.: - PART: D - REV.: G17 - 03

TRANSPORT VEHICLE

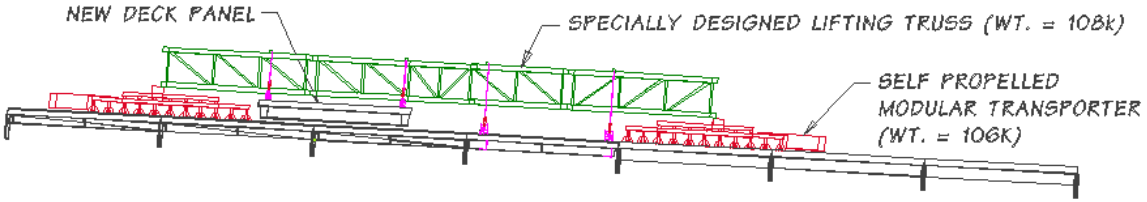

1 BRING IN NEW DECK PANEL. POSITION TRUCK FOR LIFTING OF OLD DECK PANEL.

(TOTAL LOAD = 508k)

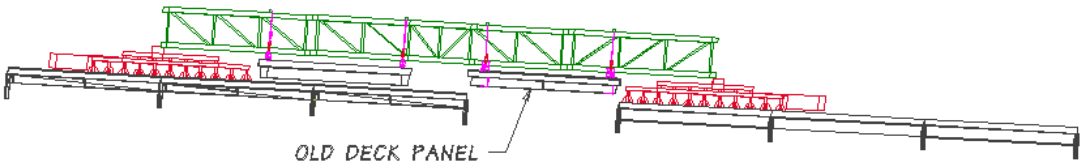

2 LIFT OLD DECK PANEL

(TOTAL LOAD = 700k)

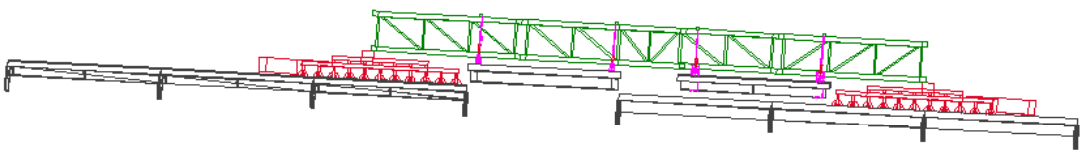

3 MOVE NEW DECK PANEL INTO POSITION FOR PLACEMENT

(TOTAL LOAD = 700k)

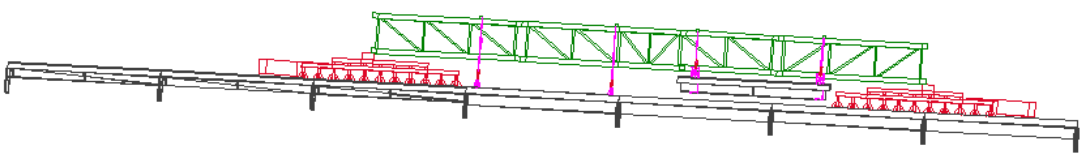

4 PLACE NEW DECK PANEL SECTION

(TOTAL LOAD = 516k)

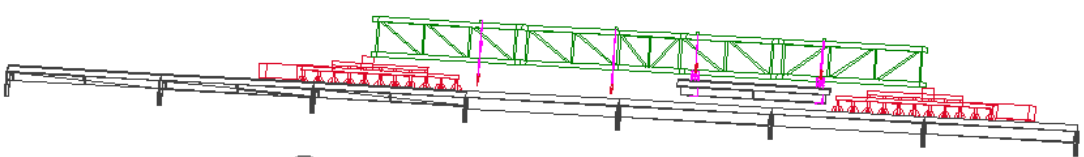

5 DRIVE OFF WITH OLD DECK PANEL

(TOTAL LOAD = 516k)

DECK PLACEMENT SEQUENCE

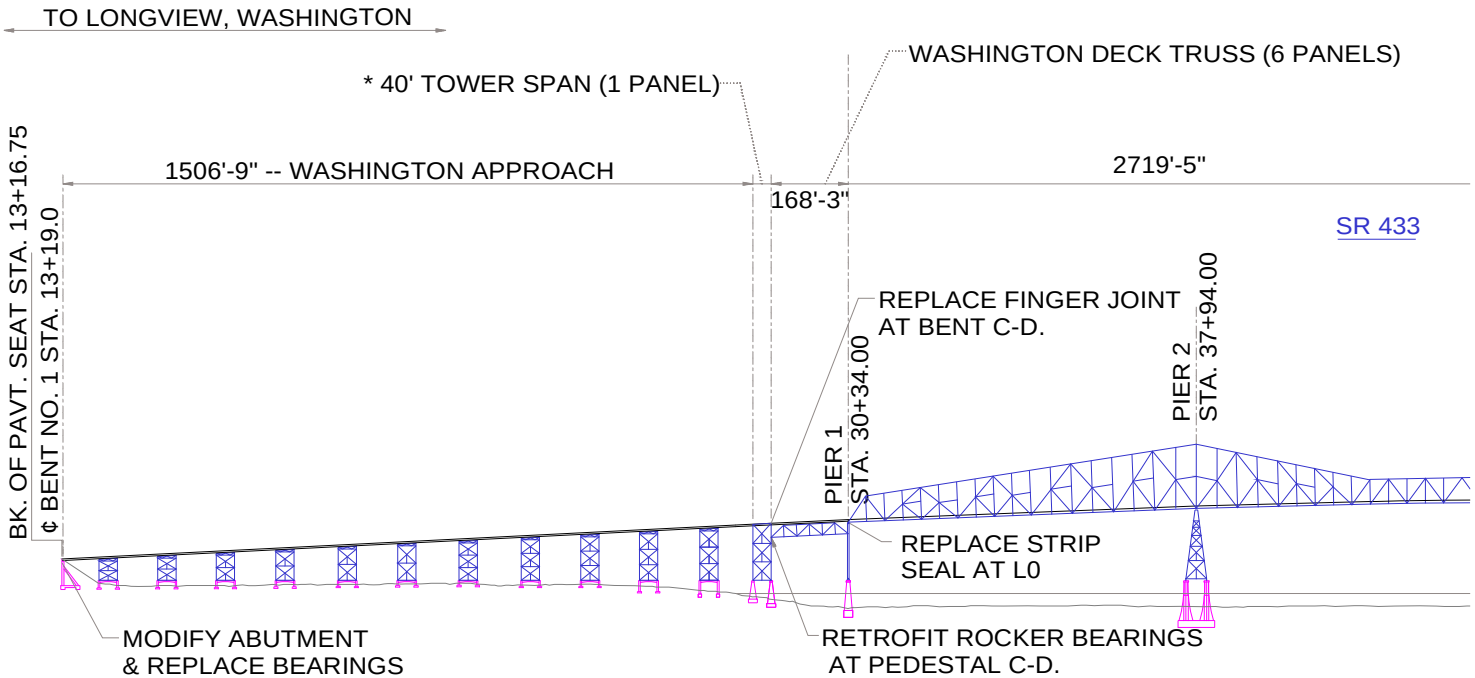

ELEVATION

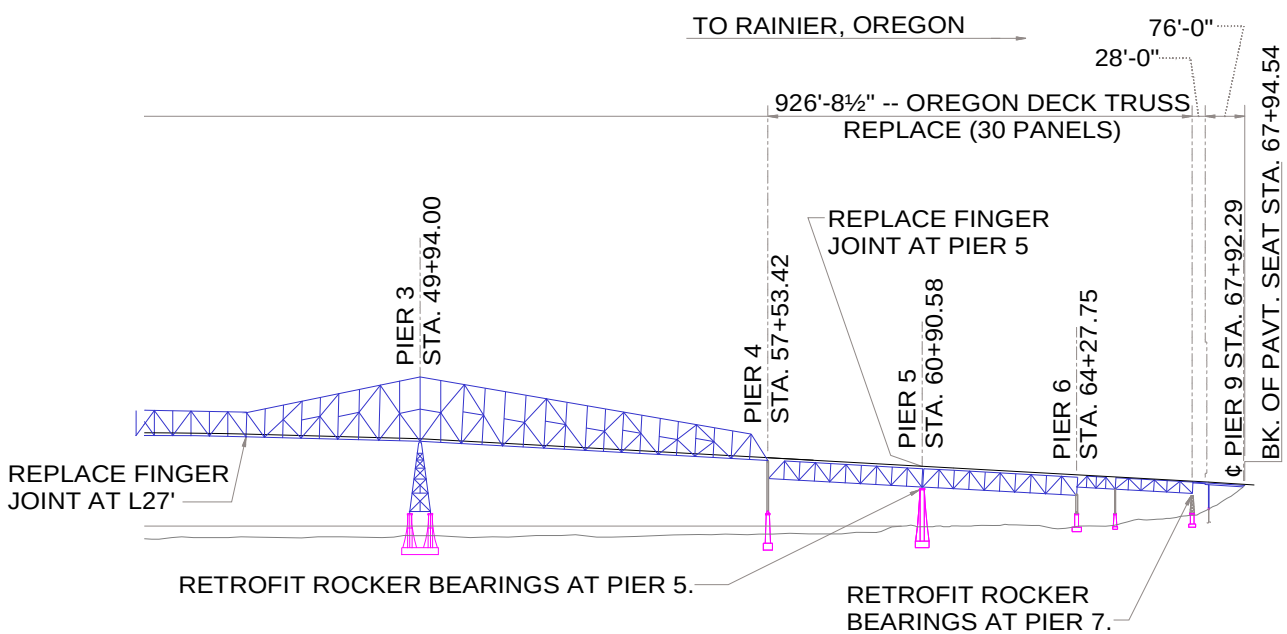

ELEVATION

WASHINGTON APPROACH

WASHINGTON APPROACH EXISTING ROADWAY DECK

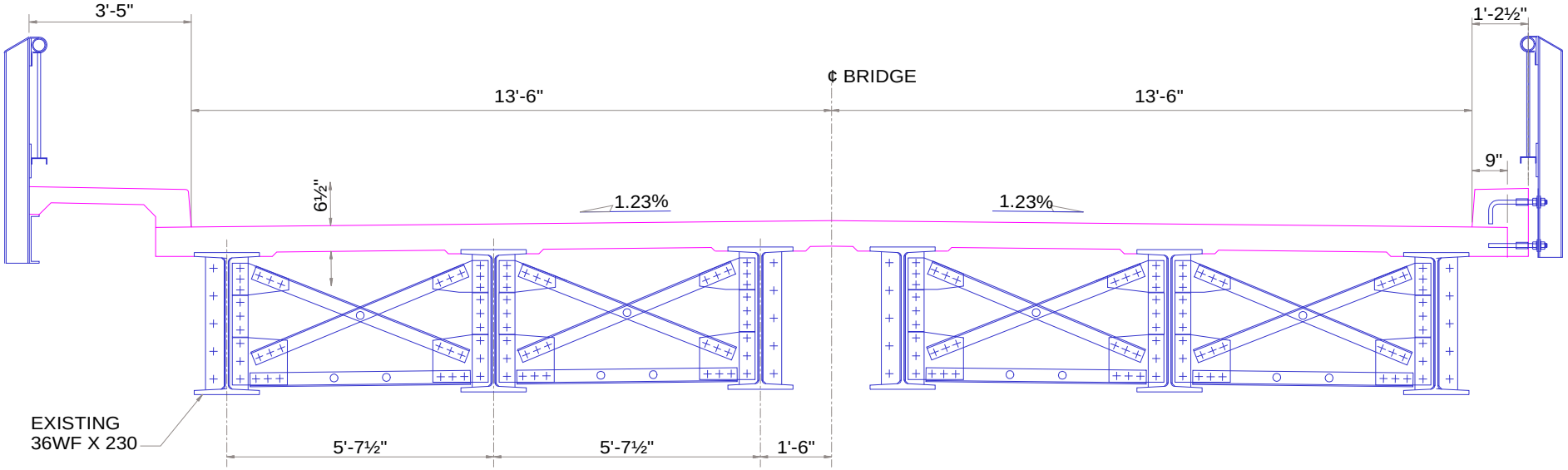

TYPICAL SECTION -- EXISTING CROSS FRAMES AT TOWERS

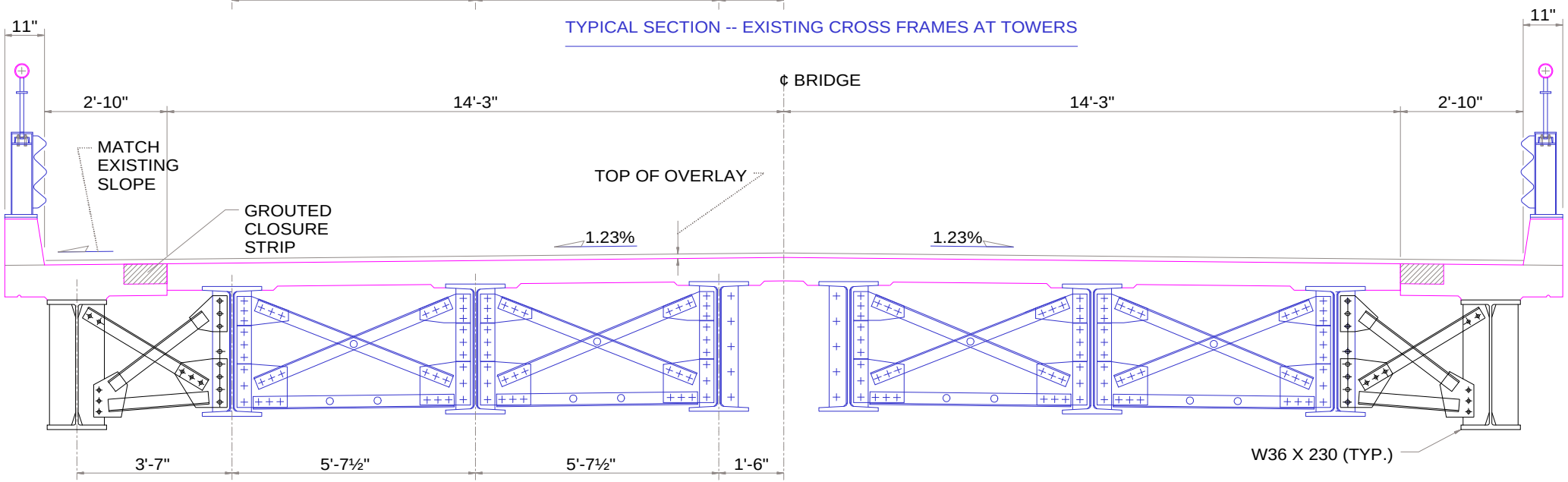

TYPICAL SECTION -- MODIFIED CROSS FRAMES AT TOWERS

WASHINGTON APPROACH WIDENING

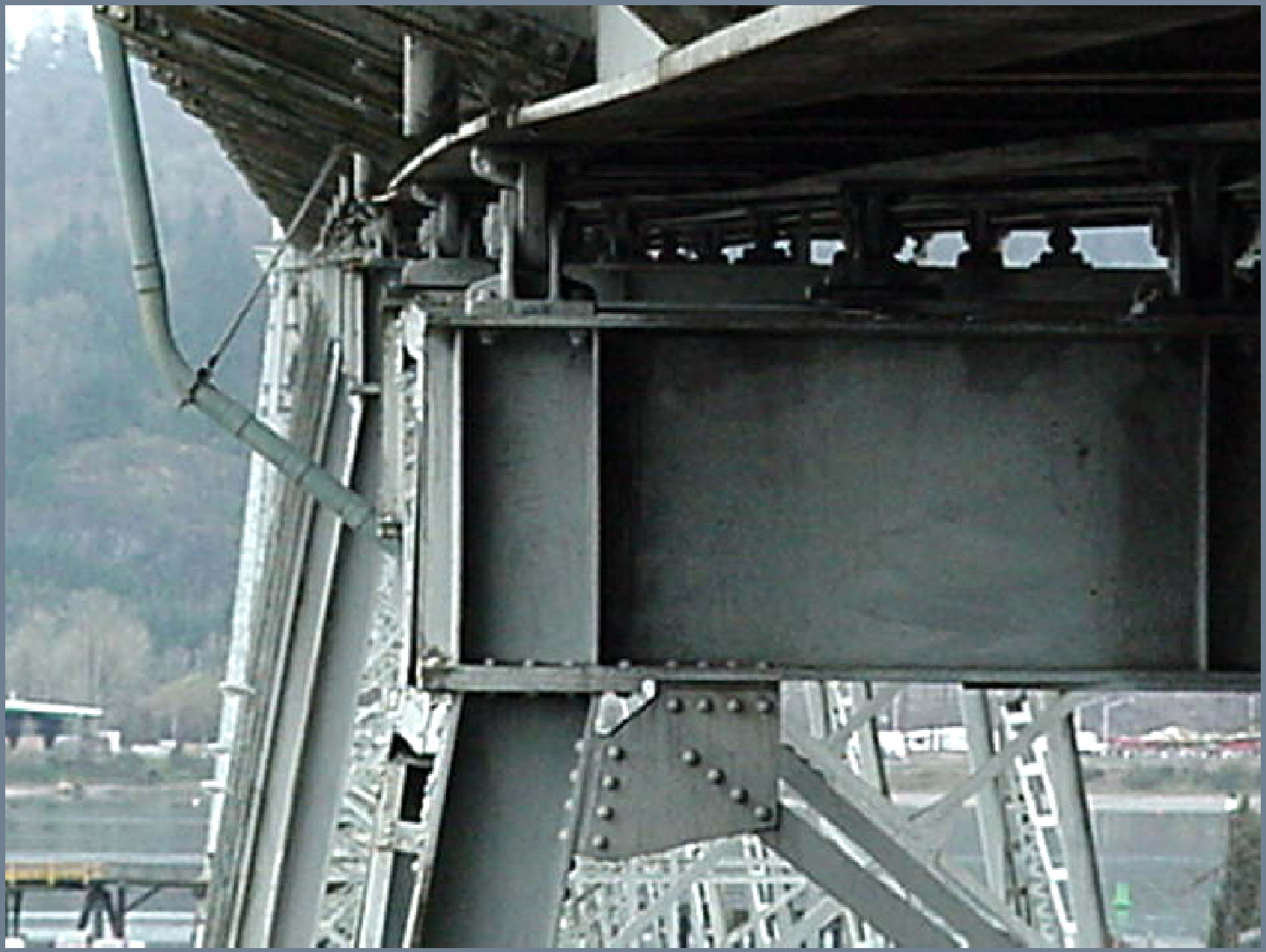

JUL 15 2003

WASHINGTON APPROACH X-BEAM EXTENSION

VT-UT-OK
7-11-03
36

WASHINGTON APPROACH WIDENING FINAL STAGE