A precast Concrete Bridge Bent for Seismic Regions: Achieving both Performance and Constructability

John Stanton
Marc Eberhard

University of Washington

PCI Fall Convention
15 Sept 2009, San Antonio, TX.

Acknowledgments

- FHWA
- WSDOT
- PEER / State of California
- TransNOW

Accelerated Bridge Construction

- Goals:
  - Reduce traffic delays, and associated costs.
  - Reduce fuel wastage.
  - Increase worker safety.
- Potential difficulties:
  - Constructability.
  - Seismic performance.
  - Cost.

Solution: Precast Concrete

- Precast concrete offers the opportunity to:
  - Shorten time for site operations.
  - Improve quality of components.
  - Increase worker safety.
  - Reduce environmental hazards.
- Use of precast concrete:
  - The material of choice for girders.
  - Opportunities for use in bridge bents.

Constructability vs. Performance

- Linear elements are the easiest to handle and transport.
- Connections occur at the intersections of members.
  - Moments are highest there.
  - Inelastic deformations expected.

Seismic Performance

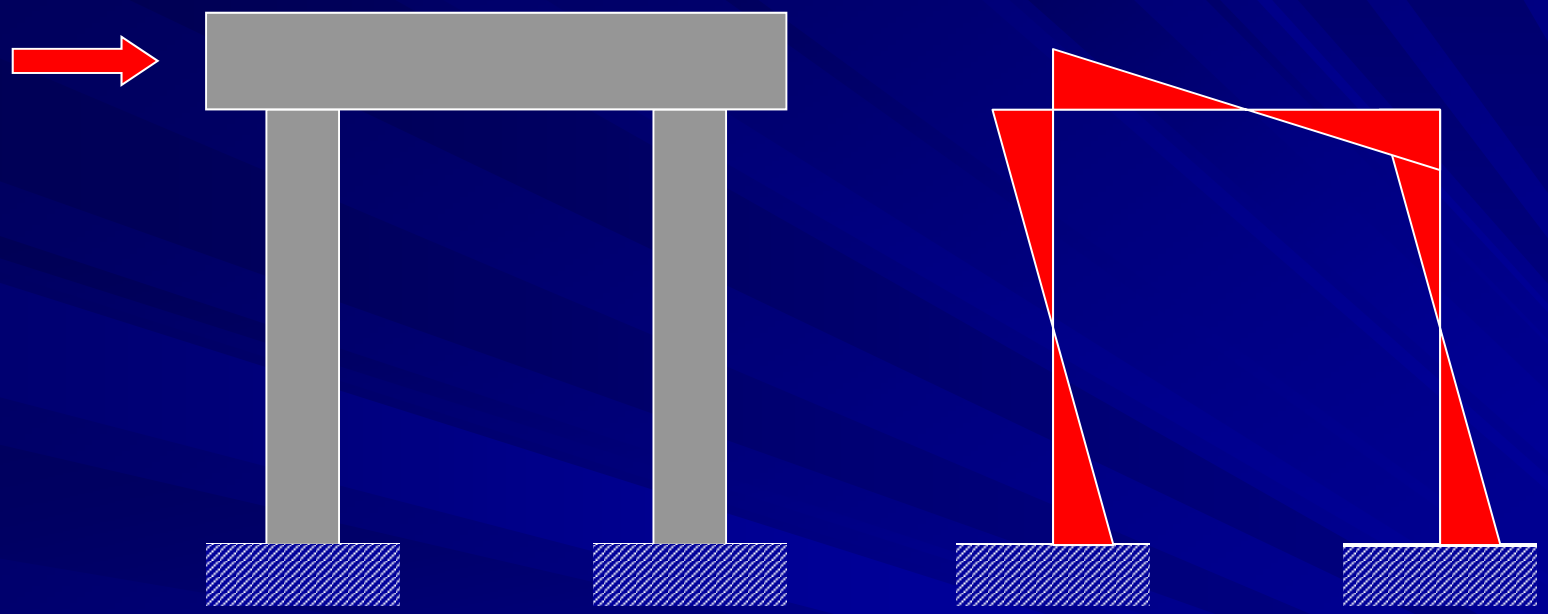

Maximum moments occur at beam-column intersections.

Constructability vs. Performance

- Connections need to:
  - be readily constructible.
  - have good seismic performance.

Precast Concrete Connections using Bars Grouted into Sleeves.

“Many Ducts” Connection

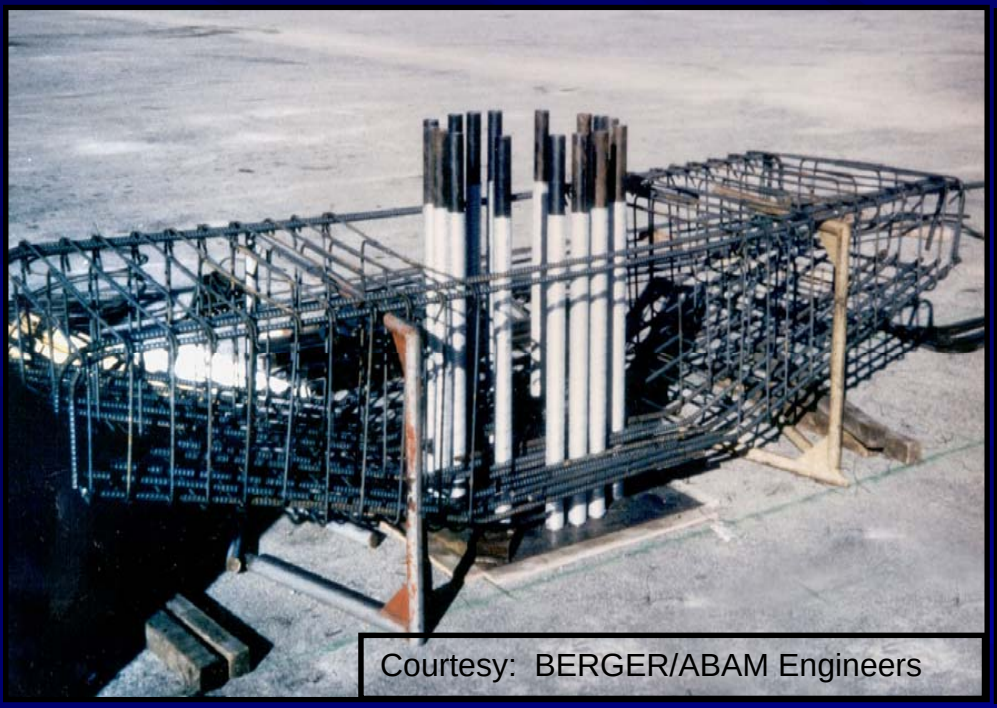

Courtesy: BERGER/ABAM Engineers

Emulates typical c.i.p. connection.

Tight tolerance requirements.

“Large-Bar” Connection

- Concept
  - Larger bars (e.g., #18)
  - Fewer bars (e.g., 6-8)
  - Much larger ducts (e.g., 8-in. dia.)
- Constructability
  - → More generous tolerances
  - → Easier fabrication
  - → Faster alignment

“Large-Bar” Connection

- Suitable for beam-column connection.
- Can be used with single-piece or segmental columns.
- Column configuration depends on circumstances:
  - Column weight (crane size).
  - Column height (stability during erection).
  - etc.

Large-Bar Connection

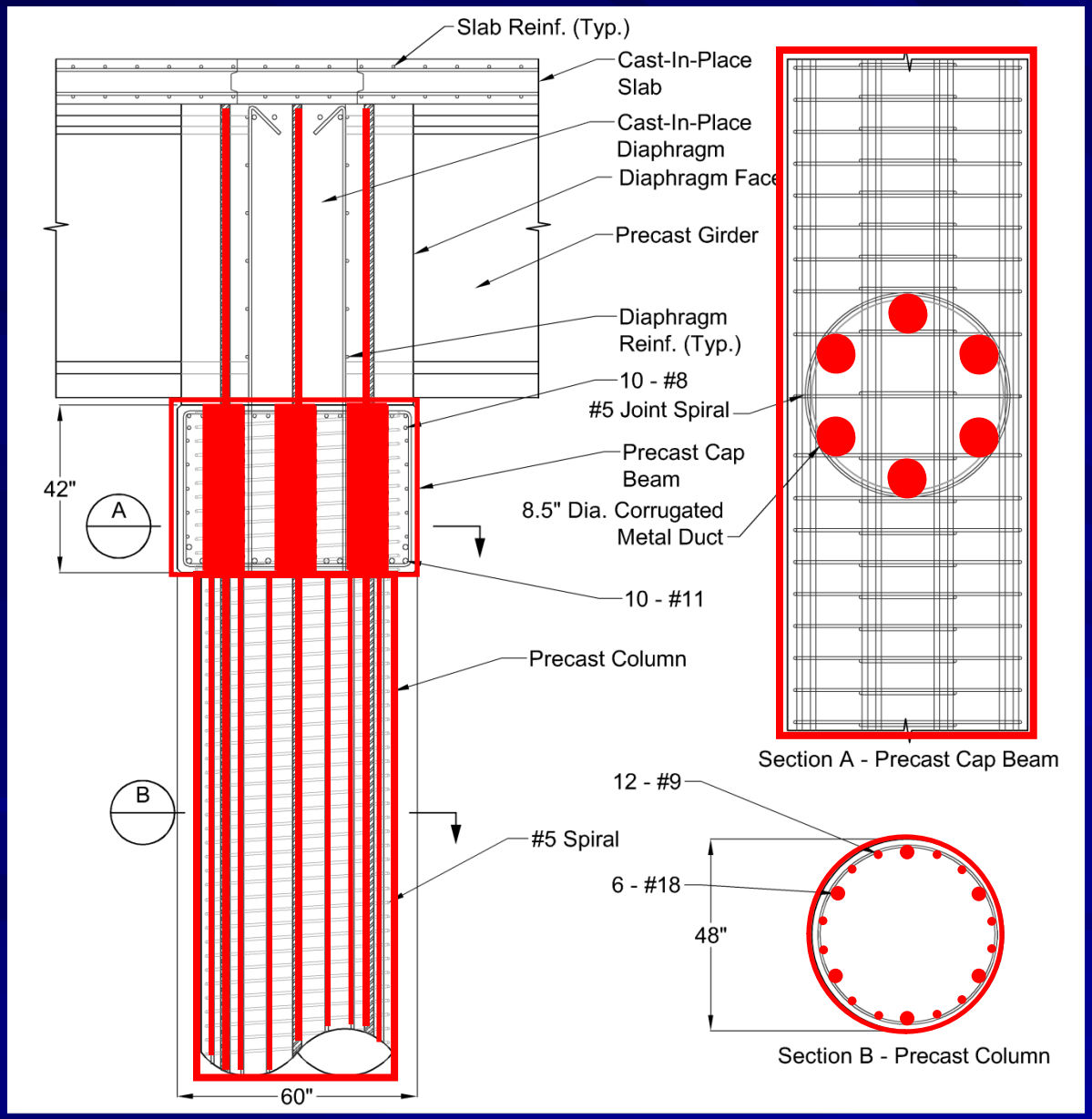

- 4ft Diameter Column
- 5ft x 3.5ft Cap Beam
- 6 # 18 rebar
- 8.5” Corrugated Metal Ducts
- 12 # 9 rebar
- High Strength Grout
- Debond Intentionally?

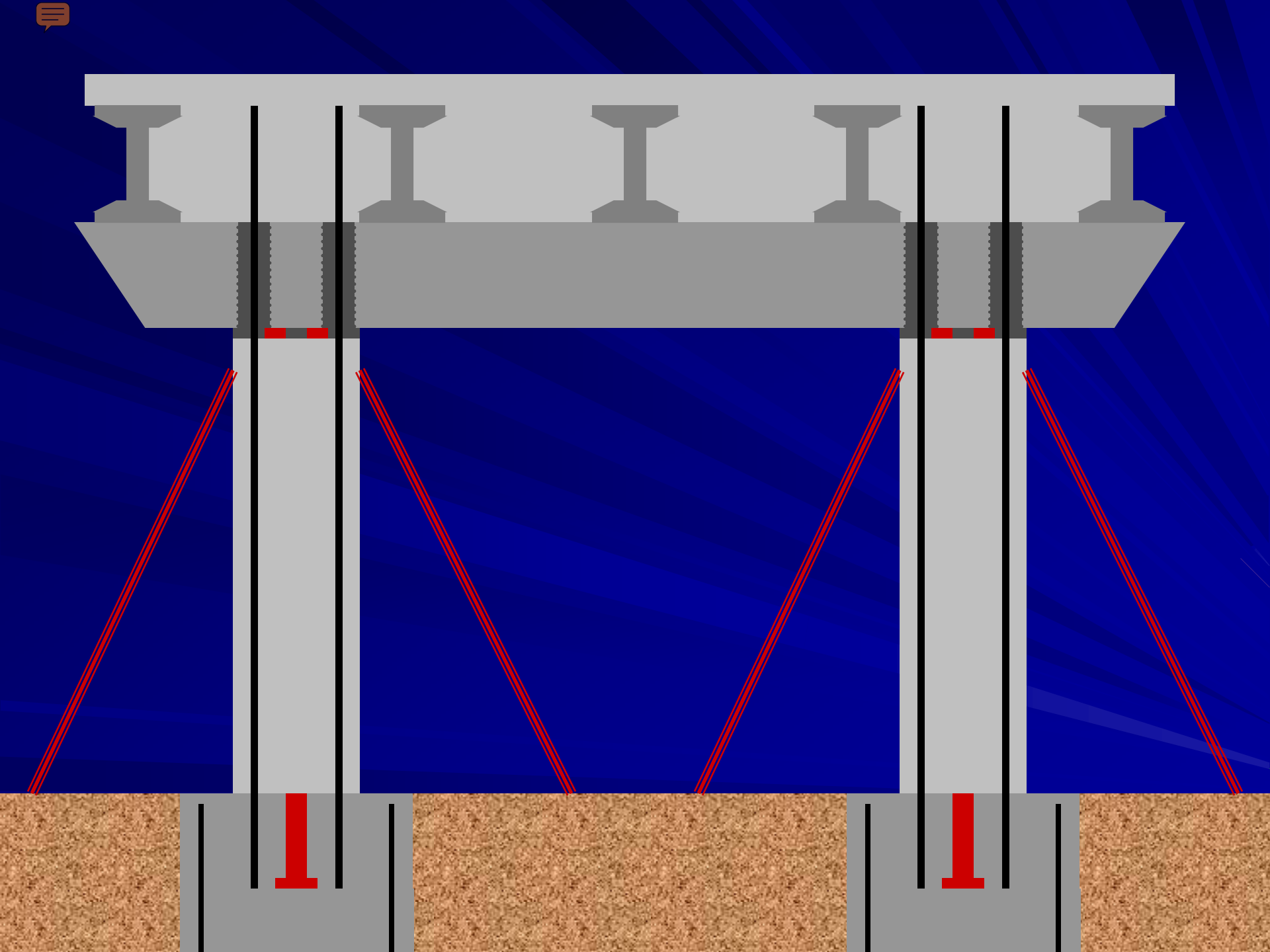

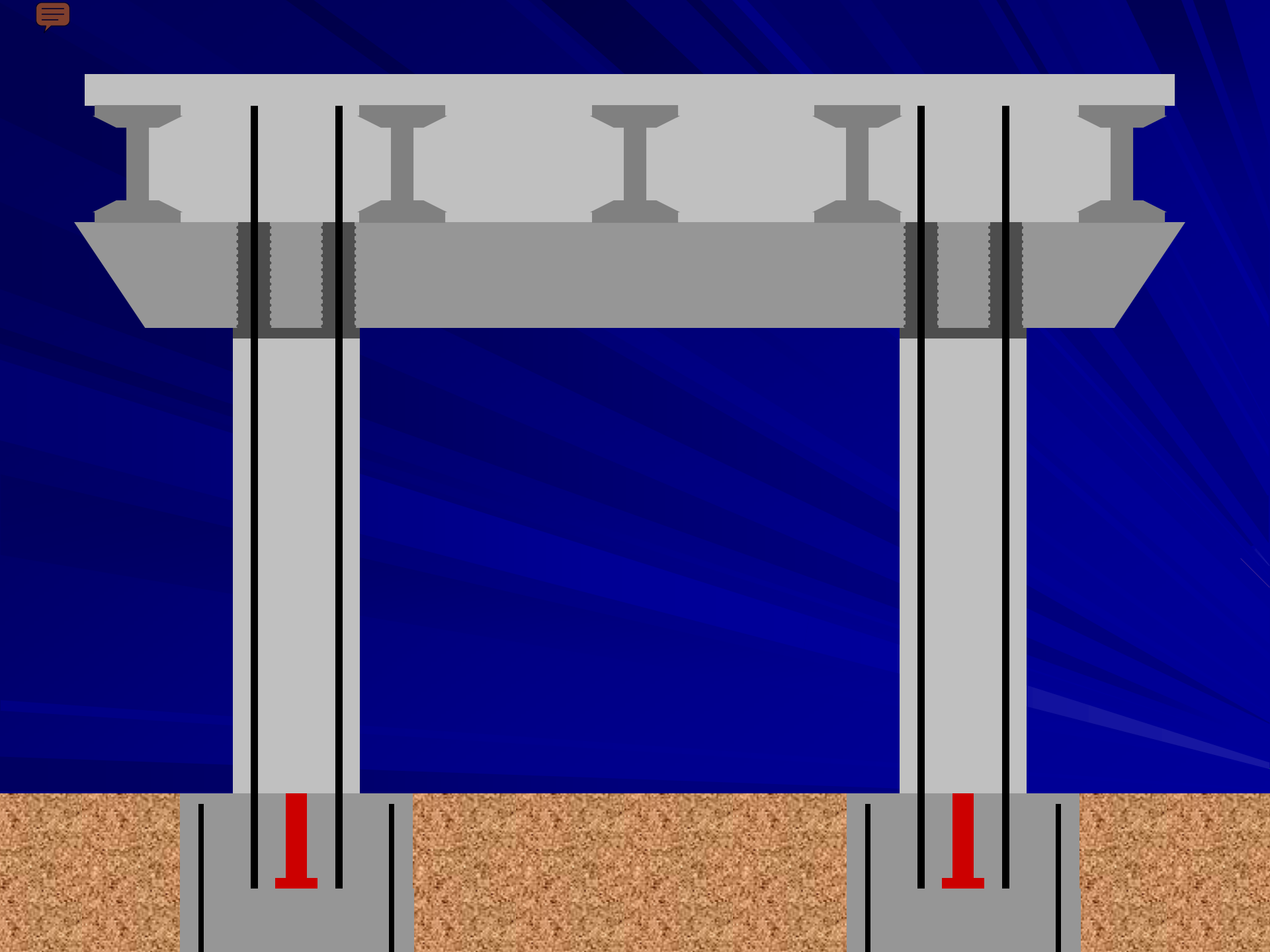

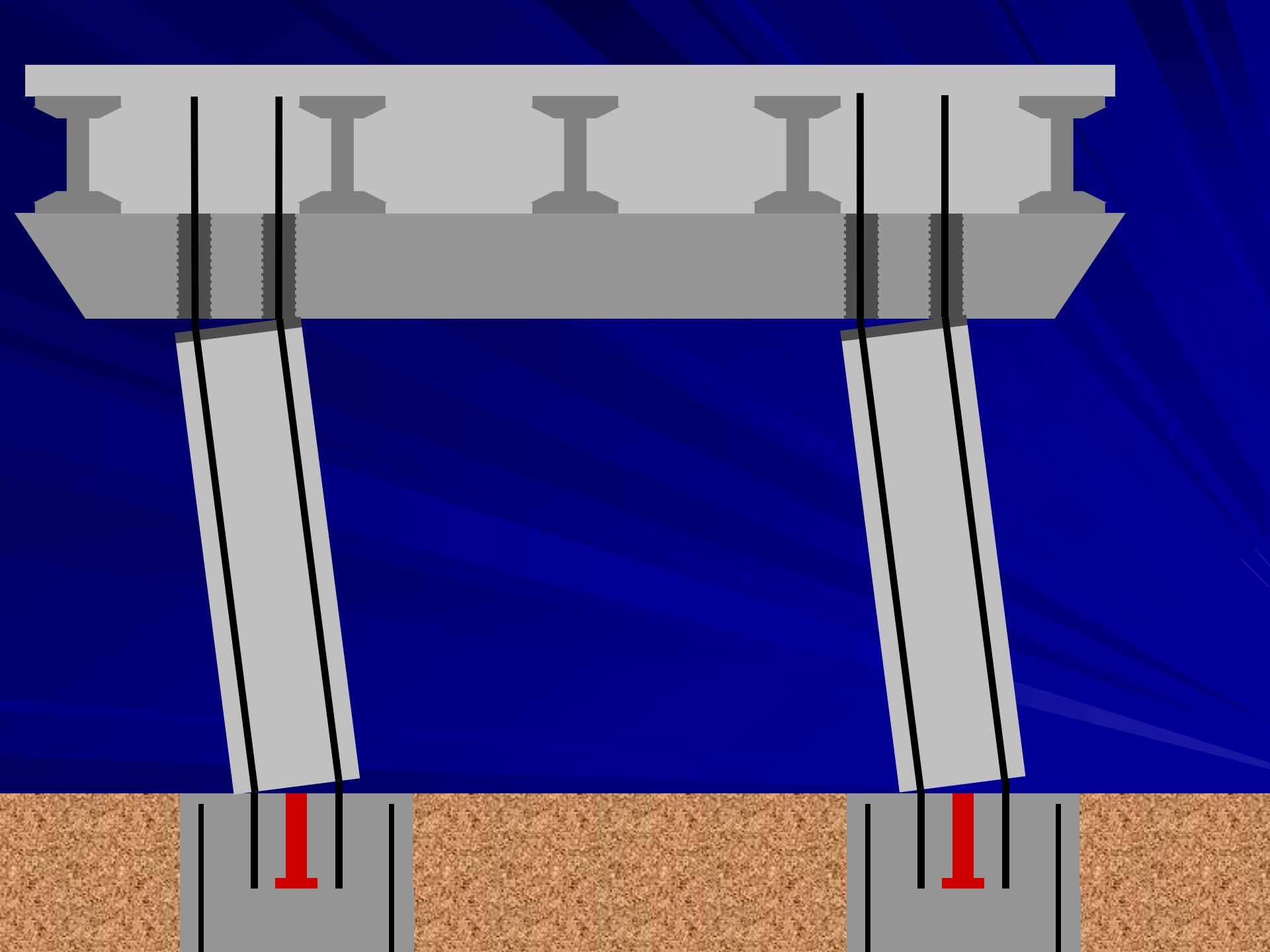

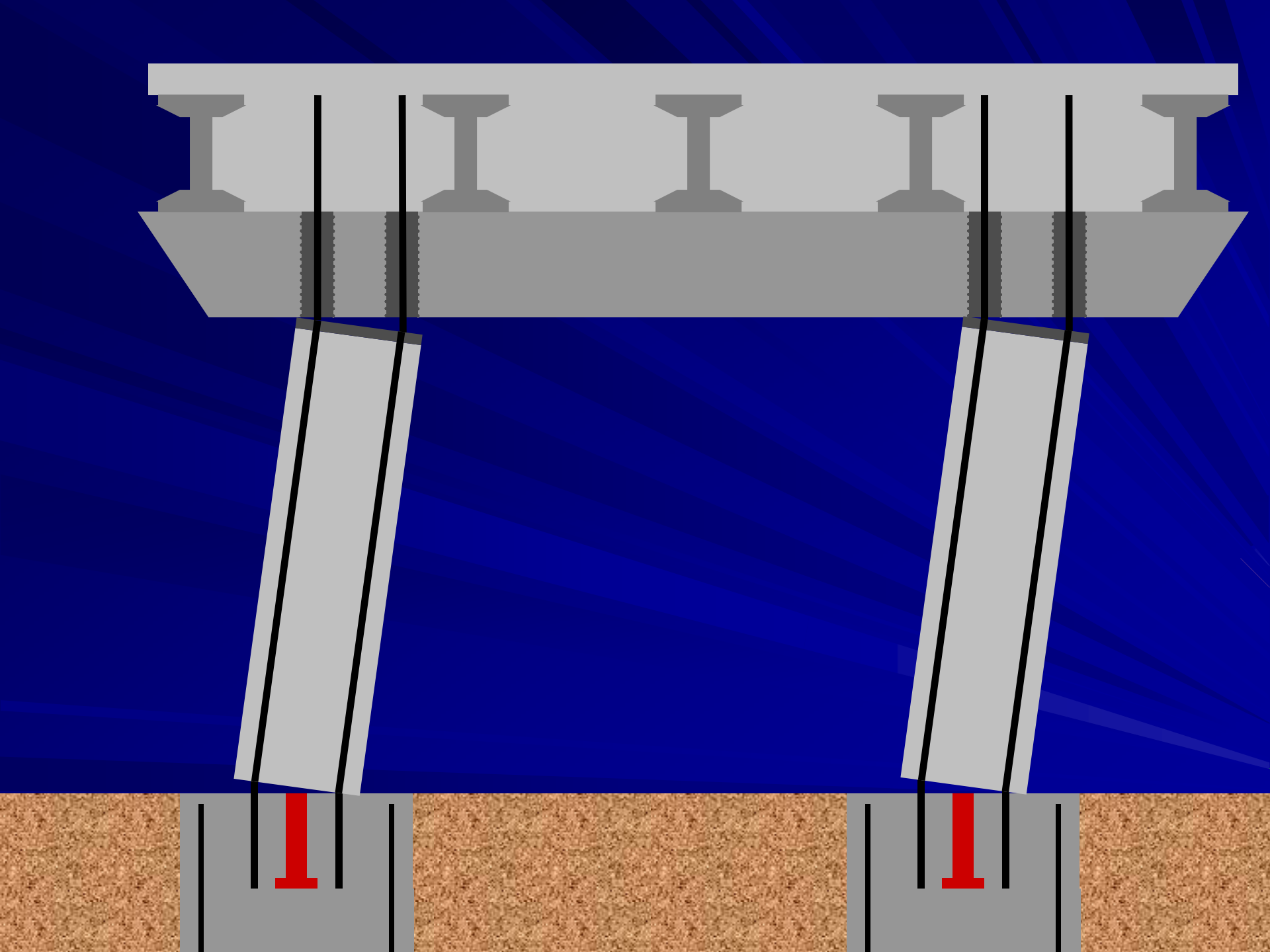

Seismic Performance

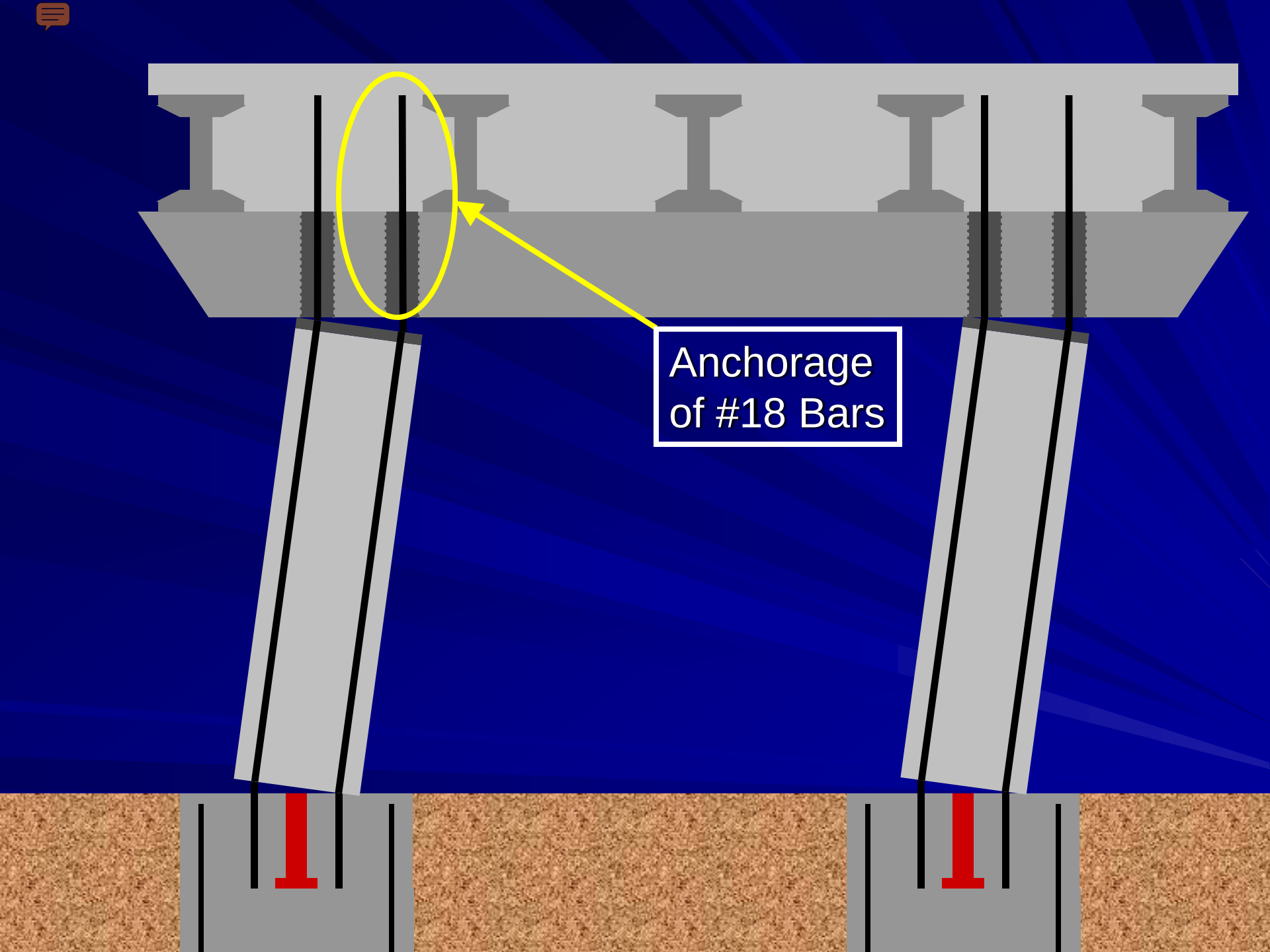
Anchorage
of #18 Bars

Full-Scale Anchorage Tests

Anchorage Test Results.

- #8, #10, #14, #18 bars.
- Behavior determined by L_e/d_b.
  - Low L_e/d_b: bond failure.
  - High L_e/d_b: bar yield and fracture.

Full-Scale Anchorage Tests

Low L_e/d_b (pullout)

High L_e/d_b (fracture)

Full-Scale Anchorage Tests

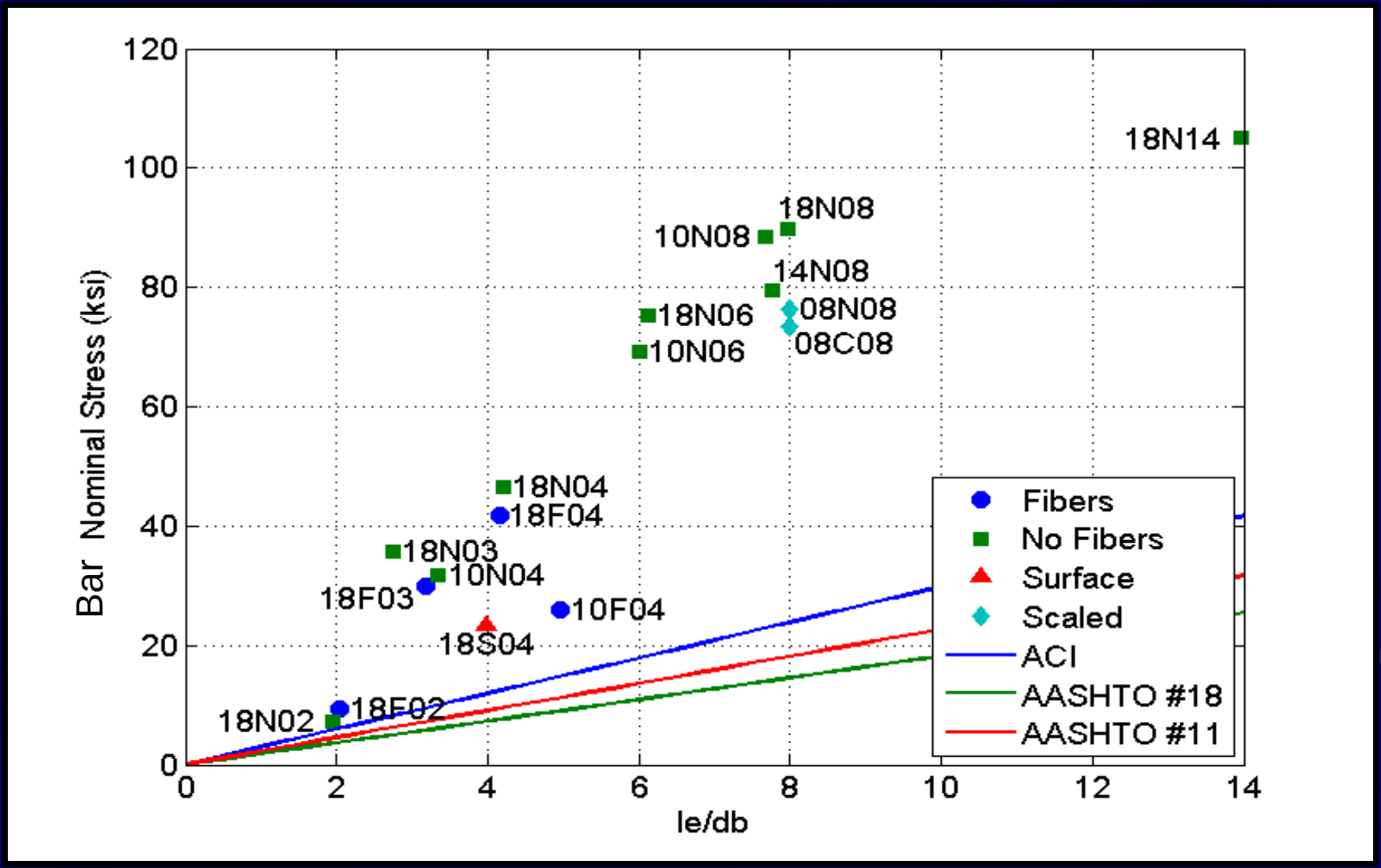

Full-Scale Anchorage Tests

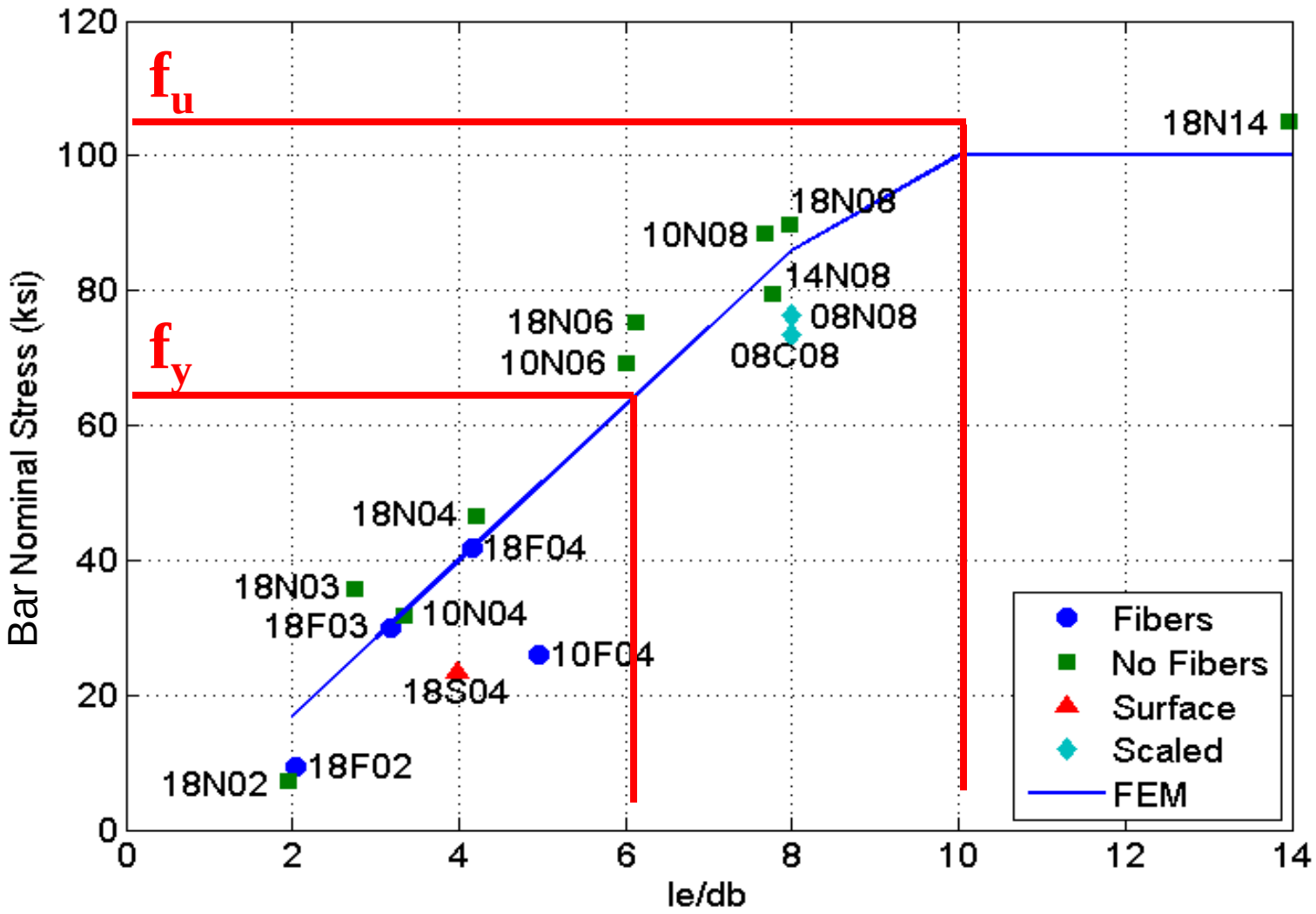

Anchorage Test Results.

- For f_y, need $L_e/d_b \geq 6$
- Bond failure at the bar surface: “confined bond failure”.
- Bond stress = $0.25f_s/(L_e/d_b)$ = 2500 psi = $27\sqrt{f'_g} = 0.31f'_g$.
- Consistent with previous research on smaller bars. (e.g. Raynor, Moustaafa).

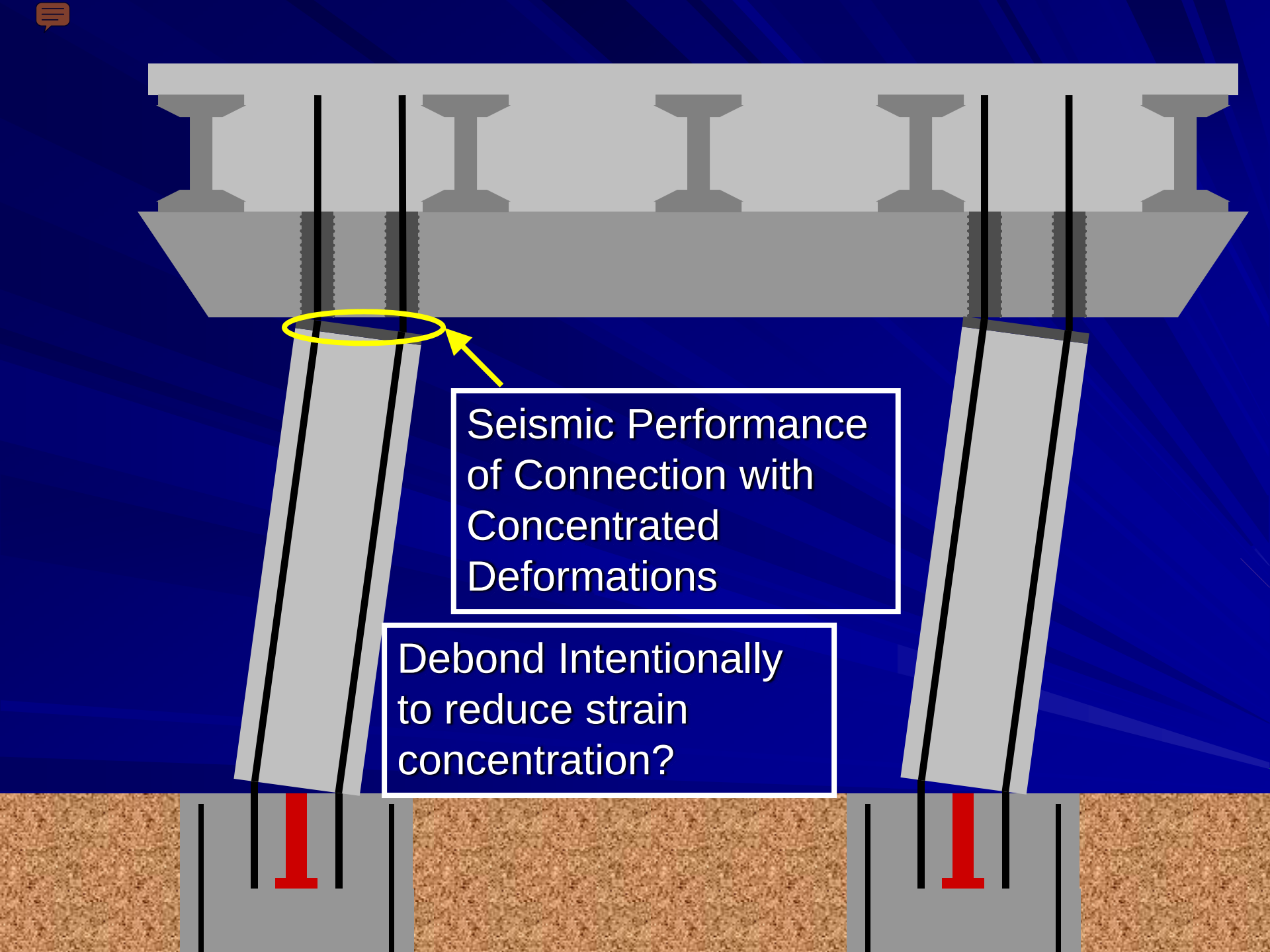
Seismic Performance of Connection with Concentrated Deformations
Debond Intentionally to reduce strain concentration?

Seismic Performance

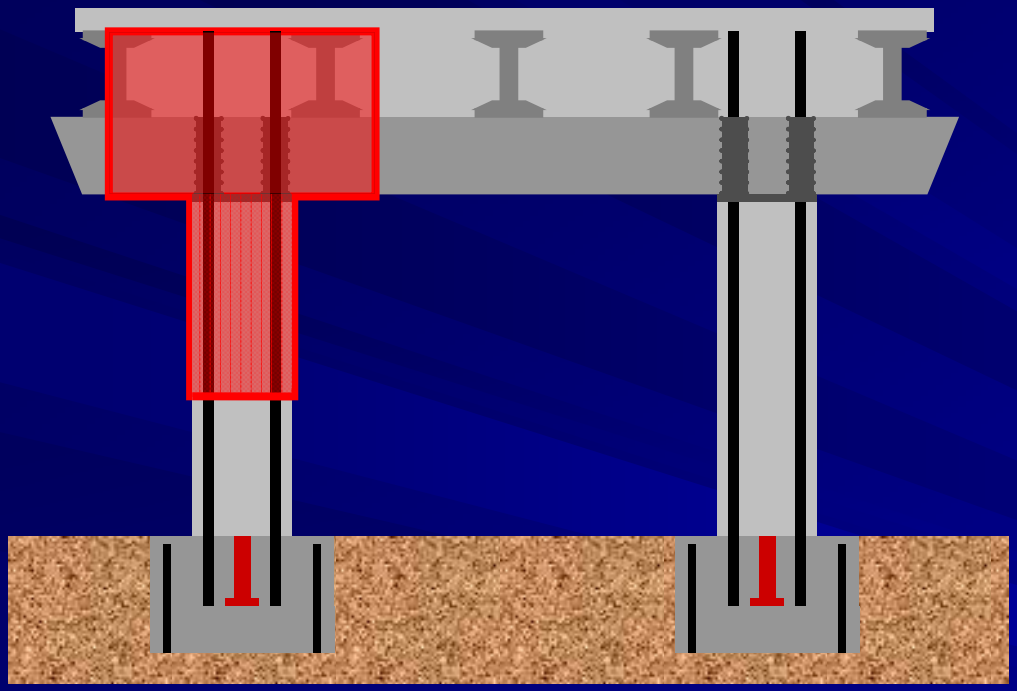

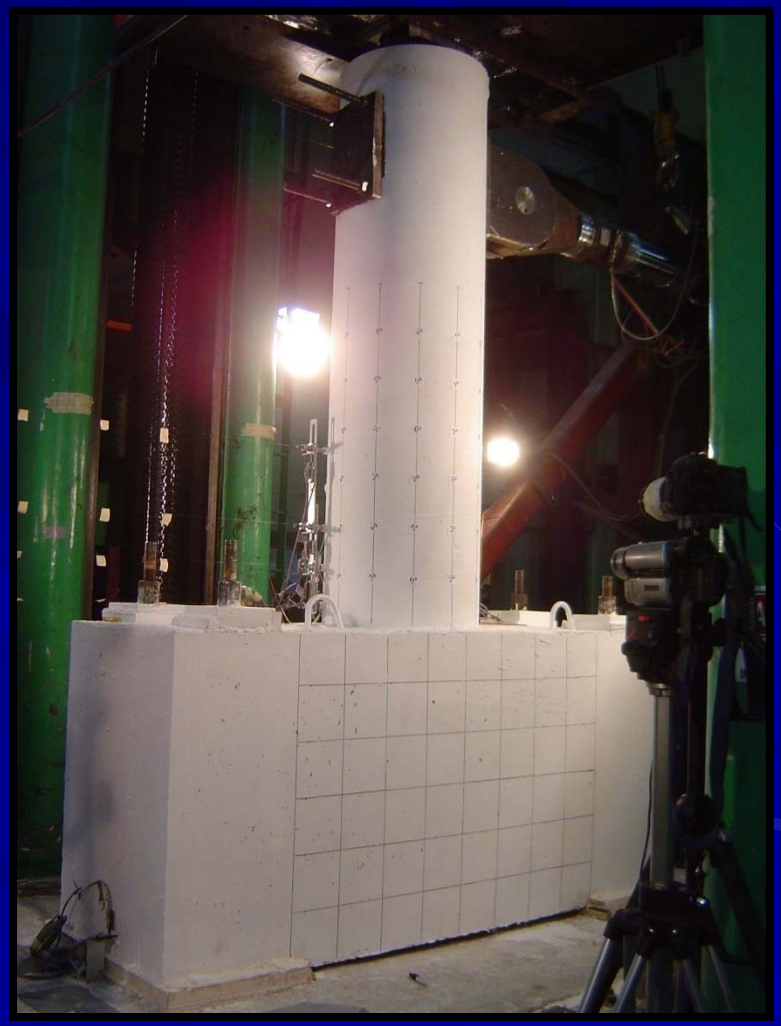

- Lab tests at 42% scale.

Test Matrix

	Longitudinal Reinforcement	Reinforcement Ratio	Grouted Ducts	Debonding ?
REF.	16 - #5	1.58%	No	None
LB-FB	6 - #8	1.51%	Yes	None
LB-D1	6 - #8	1.51%	Yes	Method 1
LB-D2	6 - #8	1.51%	Yes	Method 2

Equivalent Moment vs. Drift

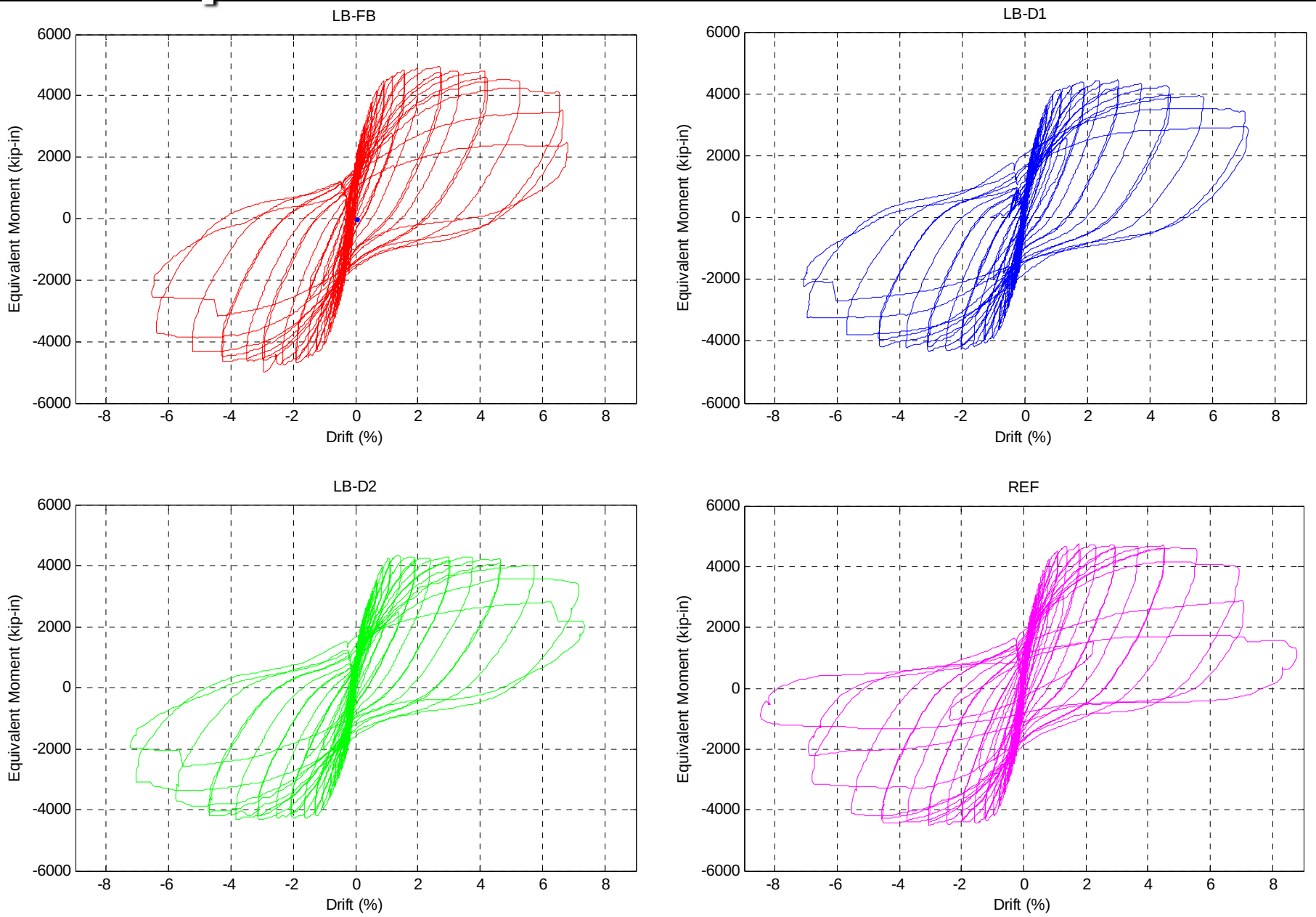

Damage Progression

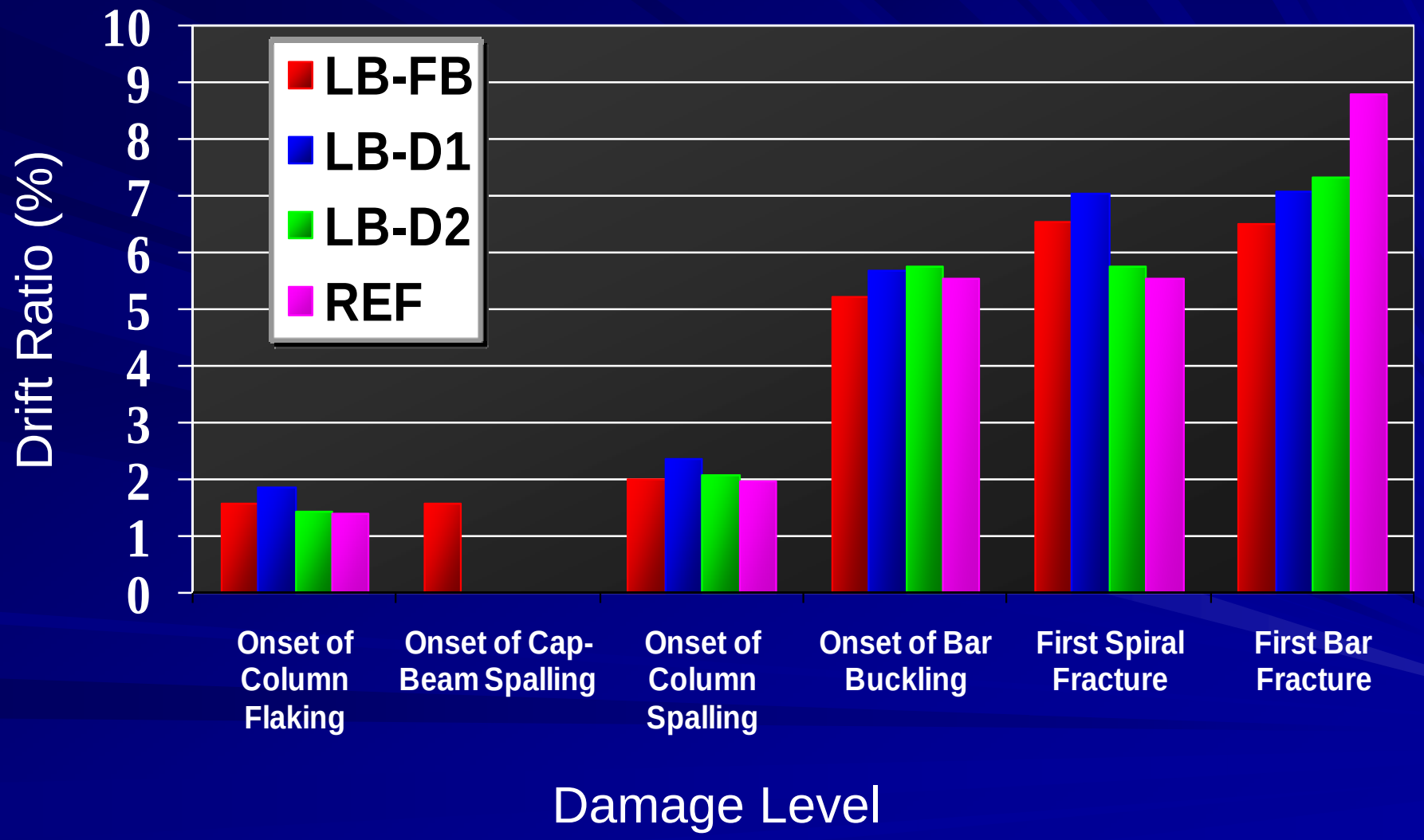

Failure Mechanisms

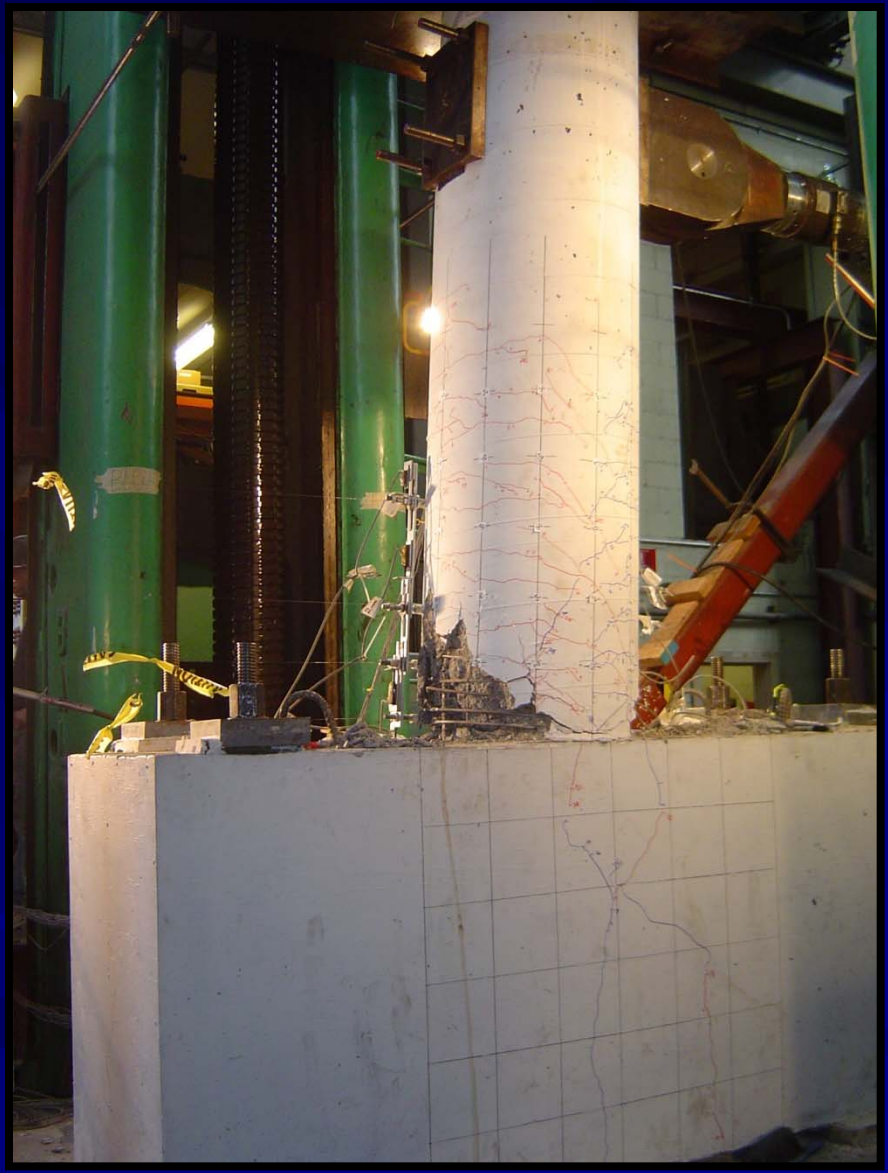

LB-FB: Bar buckling and spiral fracture at 6.5% drift

Implementation

Highways for Life Program: Team Membership.

- FHWA
- BERGER-ABAM
- University of Washington
- WSDOT
- Tri-State Construction
- Concrete Technology Corporation

Highways for Life Program: Tasks.

- Develop suitable connections (Column to cap-beam and footing)
- Lab tests for seismic performance.
- Build the bridge, monitor constructability:
  - Fabricate columns.
  - Erect bents (note skew).
- Develop specification language.
- Prepare design examples.

The Bridge
(SR12 Over I-5)

Connections to be used

- Top: 8#18 in 48” square column.
- Bottom: Still under development. Watch this space!
- Possible footing connections:

Project-Specific Tests

- **PS-1**: PC column grouted over bars in CIP spread footing
- **PS-2:** Spread footing cast around bars projecting from segmental column.

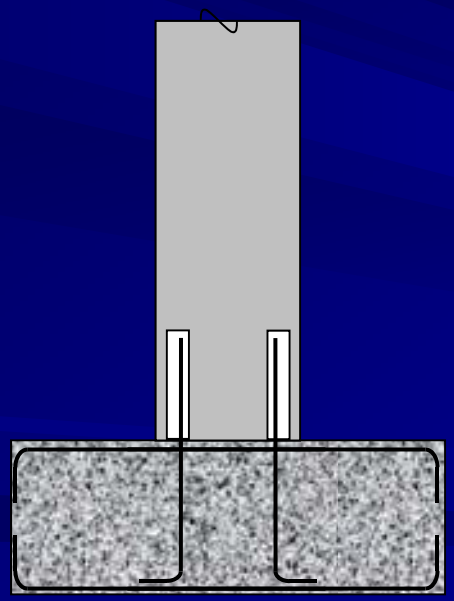

PS-1

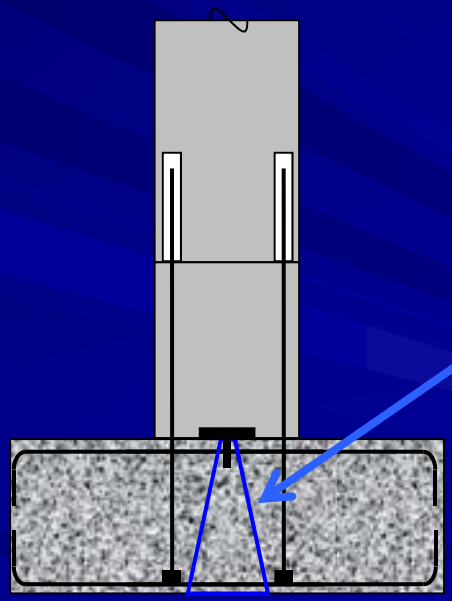

PS-2

Increased Versatility

- AD-1a &1b: Hollow Columns
- AD-2: Connection to Drilled Shaft

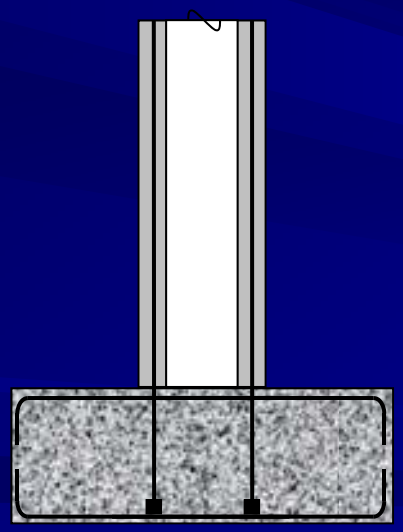

AD-1a

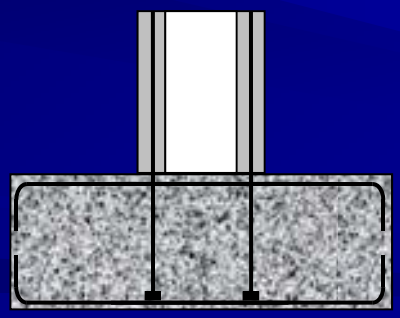

AD-1b

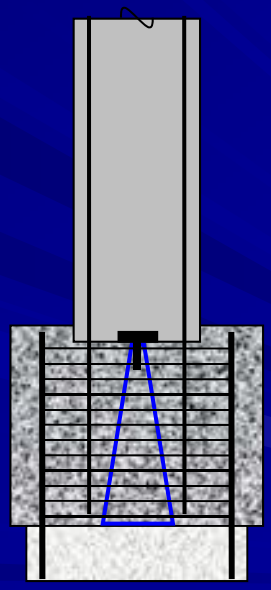

AD-2

Conclusions

- Large-Bar precast systems can be constructed rapidly.
- Many possible variants for footing connection.
- Seismic performance similar to c.i.p.

FASHION MOKA
FASHION MOKA
722-NFU