HAR SIGN WIRING

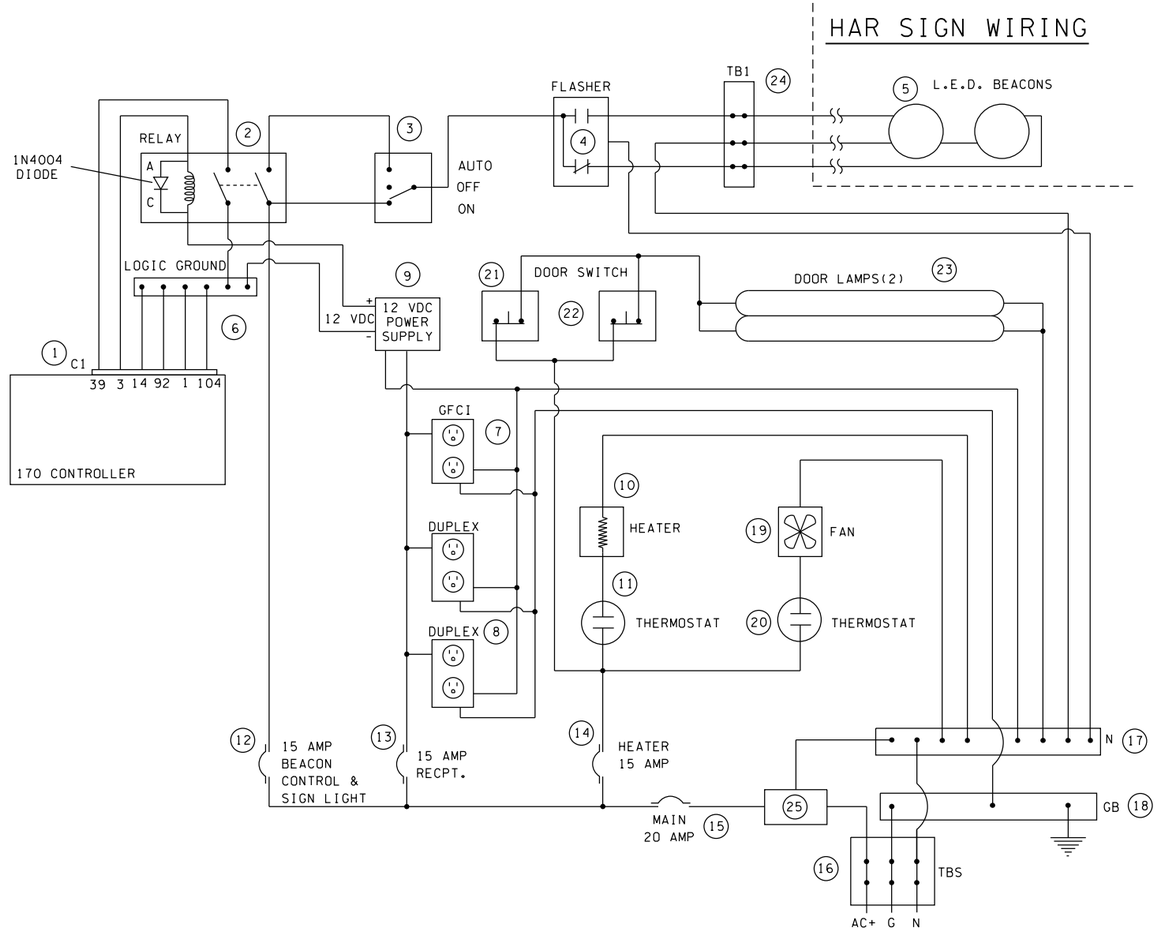

HAR SIGN CABINET DETAIL WIRING DIAGRAM

1. 170 CONTROLLER
2. DPDT 12V DC 100mA RELAY 10A CONTACTS
3. DPDT 10A CENTER OFF TOGGLE SWITCH
4. FLASHER UNIT
5. L.E.D. BEACON LAMPS
6. LOGIC GROUND BUS
7. GFCI OUTLET DUPLEX RECEPTACLE
8. EIA DUPLEX RECEPTACLE
9. 12VDC LINEAR POWER SUPPLY: POWER-ONE HB12-1.7-A
10. 100 WATT STRIP HEATER
11. THERMOSTAT, 50°F CLOSURE
12. 15 AMP BEACON BREAKER
13. 15 AMP RECEPTACLE BREAKER
14. 15 AMP HEATER BREAKER
15. 20 AMP MAIN BREAKER
16. POWER TERMINAL BLOCK
17. NEUTRAL BUS, COPPER
18. COPPER GROUND BUS
19. COOLING FAN
20. THERMOSTAT, 70°F CLOSURE
21. FRONT DOOR SWITCH (10 A), N.C.
22. REAR DOOR SWITCH (10 A), N.C.
23. FRONT AND REAR CABINET LAMP
24. FIELD TERMINAL BLOCK (10 POSITION 20 AMP)
25. SURGE SUPPRESSOR AND FILTER

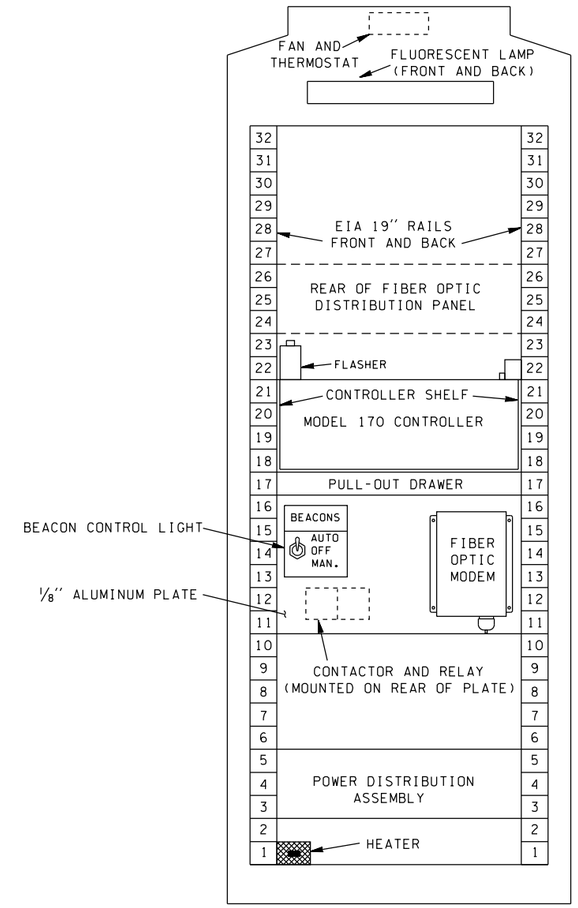

HAR SIGN CABINET RACK ELEVATION - FRONT VIEW

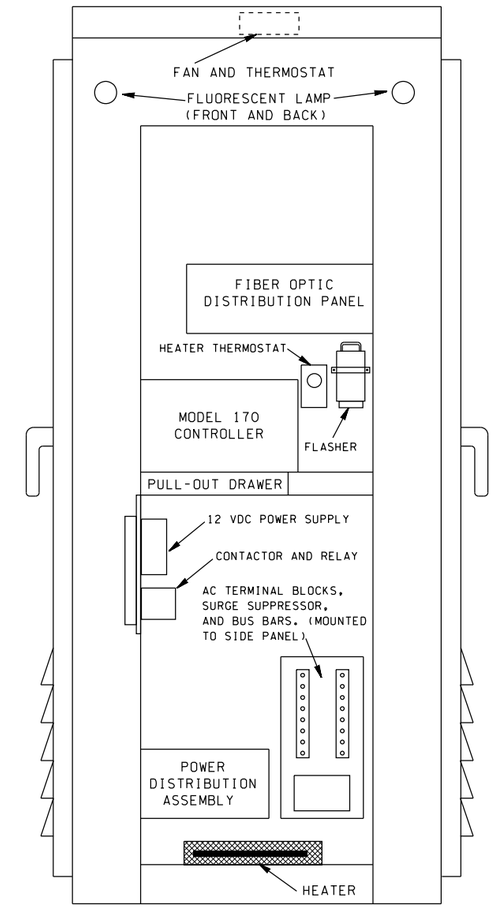

HAR CABINET - SIDE VIEW

HAR SIGN CABINET DETAIL

MASTER DETAIL REVISED 07/12/11

FILE NAME	C:\Users\tranp\AppData\Local\Microsoft\Windows\Temporary Internet Files\Content.Outlook\W6207OZJ\HAR.DGN					
TIME	10:51:57 AM			REGION NO. 10	STATE WASH	FED.AID PROJ.NO.
DATE	2/5/2015					
PLOTTED BY	tranp			JOB NUMBER		
DESIGNED BY						
ENTERED BY						
CHECKED BY				CONTRACT NO.		LOCATION NO.
PROJ. ENGR.						
REGIONAL ADM.		REVISION	DATE	BY		

P.E. STAMP BOX DATE

P.E. STAMP BOX DATE

Washington State Department of Transportation

Plot 7

SHEET OF SHEETS

NOTES

1. SEE STANDARD PLAN G-24.60-02 FOR POST INSTALLATION DETAILS.
2. SEE SIGN SPECIFICATIONS FOR ADDITIONAL INFORMATION.
3. SEE STANDARD PLAN G-25.10-1 FOR STEEL SIGN SUPPORT FOUNDATION DETAIL.
4. SEE STANDARD PLAN J-12 ELECTRICAL DETAILS.

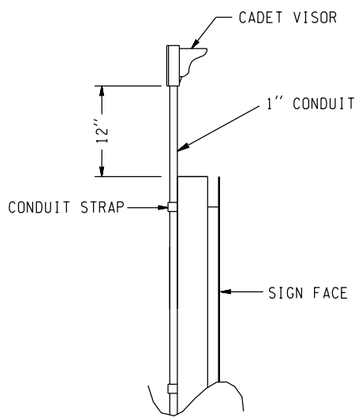

BEACON DETAIL

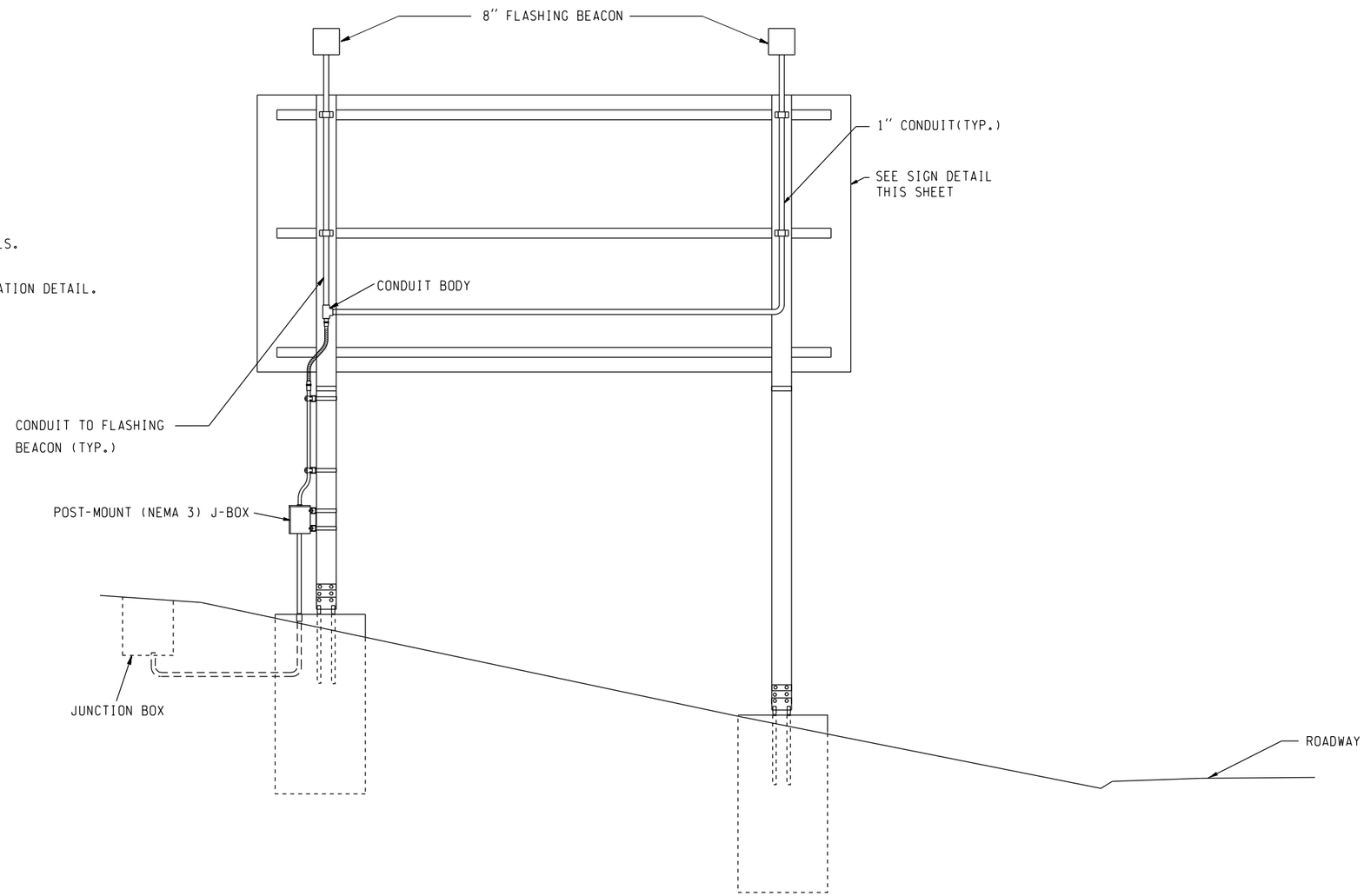

SHOULDER MOUNT HAR SIGN DETAILS

NOT TO SCALE

MASTER DETAIL REVISED 5/16/11

FILE NAME	C:\Users\tranp\AppData\Local\Microsoft\Windows\Temporary Internet Files\Content.Outlook\W6207OZJ\HAR.DGN								Plot 8
TIME	10:52:03 AM				REGION NO.	STATE	FED.AID PROJ.NO.		
DATE	2/5/2015				10	WASH		Washington State Department of Transportation	
PLOTTED BY	tranp				JOB NUMBER				SHEET
DESIGNED BY									OF
ENTERED BY									
CHECKED BY					CONTRACT NO.		LOCATION NO.		SHEETS
PROJ. ENGR.									
REGIONAL ADM.		REVISION	DATE	BY					

P.E. STAMP BOX DATE

P.E. STAMP BOX DATE

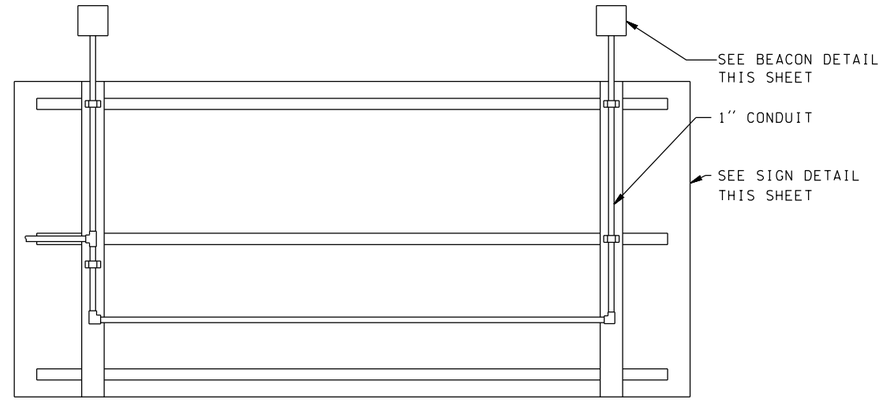

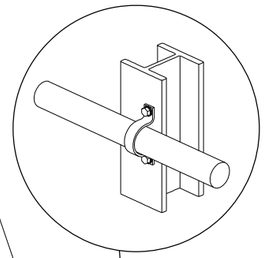

6" DIAM. HAND HOLE AND REINFORCEMENT RING INSTALL IN BEAM WITHIN 18" OF SIGN LIGHT AND / OR FLASHING BEACON NIPPLE. SEE SIGN BRIDGE SHEET

SIGN BRIDGE OR CANTILEVER MONOTUBE BEAM

Z CHANNEL

SIGN FACE

STAINLESS STEEL CONDUIT CLAMP ATTACH TO Z CHANNEL

MONOTUBE BEAM BRACKET (TYP.)

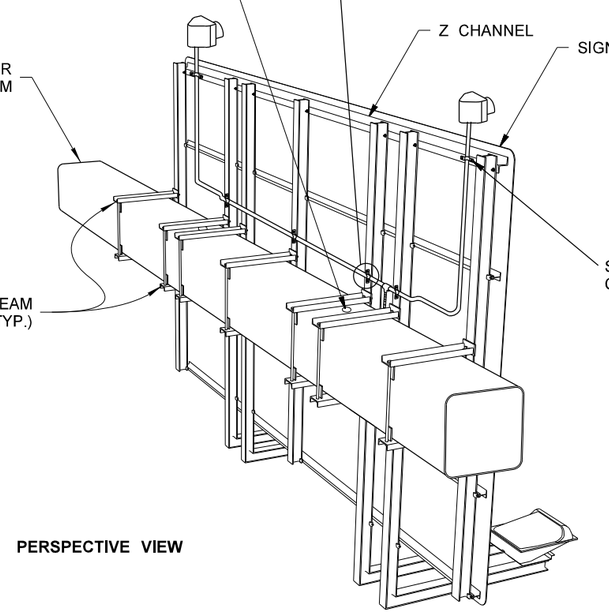

PERSPECTIVE VIEW

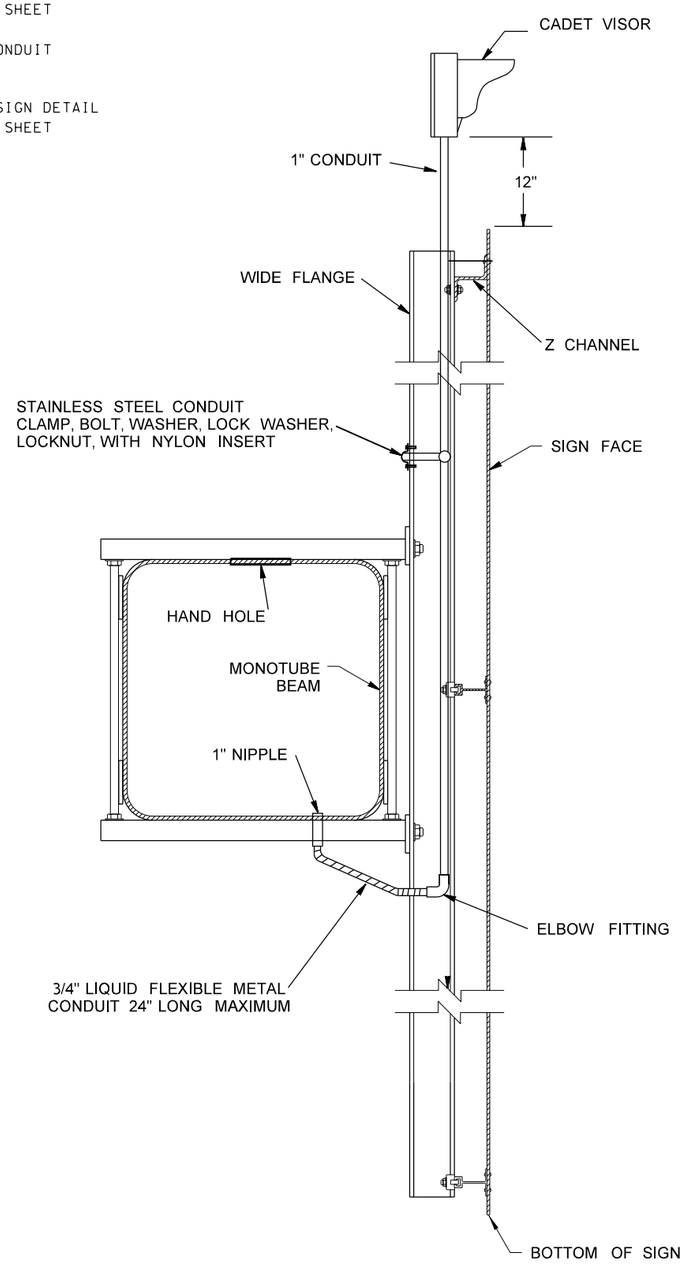

NOTE:

ALL MOUNTING HARDWARE SHALL BE STAINLESS STEEL.

HAR SIGN INSTALLATION DETAILS
(ON SIGN STRUCTURE)

MASTER DETAIL REVISED 5/16/11

FILE NAME	C:\Users\tranp\AppData\Local\Microsoft\Windows\Temporary Internet Files\Content.Outlook\W6207OZJ\HAR.DGN				REGION NO.	STATE	FED.AID PROJ.NO.			SIDE VIEW MONOTUBE CONNECTION	Plot 9
TIME	10:52:08 AM				10	WASH			Washington State Department of Transportation		
DATE	2/5/2015				JOB NUMBER						SHEET
PLOTTED BY	tranp										OF
DESIGNED BY											SHEETS
ENTERED BY											
CHECKED BY					CONTRACT NO.		LOCATION NO.				
PROJ. ENGR.											
REGIONAL ADM.		REVISION	DATE	BY				P.E. STAMP BOX DATE	P.E. STAMP BOX DATE		

NOTES:

1. THE ANTENNA SHALL BE CENTER OR BASE LOADED VERTICAL FEATURING A LOW-LOSS, EMBEDDED WEATHERPROOF LOADING COIL.

2. THE GROUNDPLANE SHALL BE 120' RADIAL AND BURIED 1' UNDERGROUND OR TRIAD GROUND SYSTEM PER MANUFACTURER'S RECOMMENDATIONS AND SPECIAL PROVISIONS.

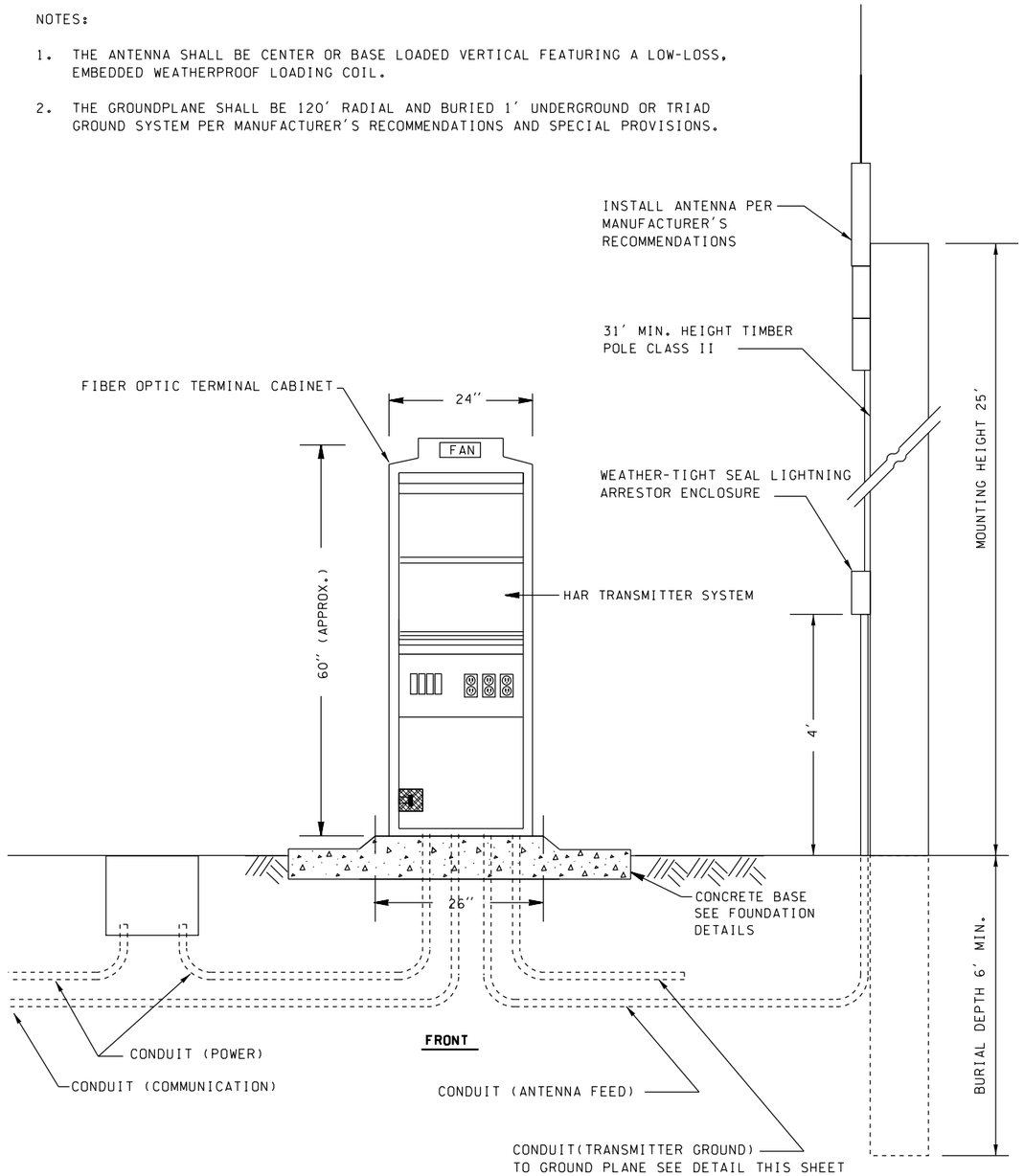

HIGHWAY ADVISORY RADIO TRANSMITTER

NOT TO SCALE

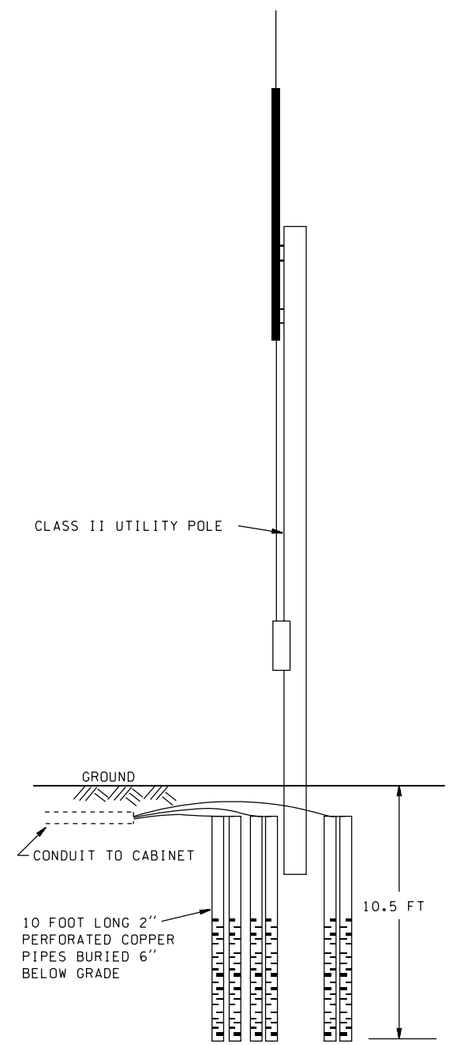

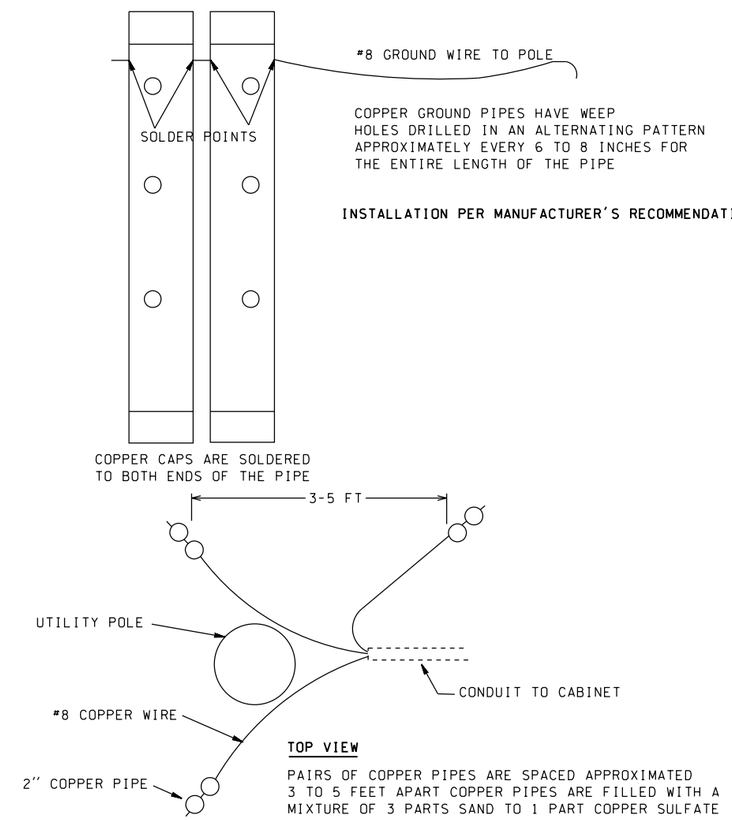

HIGHWAY ADVISORY RADIO TRANSMITTER
WITH TRIAD GROUND SYSTEM

FILE NAME	C:\Users\tranp\AppData\Local\Microsoft\Windows\Temporary Internet Files\Content.Outlook\W6207OZJ\HAR.DGN						Plot 10
TIME	10:52:14 AM				REGION NO. 10	STATE WASH	FED.AID PROJ.NO.
DATE	2/5/2015						
PLOTTED BY	tranp				JOB NUMBER		SHEET
DESIGNED BY							OF
ENTERED BY							SHEETS
CHECKED BY					CONTRACT NO.	LOCATION NO.	
PROJ. ENGR.							
REGIONAL ADM.		REVISION	DATE	BY			

P.E. STAMP BOX DATE

P.E. STAMP BOX DATE

Washington State Department of Transportation