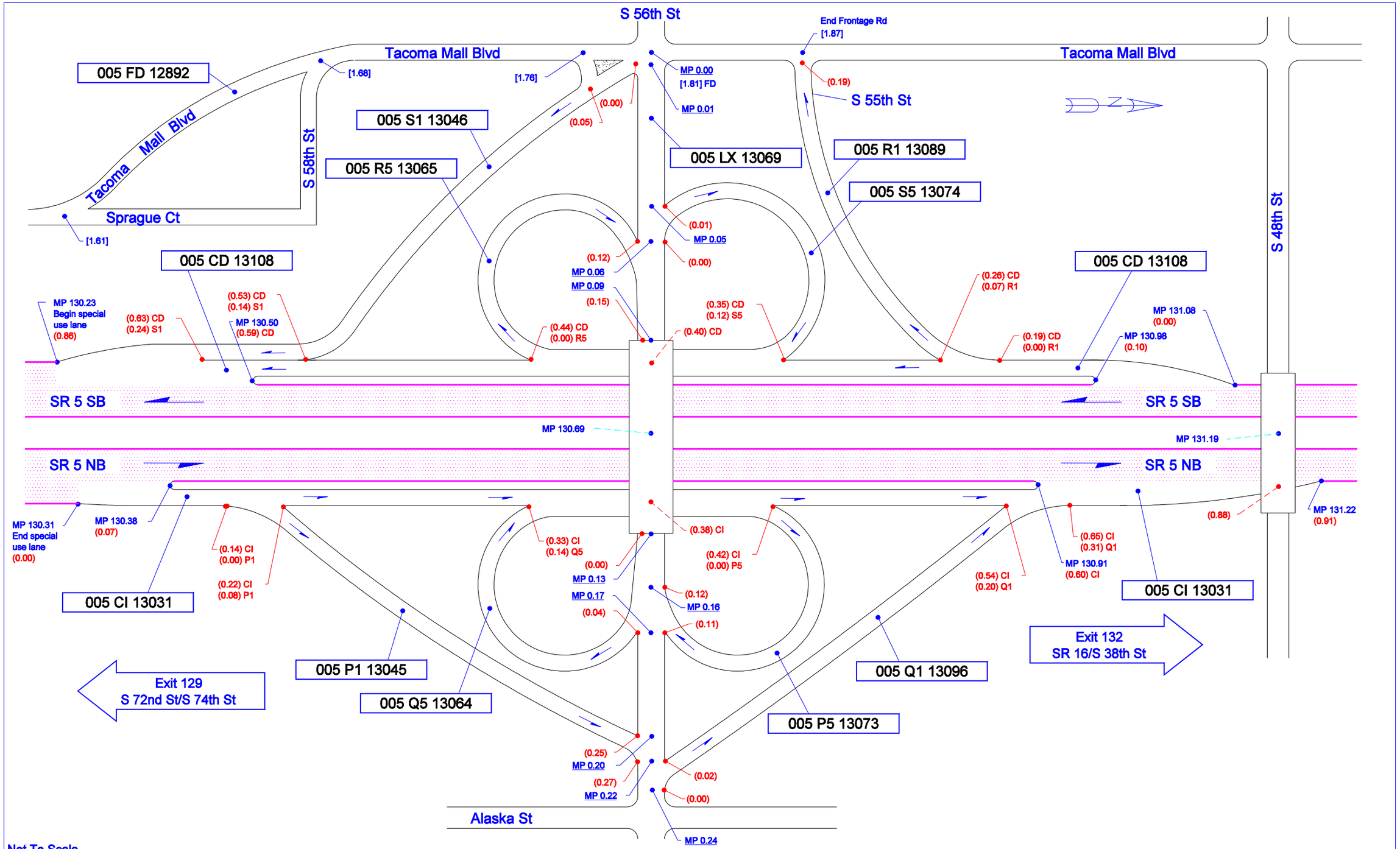

Not To Scale

11/21/2005	KLK	WSDOT OLYMPIC REGION	TACOMA, PIERCE COUNTY	JCT S. 56TH ST/TACOMA MALL BLVD	SR 5 - EXIT 130