Valley
POWER SYSTEMS, INC.

AUTHORIZED DISTRIBUTOR
ELECTRO MOTIVE

NEW 144-AUTO FERRIES PROJECT
4420 14TH AVENUE NW – SEATTLE, WA 98107 Tel. 206-834-2329 Fax. 206-782-5455

1-DOC-003 Rev. -
(Formerly Calculation P-0291-03)

Contract 00-6679

ENGINEERING CALCULATION

ENGINE VIBRATION ISOLATORS
MODEL RD-215

Performed by: VENDOR

Date: 14 October 2005

Reviewed by: [signature]

Date: 3/30/06

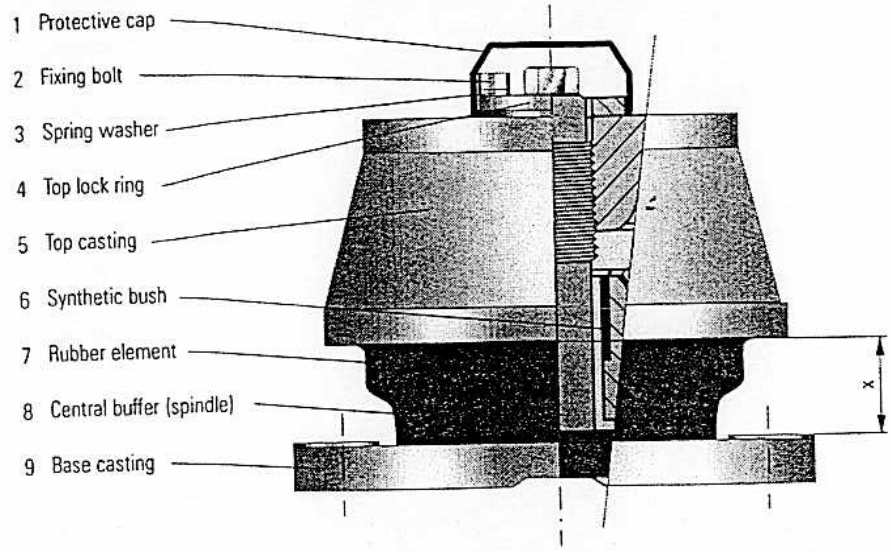

Type RD 214 / RD 215 / RD 244

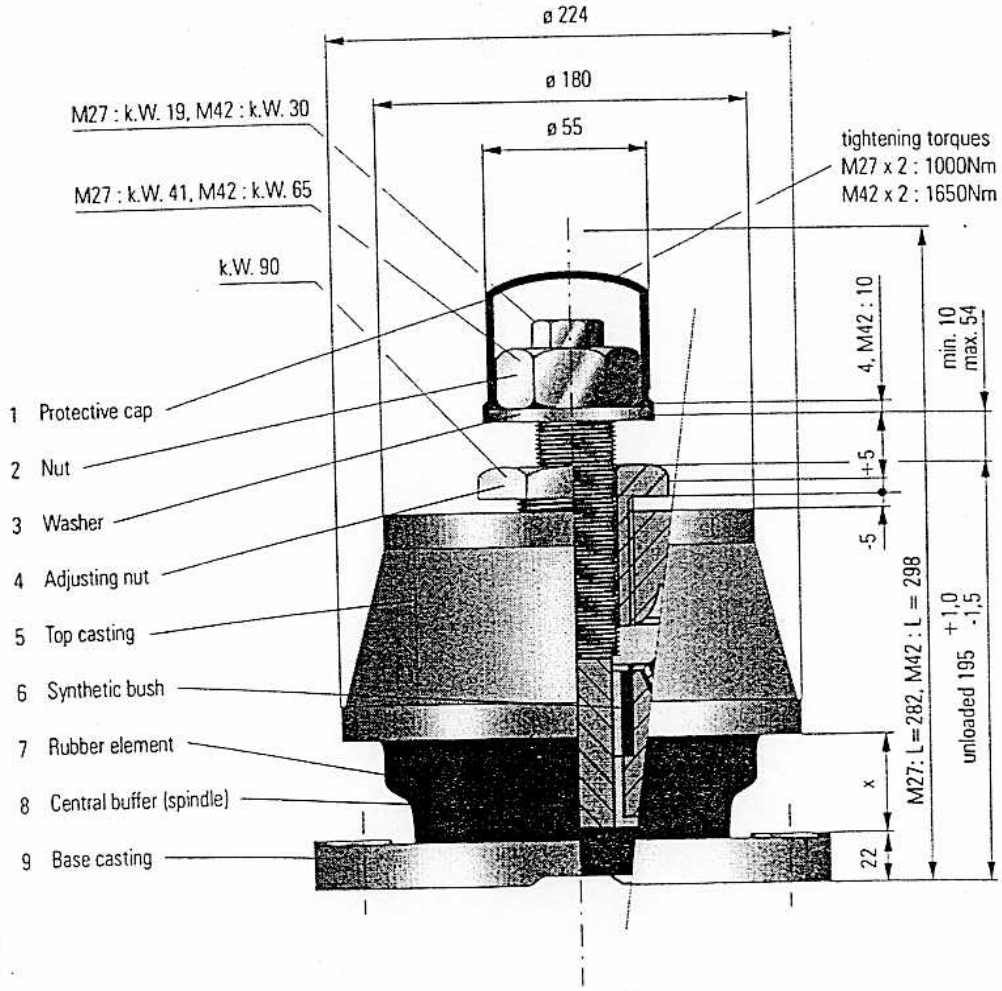

Type RD 214 / RD 215 / RD 244 with height re-adjustment

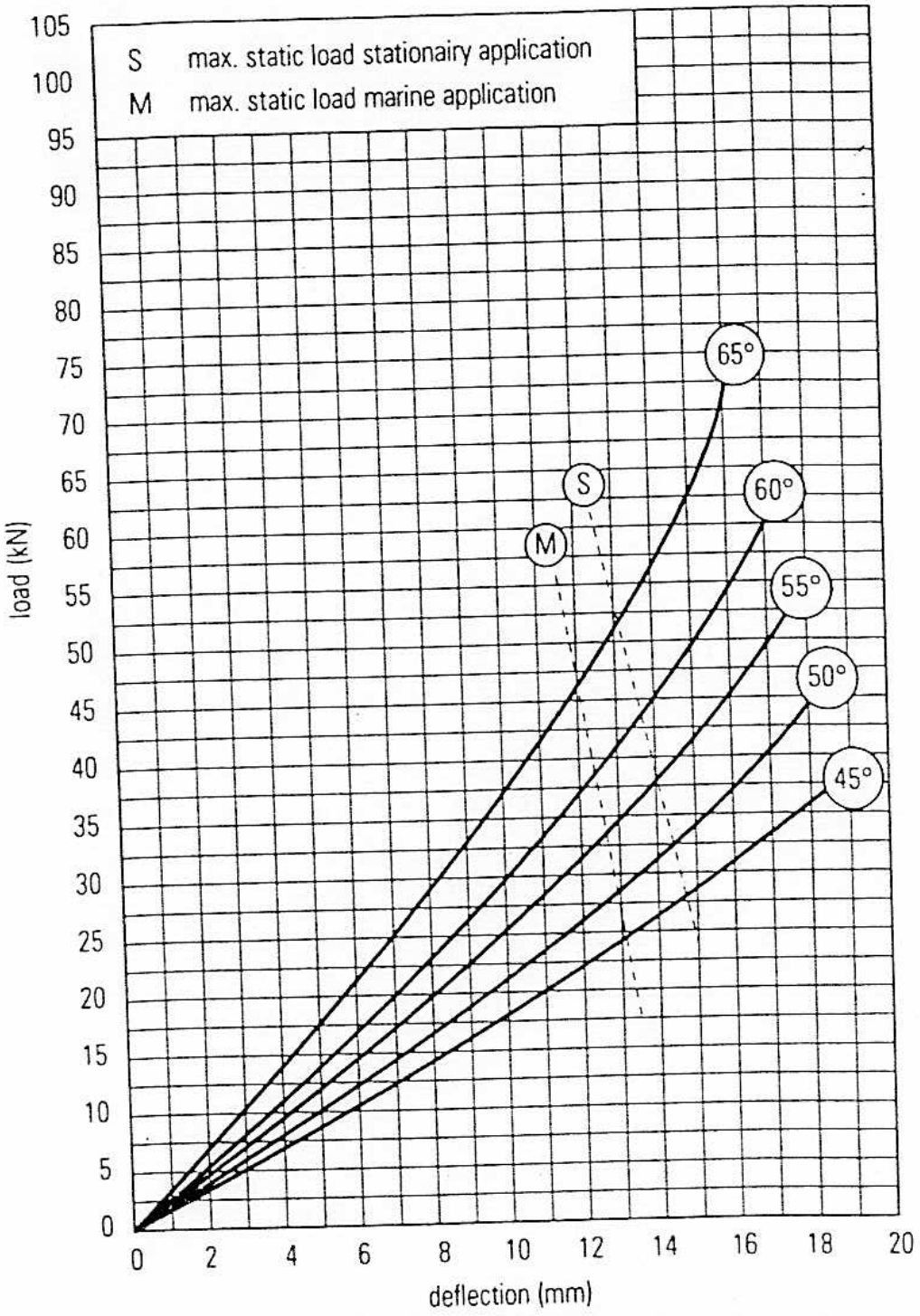

Vertical load / deflection characteristics Type RD 215

Soundown/1226/1

Rubber Design
vibration and noise control
Rubber Design B.V.
Industrieweg 21
P.O. Box 15
2995 ZG Heerjansdam
the Netherlands
t. +31 (0)786778778
f. +31 (0)786771038
e. info@rubberdesign.nl
w. www.rubberdesign.nl

General data client and project

Mainproject	:	Soundown
Description	:	Soundown Corporation
Project	:	1226
Description	:	WA State Ferries - 130 Auto Ferry

Customer	:	5588
Company	:	Soundown Corporation
Address	:	17 Lime Street Suite #1
Zipcode / Town	:	MA-01945 Marblehead
Country	:	United States of America

Application	:	Flex. suspension EMD 12-710G7C

Note :

Mountingtype	10x RD 215 : 4x 60° / 4x 55° / 2x 50° Shore A.
Performance	3000 HP at 900 RPM
Bellows	1x NW 500
Centre of gravity	According to specifications
X-coordinates	455 - 1573 - 2691 - 3809 - 4927 [front face of baseframe]

Soundown/1226/1

Rubber Design
vibration and noise control

Basic data of the resiliently mounted system

Mass	Weight :	21875,00 [Kg]
Mass moments of Inertia	Inertia X-X :	10975,93 [Kgm²]
	Inertia Y-Y :	38160,47 [Kgm²]
	Inertia Z-Z :	31238,77 [Kgm²]

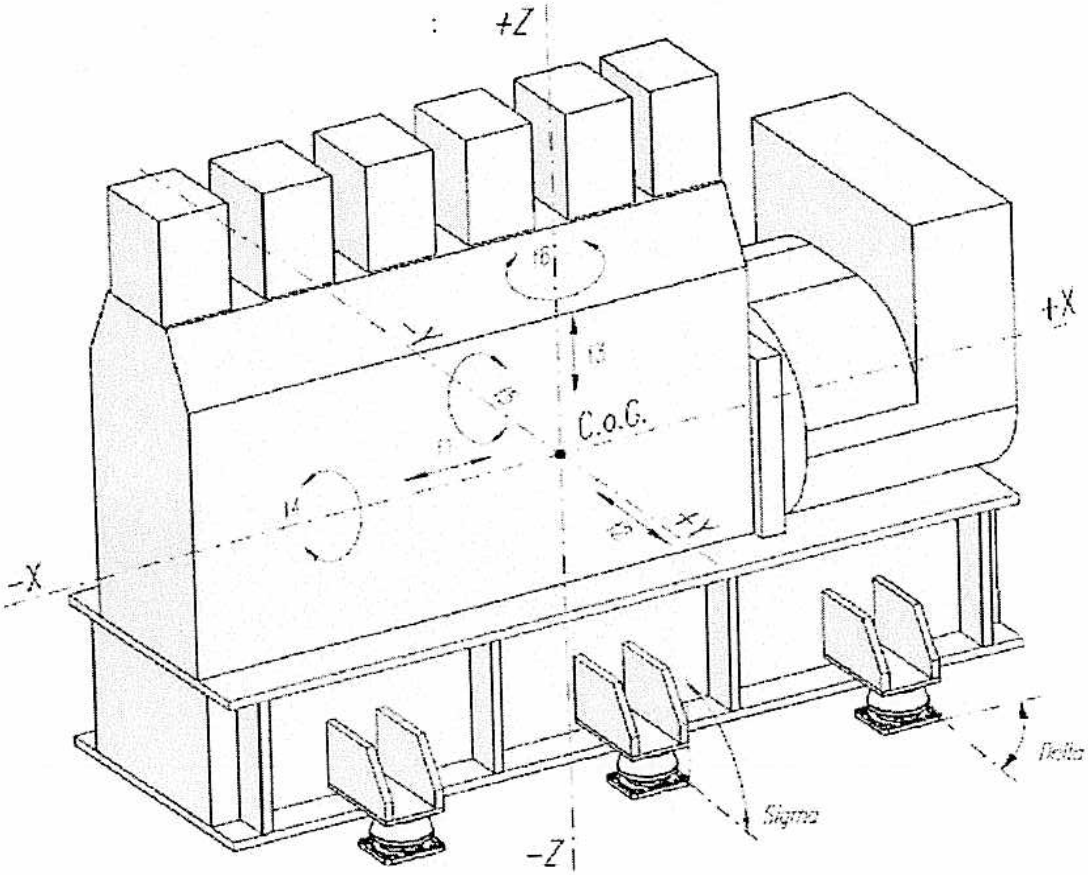

Legend

Axis

X = Longitudinal
Y = Lateral
Z = Vertical

Rotation

Delta = XY rotation
Sigma = YZ rotation

Frequency

f1 = Longitudinal
f2 = Lateral
f3 = Vertical
f4 = Rolling
f5 = Pitching
f6 = Yawing

Soundown/1226/1

Rubber Design
vibration and noise control

Mounting properties

Mounting type	°Shore.A	Cx [kN/m]	Cy [kN/m]	Cz [kN/m]	Dyn/Stat Ratio	Dyn. Magnifier
215-20-50	50	2300,00	2300,00	2100,00	1,25	20,00
215-20-55	55	3000,00	3000,00	2500,00	1,40	18,00
215-25-60	60	3750,00	3750,00	3200,00	1,50	16,00
NW500-TST	ST	250,00	250,00	100,00	1,00	50,00

Mounting parameters

		Positions of mountings [mm]			Rotations [°]		Calculated static stiffnesses [kN/m]					
No	Mounting type	Ax	Ay	Az	Sigma	Delta	Kxx	Kyy	Kzz	Kxy	Kyz	Kxz
1	215-25-60	-2063,00	863,50	-1298,00	0,00	0,00	3750,00	3750,00	3200,00	0,00	0,00	0,00
2	215-25-60	-2063,00	-863,50	-1298,00	0,00	0,00	3750,00	3750,00	3200,00	0,00	0,00	0,00
3	215-25-60	-945,00	863,50	-1298,00	0,00	0,00	3750,00	3750,00	3200,00	0,00	0,00	0,00
4	215-25-60	-945,00	-863,50	-1298,00	0,00	0,00	3750,00	3750,00	3200,00	0,00	0,00	0,00
5	215-20-55	173,00	863,50	-1298,00	0,00	0,00	3000,00	3000,00	2500,00	0,00	0,00	0,00
6	215-20-55	173,00	-863,50	-1298,00	0,00	0,00	3000,00	3000,00	2500,00	0,00	0,00	0,00
7	215-20-55	1291,00	863,50	-1298,00	0,00	0,00	3000,00	3000,00	2500,00	0,00	0,00	0,00
8	215-20-55	1291,00	-863,50	-1298,00	0,00	0,00	3000,00	3000,00	2500,00	0,00	0,00	0,00
9	215-20-50	2409,00	863,50	-1298,00	0,00	0,00	2300,00	2300,00	2100,00	0,00	0,00	0,00
10	215-20-50	2409,00	-863,50	-1298,00	0,00	0,00	2300,00	2300,00	2100,00	0,00	0,00	0,00
11	NW500-TST	-2491,00	0,00	1656,00	0,00	0,00	250,00	250,00	100,00	0,00	0,00	0,00

Soundown/1226/1

Rubber Design
vibration and noise control

Calculated natural frequencies

	f1 Longitudinal	f2 Lateral	f3 Vertical	f4 Rolling	f5 Pitching	f6 Yawing
[Hz]	4,79	3,63	6,69	16,83	11,90	10,63
[1/min]	287,47	217,63	401,37	1009,99	713,86	637,61

Eigenvectors of the system

	x [mm]	y [mm]	z [mm]	roll [rads]	pitch [rads]	yaw [rads]
Mode No 1	1,000E+00	0,000E+00	-1,460E-01	0,000E+00	4,388E-04	0,000E+00
Mode No 2	0,000E+00	1,000E+00	0,000E+00	-5,810E-04	0,000E+00	2,501E-05
Mode No 3	1,342E-01	0,000E+00	1,000E+00	0,000E+00	1,538E-05	0,000E+00
Mode No 4	0,000E+00	2,934E-01	0,000E+00	1,000E-03	0,000E+00	-5,454E-05
Mode No 5	-7,546E-01	0,000E+00	7,444E-02	0,000E+00	1,000E-03	0,000E+00
Mode No 6	0,000E+00	8,140E-03	0,000E+00	1,505E-04	0,000E+00	1,000E-03

Soundown/1226/2

Rubber Design
vibration and noise control

Calculated deflection: Mountings Only

Moments & Forces	x [N]	y [N]	z [N]	a [Nm]	b [Nm]	c [Nm]
	0,000E+00	0,000E+00	-2,146E+05	0,000E+00	0,000E+00	0,000E+00

Coördinates	x [mm]	y [mm]	z [mm]
	0,000E+00	0,000E+00	0,000E+00

Calculated static deflections [mm]

Mounting number	1	2	3	5	7	8	9	10
Forced defl. x	0,000	0,000	0,000	0,000	0,000	0,000	0,000	0,000
Forced defl. y	0,000	0,000	0,000	0,000	0,000	0,000	0,000	0,000
Forced defl. z	-8,271	-8,271	-8,286	-8,301	-8,315	-8,315	-8,330	-8,330

Soundown/1226/3

Rubber Design
vibration and noise control

Displacements caused by ship movements : Roll

	Displacements [mm]							
Degrees	5°	10°	15°	20°	25°	30°	35°	40°
At mounting number								
1: x	-0,034	-0,066	-0,098	-0,129	-0,160	-0,189	-0,217	-0,243
1: y	0,487	0,971	1,447	1,913	2,363	2,796	3,207	3,594
1: z	-0,896	-1,732	-2,496	-3,185	-3,793	-4,315	-4,748	-5,088
At mounting number								
2: x	0,032	0,066	0,098	0,130	0,161	0,190	0,219	0,245
2: y	0,487	0,971	1,447	1,913	2,363	2,796	3,207	3,594
2: z	0,956	1,958	3,004	4,083	5,188	6,310	7,440	8,571
At mounting number								
3: x	-0,034	-0,066	-0,098	-0,129	-0,160	-0,189	-0,217	-0,243
3: y	0,530	1,056	1,574	2,081	2,571	3,041	3,489	3,910
3: z	-0,896	-1,728	-2,487	-3,169	-3,768	-4,279	-4,700	-5,025
At mounting number								
5: x	-0,034	-0,066	-0,098	-0,129	-0,160	-0,189	-0,217	-0,243
5: y	0,573	1,142	1,701	2,248	2,778	3,287	3,771	4,226
5: z	-0,896	-1,724	-2,478	-3,153	-3,743	-4,244	-4,651	-4,963
At mounting number								
7: x	-0,034	-0,066	-0,098	-0,129	-0,160	-0,189	-0,217	-0,243
7: y	0,616	1,227	1,829	2,416	2,986	3,533	4,052	4,541
7: z	-0,896	-1,720	-2,469	-3,137	-3,718	-4,208	-4,603	-4,901
At mounting number								
9: x	-0,034	-0,066	-0,098	-0,129	-0,160	-0,189	-0,217	-0,243
9: y	0,659	1,312	1,956	2,584	3,193	3,778	4,334	4,857
9: z	-0,896	-1,716	-2,460	-3,121	-3,693	-4,172	-4,555	-4,838
At mounting number								
10: x	0,032	0,066	0,098	0,130	0,161	0,190	0,219	0,245
10: y	0,659	1,312	1,956	2,584	3,193	3,778	4,334	4,857
10: z	0,956	1,974	3,040	4,147	5,288	6,453	7,633	8,821
At mounting number								
11: x	-0,001	-0,011	-0,024	-0,042	-0,066	-0,094	-0,126	-0,164
11: y	3,639	7,250	10,806	14,280	17,645	20,875	23,947	26,837
11: z	0,030	0,112	0,250	0,443	0,688	0,984	1,328	1,718

Soundown/1226/3

Rubber Design
vibration and noise control

Displacements caused by ship movements : Pitch

	Displacements [mm]							
Degrees	5°	6°	7°	8°	9°	10°	11°	12°
At mounting number								
1: x	0,579	0,695	0,810	0,925	1,040	1,154	1,268	1,382
1: y	0,000	0,000	0,000	0,000	0,000	0,000	0,000	0,000
1: z	0,721	0,871	1,023	1,178	1,334	1,492	1,652	1,814
At mounting number								
2: x	0,579	0,695	0,810	0,925	1,040	1,154	1,268	1,382
2: y	0,000	0,000	0,000	0,000	0,000	0,000	0,000	0,000
2: z	0,721	0,871	1,023	1,178	1,334	1,492	1,652	1,814
At mounting number								
3: x	0,579	0,695	0,810	0,925	1,040	1,154	1,268	1,382
3: y	0,000	0,000	0,000	0,000	0,000	0,000	0,000	0,000
3: z	0,332	0,405	0,481	0,558	0,638	0,720	0,804	0,891
At mounting number								
5: x	0,579	0,695	0,810	0,925	1,040	1,154	1,268	1,382
5: y	0,000	0,000	0,000	0,000	0,000	0,000	0,000	0,000
5: z	-0,056	-0,060	-0,062	-0,061	-0,058	-0,052	-0,043	-0,033
At mounting number								
7: x	0,579	0,695	0,810	0,925	1,040	1,154	1,268	1,382
7: y	0,000	0,000	0,000	0,000	0,000	0,000	0,000	0,000
7: z	-0,445	-0,526	-0,605	-0,680	-0,753	-0,824	-0,891	-0,956
At mounting number								
9: x	0,579	0,695	0,810	0,925	1,040	1,154	1,268	1,382
9: y	0,000	0,000	0,000	0,000	0,000	0,000	0,000	0,000
9: z	-0,833	-0,992	-1,147	-1,300	-1,449	-1,596	-1,739	-1,879
At mounting number								
10: x	0,579	0,695	0,810	0,925	1,040	1,154	1,268	1,382
10: y	0,000	0,000	0,000	0,000	0,000	0,000	0,000	0,000
10: z	-0,833	-0,992	-1,147	-1,300	-1,449	-1,596	-1,739	-1,879
At mounting number								
11: x	1,606	1,925	2,244	2,561	2,878	3,194	3,508	3,821
11: y	0,000	0,000	0,000	0,000	0,000	0,000	0,000	0,000
11: z	0,869	1,049	1,231	1,415	1,600	1,788	1,977	2,167

Soundown/1226/1

Rubber Design
vibration and noise control

Calculations of the (combined) mass moments of inertia

Combinning masses

Posnr.	Description	Masses [kg]	Coordinates of ind. C. of G. X [mm]	Y [mm]	Z [mm]	Block dimensions Mx [mm]	My [mm]	Mz [mm]
1	Engine	15876,00	3378,00	0,00	1339,00	3360	960	2080
2	Accessory rack	1815,00	1325,00	0,00	1570,00	1850	1200	1800
3	Skid frame	2450,00	2832,00	0,00	270,00	5664	1700	540
4	Miscellaneous	1734,00	3378,00	0,00	1339,00	0	0	0
	Total mass :	21875,00						

Individual mass moments of inertia

Posnr.	Description	Ixx [kgm²]	Iyy [kgm²]	Izz [kgm²]	Ixy [kgm²]	Ixz [kgm²]	Iyz [kgm²]
1	Engine	6943,10	20659,97	16155,42	0,00	0,00	0,00
2	Accessory rack	707,85	1007,70	735,45	0,00	0,00	0,00
3	Skid frame	649,58	6609,38	7139,89	0,00	0,00	0,00
4	Miscellaneous	0,00	0,00	0,00	0,00	0,00	0,00

Coordinates total center of gravity relative to data origin

X	:	3146,51 [mm]
Y	:	0,00 [mm]
Z	:	1238,44 [mm]

Total moment of inertia about s pecified axes directions but through total center of gravity

Ixx	:	10975,93 [kgm²]
Iyy	:	38160,47 [kgm²]
Izz	:	31238,77 [kgm²]

Total products of i nertia

Ixy	:	0,00 [kgm²]
Ixz	:	60,02 [kgm²]
Iyz	:	0,00 [kgm²]

REV	ZONE	DESCRIPTION	DATE

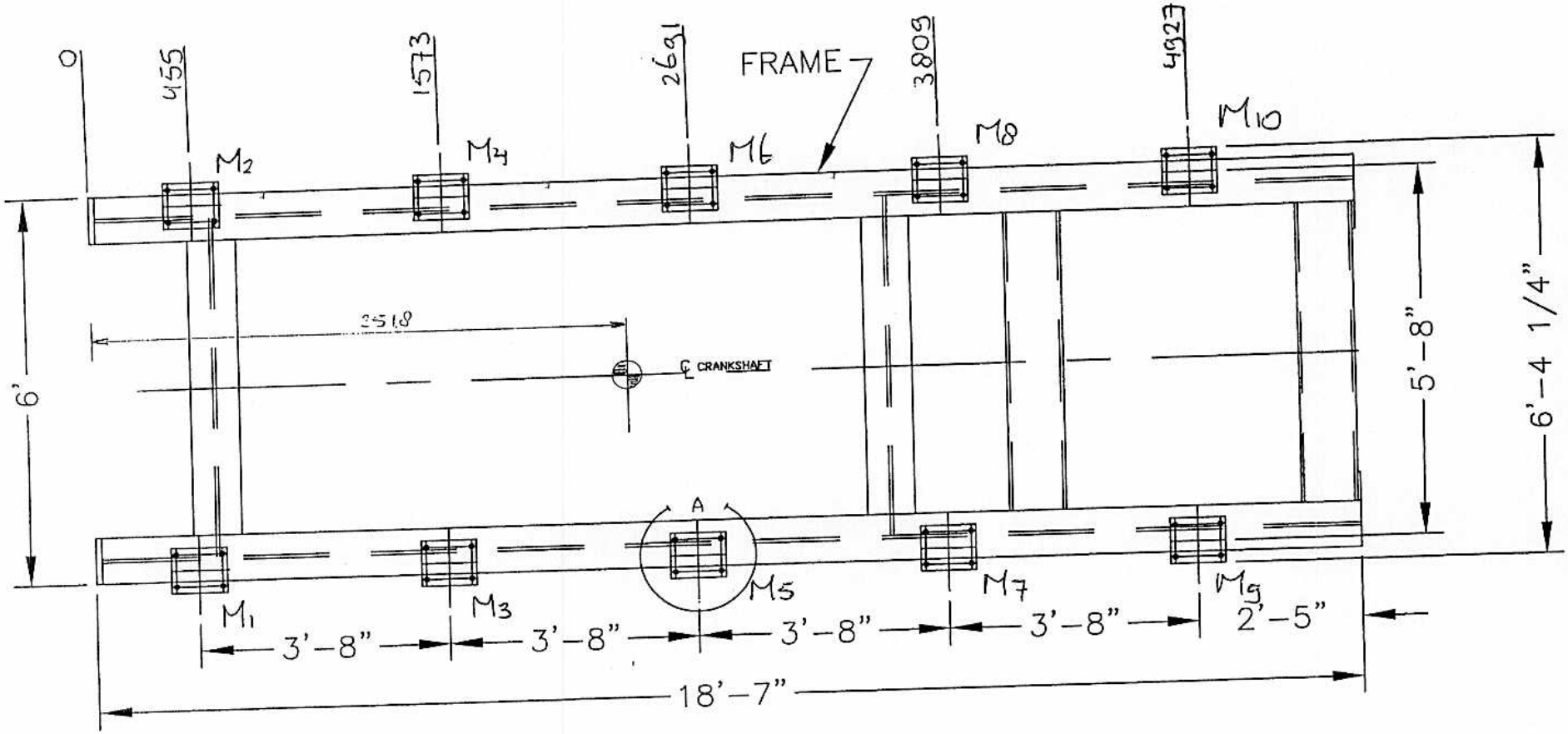

ANCHOR BOLTS LAYOUT

669