Purpose of drawing
Show interconnection between EGCP-3 and PPPC supplied components. Other connections related to the switchgear to be completed by the designer of the switchgear that is part of the shipyard contract.

Reference Documents

Pacific Power Products Ship Service Generator LOP Schematics, 8-6176205-E1
Pacific Power Products Emergency Generator LOP Schematics, 806176206-E1
Woodward EGCP-3 Installation Manual, 26122E
Woodward EGCP-3 Operation Manual, 26194B

EGCP-3 Interface Notes

1. 24V DC Power Supply
Recommended 24V DC power for the EGCP-3 to be derived from the LOP. LOP circuit is protected by a 5A breaker. Provide overcurrent protection to the EGCP-3 as recommended by Woodward.
LOP Terminal 242: Positive
LOP Terminal 953: Negative

2. Start/Stop Control (DDEC Ignition)
The EGCP-3 provides Start/Stop control via Fixed Output No. 5 to LOP terminal 228. (B- switched signal)

3. Starter Motor Control
The EGCP-3 provides Starter Motor control via Fixed Output No. 7 to LOP terminal 229. (B- switched signal)

4. Magnetic Pickup Input
The engine flywheel has 118 teeth and operates at a rated speed of 1800 RPM. Ground cable shield at EGCP-3 end.
DC Junction Box terminals 219, 220, and SH3 (shield)

5. Speed Control Output
The DDEC control system requires a 0.5 to 4.5 volt speed bias input. Ground cable shield at EGCP-3 end.
LOP Terminal 916B = Sensor +5V Reference
LOP Terminal 510B = VSG Signal
LOP Terminal 952B = Sensor Return
LOP Terminal SH5 = Shield

6. Overspeed Shutdown
The EGCP-3 does not offer a digital output that can be programmed exclusively as annunciation for an Overspeed Shutdown. As such, the following configuration is suggested to produce an Overspeed Annunciation output from the EGCP-3.

Use a Configurable Output programmed as Menu Item 5, "Airbox Shutoff Solenoid" for overspeed annunciation to LOP terminal 232. (B- switched signal) Jumper (hardwire to common bus) Digital Input No. 1 that is normally used for Emergency Stop and re-assign the Emergency Stop function to another available Digital Input programmed as a hard shutdown. In this way, when an overspeed condition occurs, the Airbox Shutoff function will activate and provide annunciation for overspeed only but not for Emergency Stop because Emergency Stop had been re-assigned to a Digital Input other than No. 1. Latching for Overspeed annunciation is provided in the LOP. Any required feedback prevention (diode) on this output is the responsibility of the switchgear designer.

7. Idle/Rated Control

Option 1 - Manual Operator Control of Idle/Rated Speed
The LOP requires a B- signal output to terminal 230 to operate the Idle/Rated function. Off = Idle Speed, Energized = Rated Speed. A switch or relay contact can be connected to these terminals to allow the operator to manually select the operational speed of the generator-set at any time. If the Idle/Rated function is wired to operate independently of the EGCP-3, then certain alarms in the EGCP-3 may be required to be disabled. Disabling alarms may be required in cases where the generator-set is operating at idle speed but the EGCP-3 believes the generator-set should be operating at rated speed.

Option 2 - EGCP-3 Control of Idle/Rated Speed
The LOP requires a B- signal output to terminal 230 to operate the Idle/Rated function. Off = Idle Speed, Energized = Rated Speed. The EGCP-3 can be configured to operate the Idle/Rated function as follows:

Select a Configurable Output programmed as "Idle Rated Command" Menu Item 4, for connection to LOP terminal 230. Select a Digital Input programmed as "Skip Idle Timer" Menu Item 26 and connect an Idle/Rated switch to this input. Program the EGCP-3 idle timer to maximum (approximately 20 minutes). When the generator-set starts it will operate at idle speed. Providing a signal to the "Skip Idle Timer" input will activate the "Idle Rated Command" digital output to command the generator-set to operate at rated speed. When the EGCP-3 is operating in the cooldown mode (assuming cooldown mode is enabled) the generator-set will operate at idle speed. If this Option is used, however, the EGCP-3 is in control of the engine speed once the "Skip Idle Timer" input is activated and cannot be overridden manually by the operator.

8. Low Oil Pressure Shutdown
The generator-set electronic controls provide an internal shutdown for Low Oil Pressure. Annunciation contacts for this shutdown are connected on LOP terminals 723, 724 and 725. It is recommended that these contacts be connected to an EGCP-3 Digital Input so the EGCP-3 can monitor this shutdown and provide an orderly shutdown of the generator-set and related systems.

9. Voltage Control Output
The DECS-100 voltage regulator requires a 0 to 3 volt speed bias input. Ground cable shield at EGCP-3 end.
DECS-100 Terminal A: Positive to Raise, Negative to Lower
DECS-100 Terminal B: Negative to Raise, Positive to Lower

REV	DATE	CHECKED
C	5/18/06	RAB
B	5/2/06	RAB
A	4/6/06	RAB

Pacific Power Products
7215 SOUTH 228TH STREET, KENT, WA 98037
PH. (253) 854-0505 • FAX (253) 850-2631

PROPRIETARY NOTICE:
THIS DRAWING AND THE INFORMATION IT CONTAINS IS THE PROPERTY OF PDDA AND IS CONSIDERED CONFIDENTIAL AND MAY NOT BE REPRODUCED, COPIED, OR USED IN PART OR WHOLE WITHOUT THE WRITTEN CONSENT OF PDDA.

DRAWING: MISC. ELECTRICAL SYSTEM DIAGRAM EGCP-3 CONNECTION
PROJECT: WASHINGTON STATE FERRIES 144 CAR FERRY
ALL DIMENSIONS ARE IN INCHES UNLESS OTHERWISE SPECIFIED

		DATE
DESIGNED	RAB	10-13-05
CHECKED	KJC	10-13-05
DRAFTED	DMD	10-13-05

SHEET 1 OF 2 | SCALE: NONE
DRAWING NO. 8-6176205-E2
REV. C

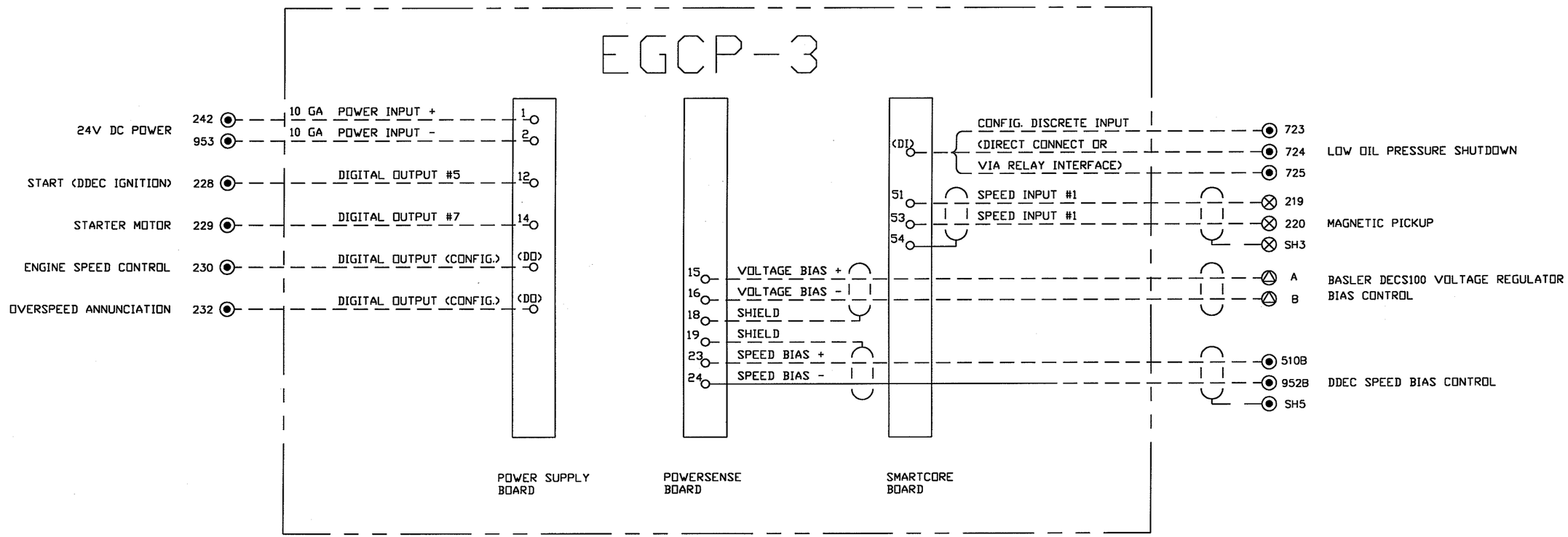

NOTES

DRAWING INCLUDES INPUT/OUTPUT FOR ENGINE LOP INTERFACE ONLY. INTERFACE FOR AC FUNCTIONS TO BE COMPLETED BY SWITCHGEAR SUPPLIER.

REV	DATE	CHECKED
C	5/18/06	RAB
B	5/2/06	RAB
A	4/6/06	RAB

Pacific Power Products
7215 SOUTH 228TH STREET, KENT, WA 98037
PH. (253) 854-0505 • FAX (253) 850-2631

PROPRIETARY NOTICE:
THIS DRAWING AND THE INFORMATION IT CONTAINS IS THE PROPERTY OF PODA AND IS CONSIDERED CONFIDENTIAL AND MAY NOT BE REPRODUCED, COPIED, OR USED IN PART OR WHOLE WITHOUT THE WRITTEN CONSENT OF PODA.

DRAWING: MISC. ELECTRICAL SYSTEM DIAGRAM EGCP-3 CONNECTION

PROJECT: WASHINGTON STATE FERRIES 144 CAR FERRY

ALL DIMENSIONS ARE IN INCHES UNLESS OTHERWISE SPECIFIED

		DATE
DESIGNED	RAB	10-13-05
CHECKED	KJC	10-13-05
DRAFTED	DMD	10-13-05

SHEET 2 OF 2 | SCALE: NONE

DRAWING NO. 8-6176205-E2 | REV. C