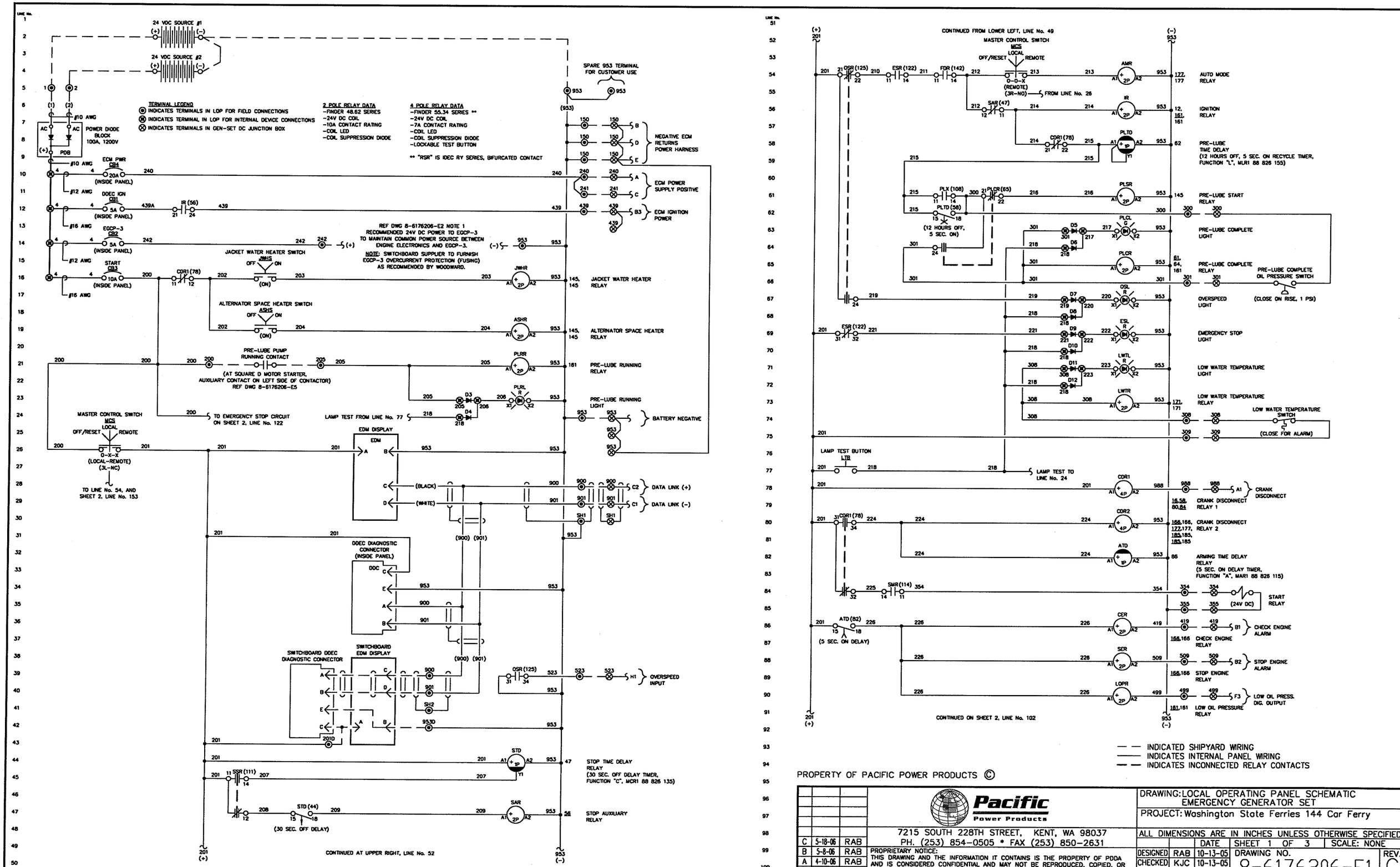

PROPERTY OF PACIFIC POWER PRODUCTS ©

REV	DATE	CHECKED	
C	5-18-06	RAB	
B	5-8-06	RAB	
A	4-10-06	RAB	

Pacific Power Products
7215 SOUTH 228TH STREET, KENT, WA 98037
PH. (253) 854-0505 * FAX (253) 850-2631

PROPRIETARY NOTICE:
THIS DRAWING AND THE INFORMATION IT CONTAINS IS THE PROPERTY OF PDDA AND IS CONSIDERED CONFIDENTIAL AND MAY NOT BE REPRODUCED, COPIED, OR USED IN PART OR WHOLE WITHOUT THE WRITTEN CONSENT OF PDDA.

DRAWING: LOCAL OPERATING PANEL SCHEMATIC EMERGENCY GENERATOR SET

PROJECT: Washington State Ferries 144 Car Ferry

ALL DIMENSIONS ARE IN INCHES UNLESS OTHERWISE SPECIFIED

		DATE	SHEET 1 OF 3	SCALE: NONE
DESIGNED	RAB	10-13-05	DRAWING NO.	REV.
CHECKED	KJC	10-13-05	8-6176206-E1	C
DRAFTED	DMD	10-13-05		

MASTER CONTROL SWITCH (MCS) CONTACT TARGET

DECK	CONTACT	MOUNTING POSITION	OPERATOR POSITION: OFF/RESET	LOCAL	REMOTE
1	NO	LEFT	X	O	O
	NO-EM	RIGHT	O	O	— X
2	NC-LB	LEFT	O	— X —	— X
	NC-LB	RIGHT	X —	— X —	O
3	NC	LEFT	O	X —	— X
	NO	RIGHT	O	O	X

MASTER CONTROL
OFF/RESET LOCAL REMOTE

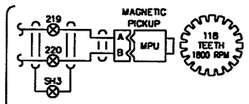

TO WOODWARD EGCP-3 CONTROL AT SWITCHBOARD REF DWG 8-6176206-E2

24V DC UNSWITCHED POWER FROM SHEET 1, LINE No. 24

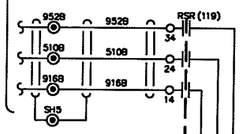

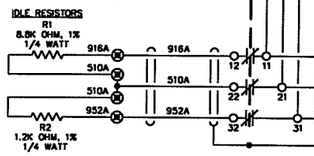

24 VDC CONTINUED FROM SHEET 1, LINE No. 93

(+) 201 — (-) 953

PRE-LUBE BUTTON
PLB
201 — 227

DOOR TO ENCLOSURE GROUND (#14 AWG, GREEN)

SWITCHBOARD CONTROL OUTPUTS

(A) OUTPUT TO PERFORM INDICATED FUNCTION FOR BOTH LOCAL AND REMOTE LOP OPERATION MODES

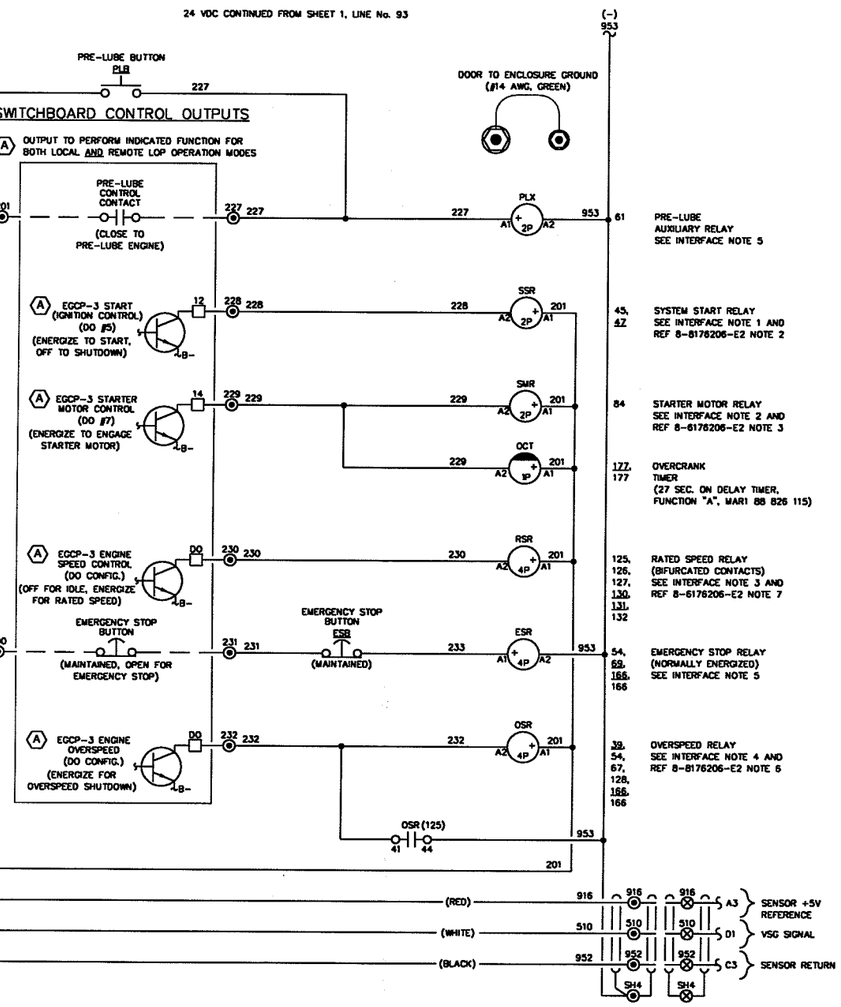

SPARE LOP TERMINALS

SPARE DC JUNCTION BOX TERMINALS

RADIATOR WATER LEVEL SWITCHES

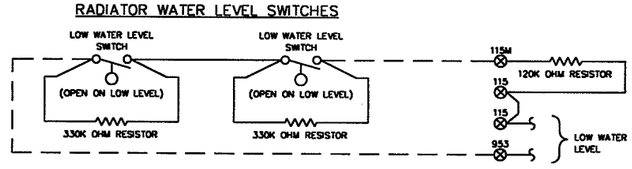

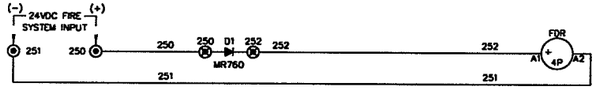

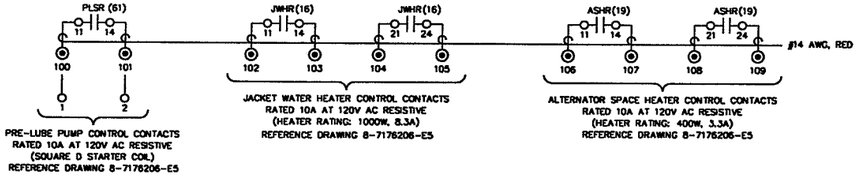

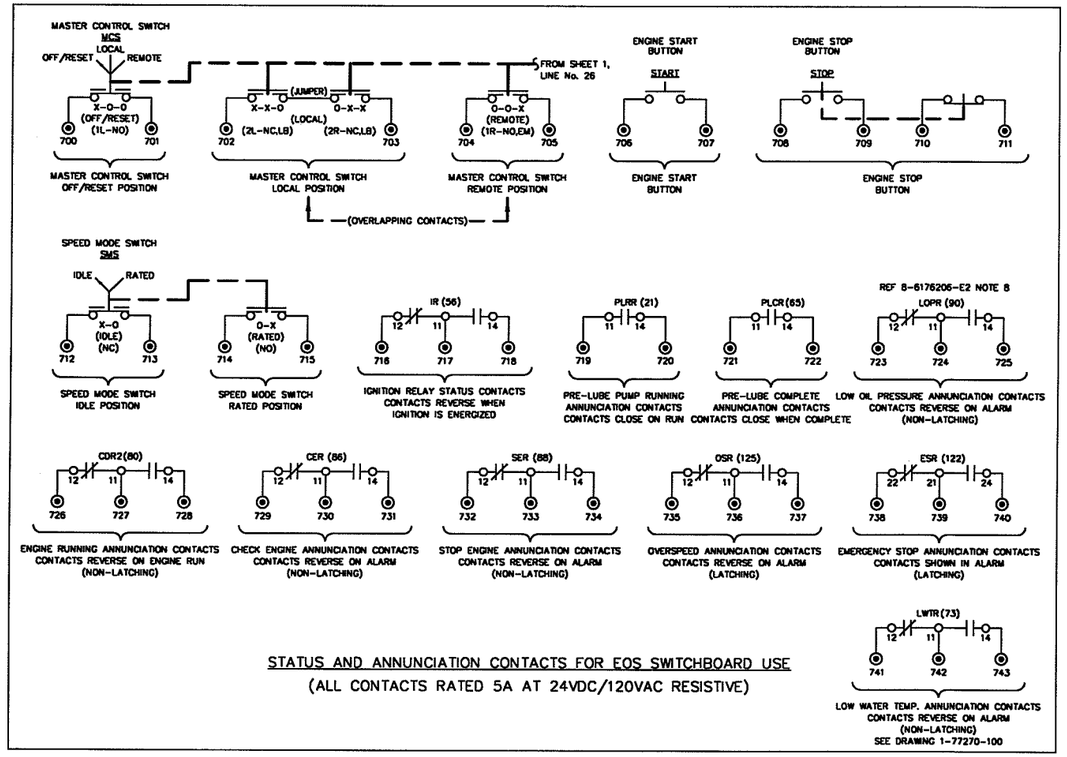

STATUS AND ANNUNCIATION CONTACTS FOR EOS SWITCHBOARD USE
(ALL CONTACTS RATED 5A AT 24VDC/120VAC RESISTIVE)

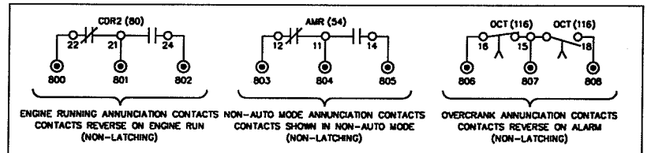

STATUS AND ANNUNCIATION CONTACTS FOR AMS USE
(ALL CONTACTS RATED 5A AT 24VDC/120VAC RESISTIVE)

FUSES OR CIRCUIT BREAKERS TO BE LOCATED AS CLOSE TO BATTERY AS PRACTICAL

ECM CURRENT DRAW
IGNITION OFF: 25 mA, IGNITION ON, ENGINE STOPPED 400 mA
ADD UP TO 1.5 mA FOR EACH DIGITAL OUTPUT
ENGINE RUNNING AT IDLE 0.8mA, ENGINE RUNNING RATED RPM AND FULL LOAD: 3.0A

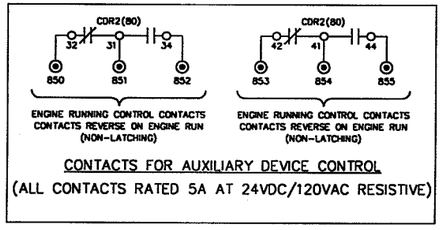

CONTACTS FOR AUXILIARY DEVICE CONTROL
(ALL CONTACTS RATED 5A AT 24VDC/120VAC RESISTIVE)

POWER HARNESS – SINGLE FUSE		
LENGTH FROM ECM TO BATTERY OR BUS BAR (FT)	MIN WIRE SIZE U.S (GA)	TOTAL RESISTANCE OF MAXIMUM LENGTH M-OHMS
0–14	12	24.8
14–22	10	24.57
22–35	8	24.58
25–55	6	24.7
55–89	4	25

PROPERTY OF PACIFIC POWER PRODUCTS ©

REV	DATE	CHECKED
C	5-18-06	RAB
B	5-8-06	RAB
A	4-10-06	RAB

Pacific Power Products
7215 SOUTH 228TH STREET, KENT, WA 98037
PH. (253) 854-0505 * FAX (253) 850-2631

PROPRIETARY NOTICE:
THIS DRAWING AND THE INFORMATION IT CONTAINS IS THE PROPERTY OF PDDA AND IS CONSIDERED CONFIDENTIAL AND MAY NOT BE REPRODUCED, COPIED, OR USED IN PART OR WHOLE WITHOUT THE WRITTEN CONSENT OF PDDA.

DRAWING: LOCAL OPERATING PANEL CONTROL SCHEMATIC EMERGENCY GENERATOR
PROJECT: Washington State Ferries 144 Car Ferry
ALL DIMENSIONS ARE IN INCHES UNLESS OTHERWISE SPECIFIED
SCALE: NONE

		DATE
DESIGNED	RAB	10-13-05
CHECKED	KJC	10-13-05
DRAFTED	DMD	10-13-05

SHEET 2 OF 3
DRAWING NO. 8-6176206-E1
REV. C

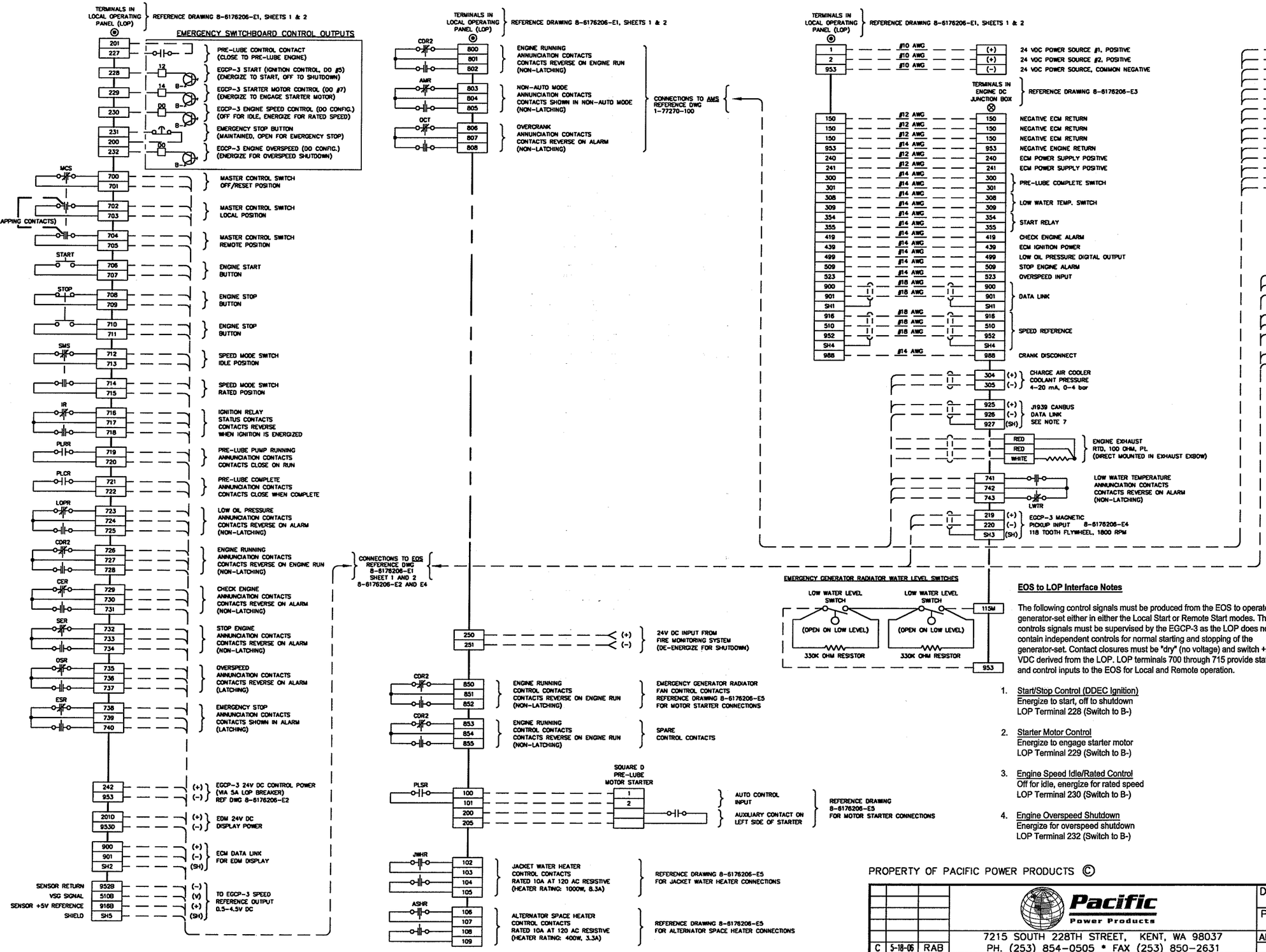

NOTES:

1. ALL CONTACTS RATED 5A AT 24VDC/120VAC RESISTIVE EXCEPT AS NOTED.
2. LOP = LOCAL OPERATING PANEL
3. EOS = ENGINEER'S OPERATING STATION
4. AMS = ALARM AND MONITORING SYSTEM

EOS to LOP Interface Notes

The following control signals must be produced from the EOS to operate a generator-set either in either the Local Start or Remote Start modes. These controls signals must be supervised by the EGCP-3 as the LOP does not contain independent controls for normal starting and stopping of the generator-set. Contact closures must be "dry" (no voltage) and switch +24 VDC derived from the LOP. LOP terminals 700 through 715 provide status and control inputs to the EOS for Local and Remote operation.

1. Start/Stop Control (DDEC Ignition)
   Energize to start, off to shutdown
   LOP Terminal 228 (Switch to B-)
2. Starter Motor Control
   Energize to engage starter motor
   LOP Terminal 229 (Switch to B-)
3. Engine Speed Idle/Rated Control
   Off for idle, energize for rated speed
   LOP Terminal 230 (Switch to B-)
4. Engine Overspeed Shutdown
   Energize for overspeed shutdown
   LOP Terminal 232 (Switch to B-)
5. Pre-Lube Control (LOP Terminals 201 and 227) and Emergency Stop Shutdown (LOP Terminals 201 and 231) are independently controlled at either the EOS or the LOP. The EOS control for these functions is intended to be from separate switches supplied by switchgear manufacturer.
6. LOP status and alarm contacts for EOS use are provided on terminals 716 through 740 for the Ship Service Generators and terminals 716 through 743 for the Emergency Generator.
7. J1939 must follow the J1939 wiring guidelines including terminal resistors. The J1939 wiring must be twisted at nine turns per foot. Refer to SAE J1939-11 for further information.

Reference Documents

Pacific Power Products Emergency Generator LOP Schematics, 806176206-E1
Woodward EGCP-3 Installation Manual, 26122E
Woodward EGCP-3 Operation Manual, 26194B

— — — DENOTES SHIPYARD WIRING
——— DENOTES PPPC WIRING
— — DENOTES OVERLAPPING CONTACTS BY PPPC

PROPERTY OF PACIFIC POWER PRODUCTS ©

REV	DATE	CHECKED	
C	5-18-06	RAB	
B	4-24-06	RAB	
A	4-10-06	RAB	

Pacific Power Products
7215 SOUTH 228TH STREET, KENT, WA 98037
PH. (253) 854-0505 * FAX (253) 850-2631

PROPRIETARY NOTICE:
THIS DRAWING AND THE INFORMATION IT CONTAINS IS THE PROPERTY OF PDDA AND IS CONSIDERED CONFIDENTIAL AND MAY NOT BE REPRODUCED, COPIED, OR USED IN PART OR WHOLE WITHOUT THE WRITTEN CONSENT OF PDDA.

DRAWING: SYSTEM CONTROL WIRING INTERCONNECT DIAGRAM EMERGENCY GENERATOR

PROJECT: Washington State Ferries 144 Car Ferry

ALL DIMENSIONS ARE IN INCHES UNLESS OTHERWISE SPECIFIED

		DATE	SHEET 3 OF 3	SCALE: NONE	
DESIGNED	RAB	10-13-05	DRAWING NO.		REV.
CHECKED	KJC	10-13-05	8-6176206-E1		C
DRAFTED	DMD	10-13-05			