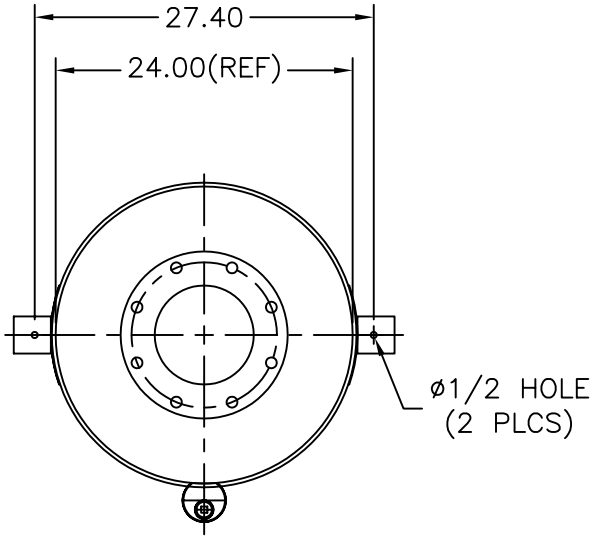

OUTLET END VIEW

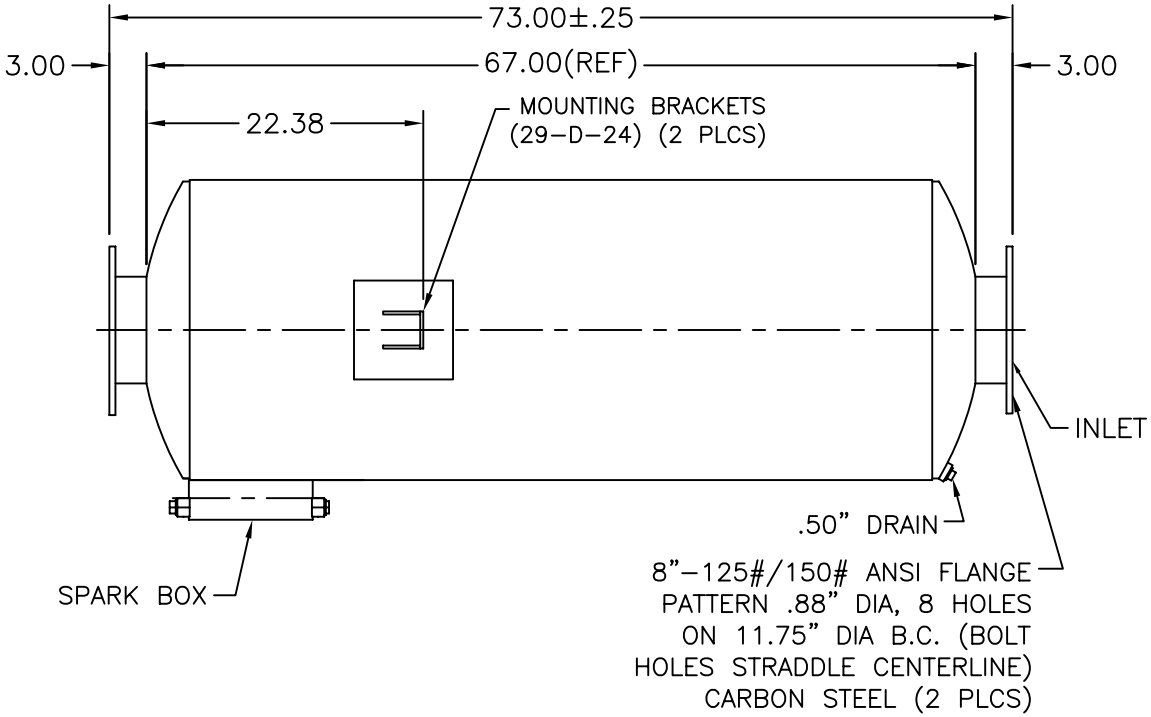

SIDE VIEW

Nominal Attenuation Curve for 202–5108 TO 202–5112
OCTAVE BAND (Consult Factory for Specific Applications)

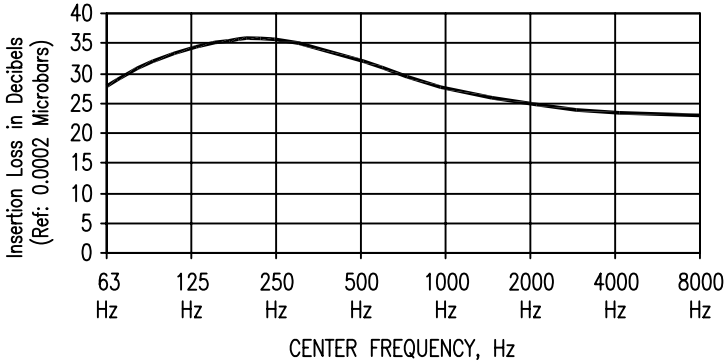

FINISH: NONE (316L SS)
APPROX. WT: 305 LBS.
NOTE: ALL DIMENSIONS ARE IN INCHES.

TOLERANCES (EXCEPT AS NOTED)	REVISIONS				GT EXHAUST SYSTEMS, INC		
	NO.	DESCRIPTION	DATE	BY	202–5108–1–S–30530: 8" CRITICAL GRADE SIL		
DECIMAL: .12"					DRAWN BY: MARISSA	SCALE: NONE	MATERIAL: 100% 316L/HRS
FRACTIONAL: 1/8"					APP'D BY:	DATE: 07/27/05	DWG. NO.
ANGULAR: 2					CUSTOMER:		30530