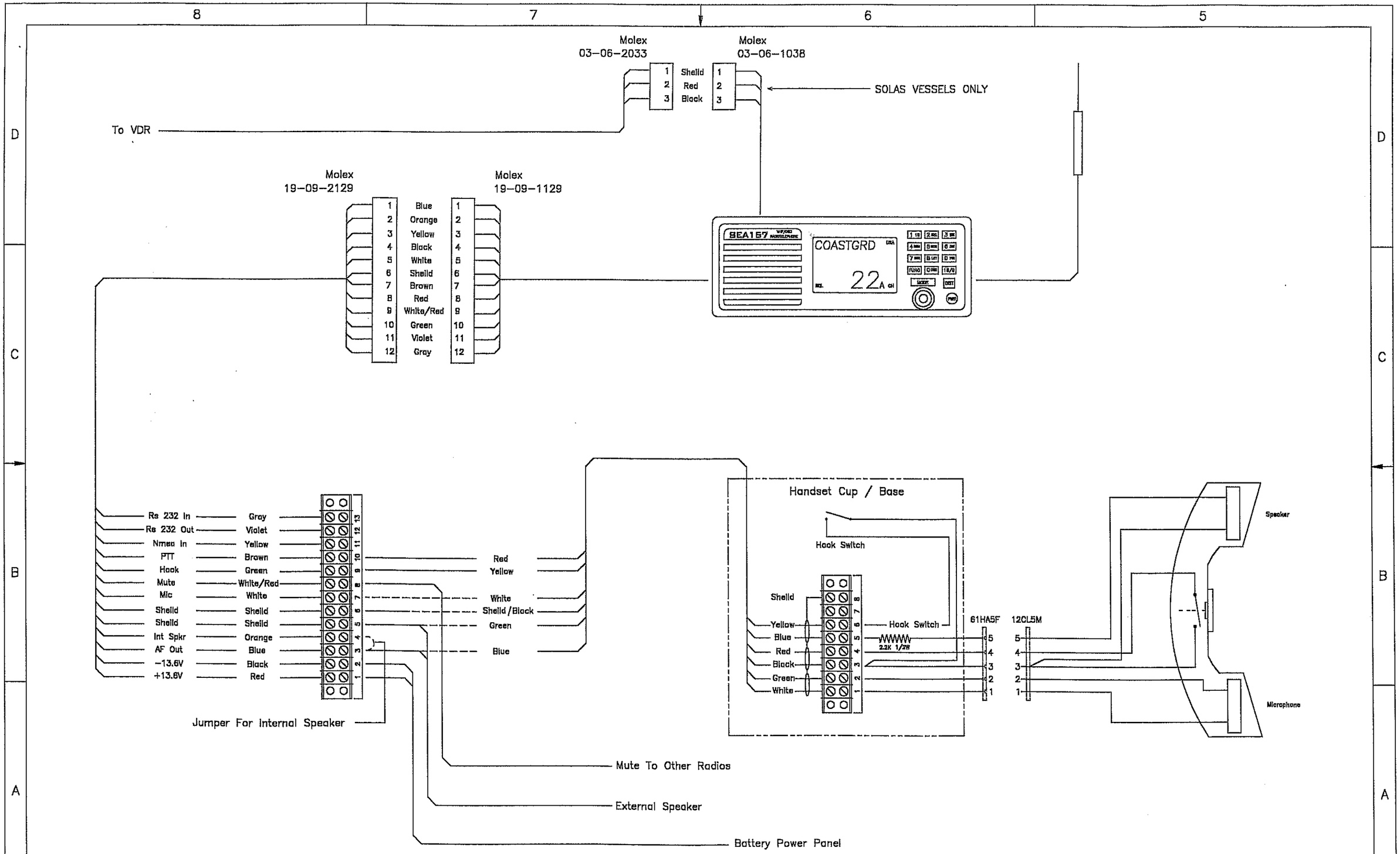

PLOT PARAMETER TABLE: WSF STD

PLOT SCALE (PLOT UNITS = DRAWING UNITS): 1.0 = NONE

APPROVED:	DESIGN: FB	CHECKED: FB	DATE: 01/17/04
	DRAWN: FB	CHECKED: FB	SCALE: NONE
DWG NO. SEA 157 DIAGRAM		SH. 1 OF XX	REV. -

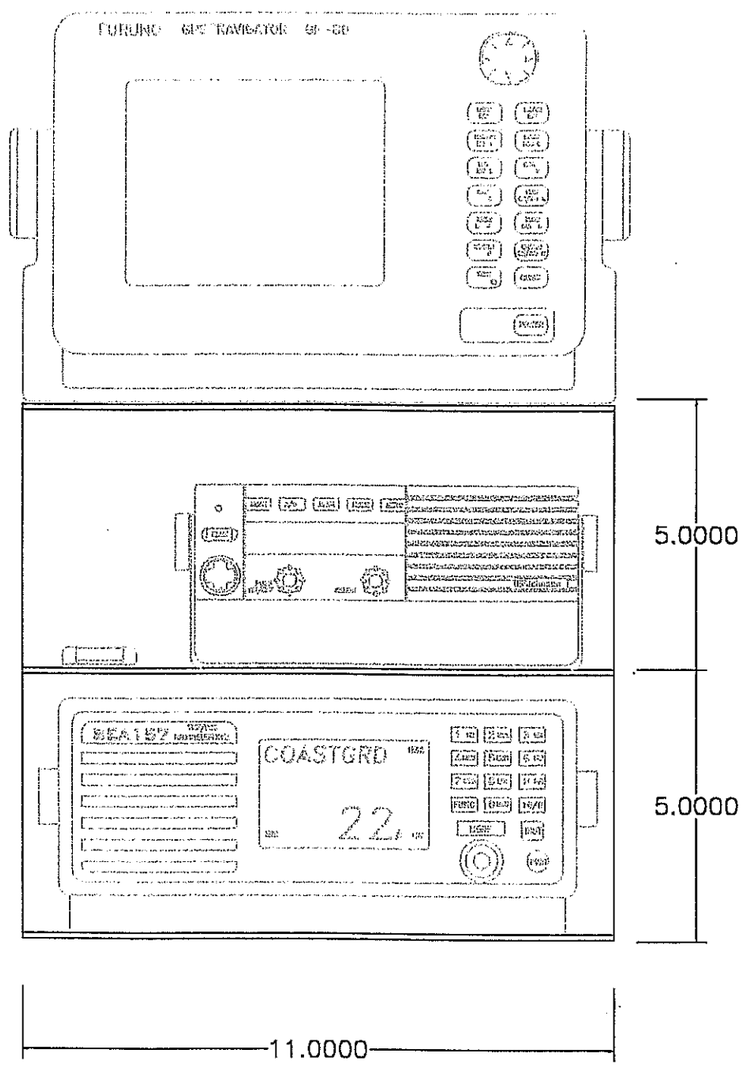

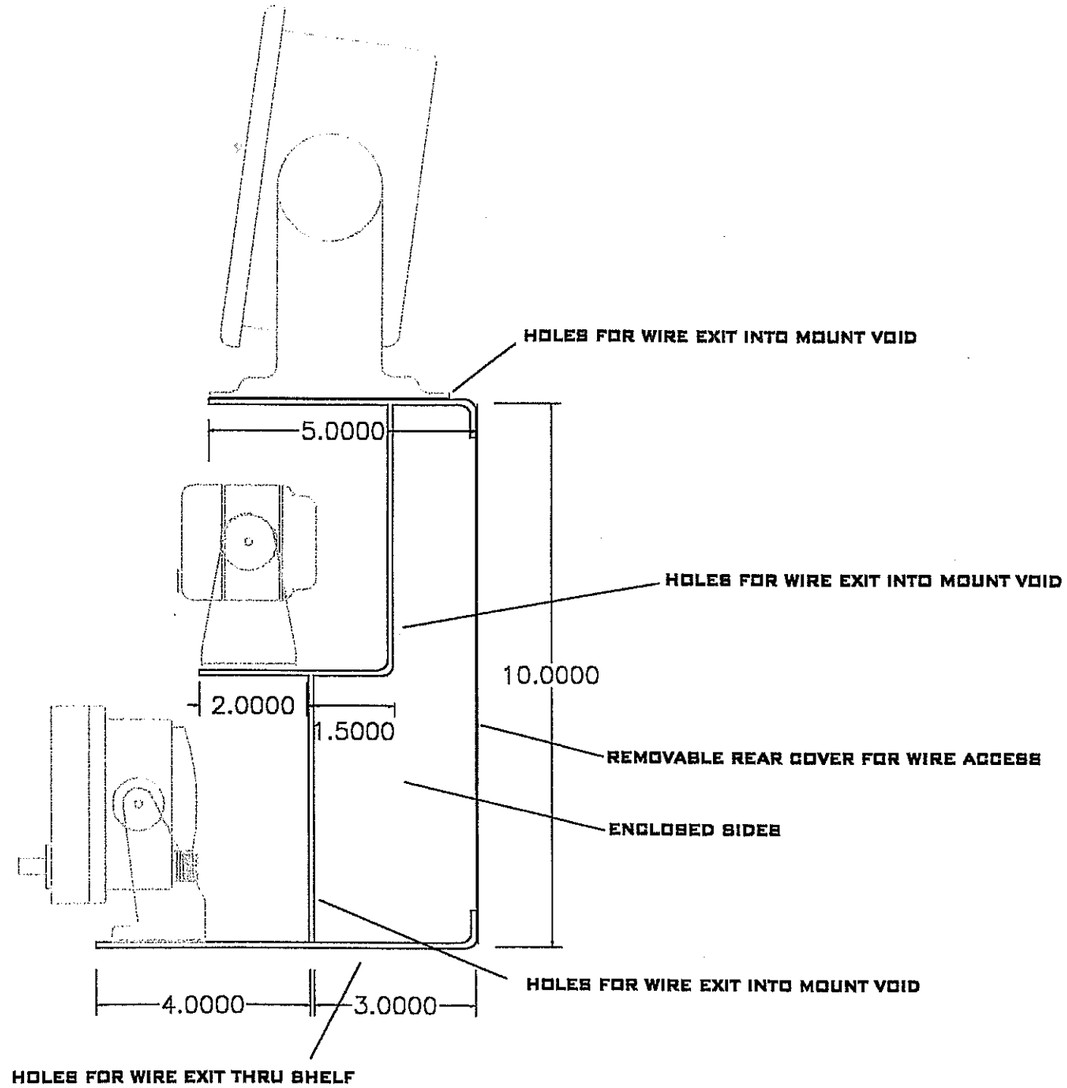

RECOMMENDED RADIO MOUNTING SYSTEM

DIMENSIONS CAN BE ADJUSTED / CHANGED FOR BEST FIT

PLOT PARAMETER TABLE: WSF STD			
PLOT SCALE (PLOT UNITS = DRAWING UNITS): 1.0 = NONE			
APPROVED:	DESIGN: FB	CHECKED: FB	DATE: 05/29/03
	DRAWN: FB	CHECKED: FB	SCALE: NONE
DWG NO. RADIO MOUNT		SH. 1 OF 1	REV. –

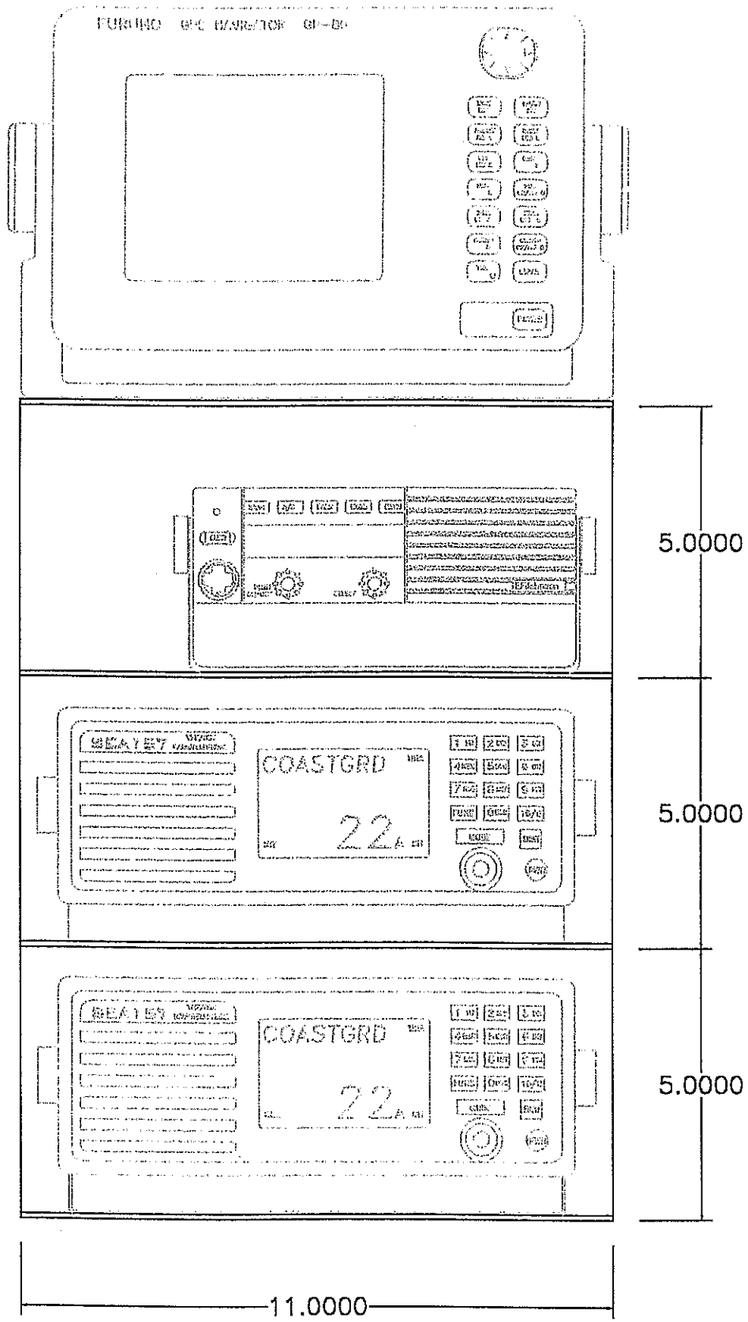

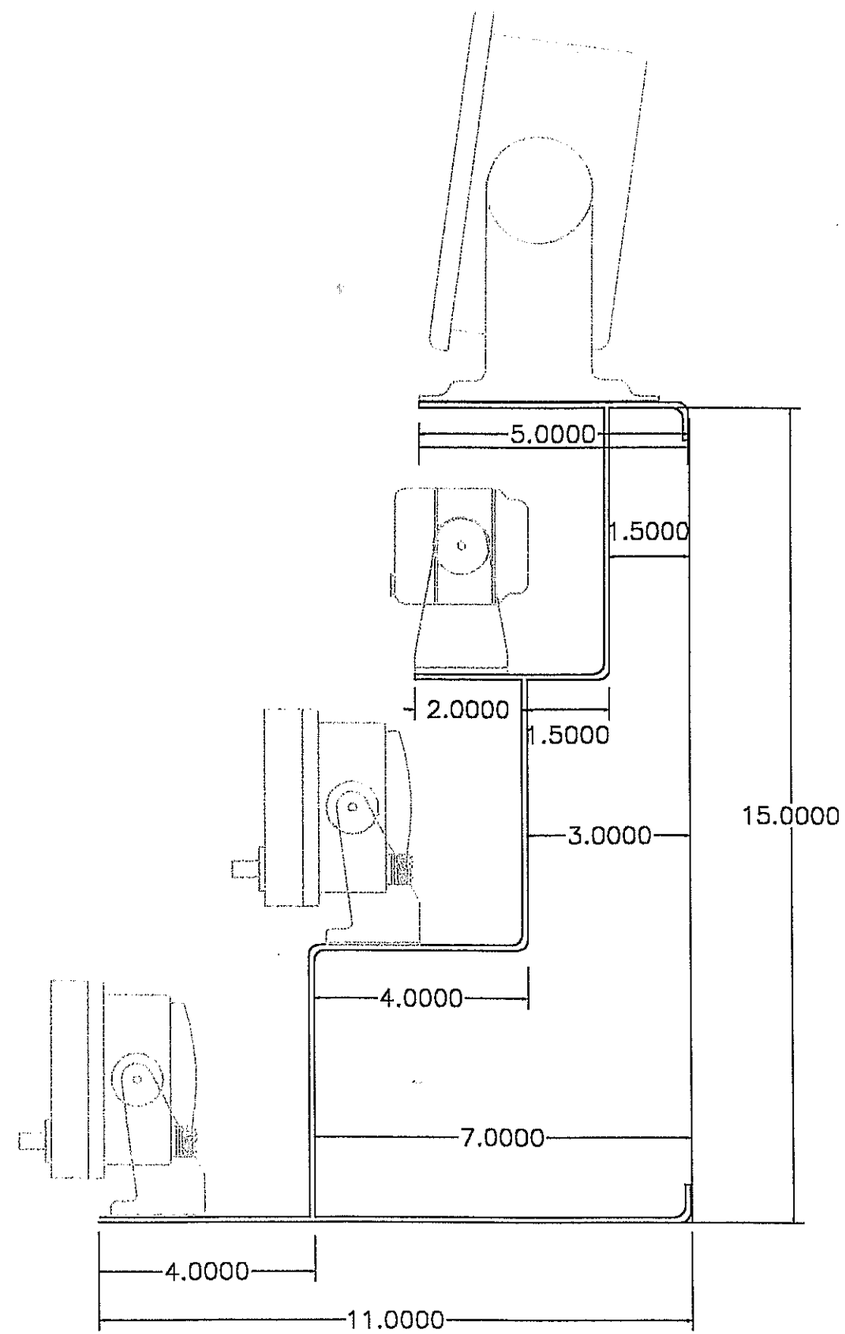

PLOT PARAMETER TABLE: VSF STD			
PLOT SCALE (PLOT UNITS = DRAWING UNITS): 1.0 = NONE			

APPROVED:	DESIGN: FB	CHECKED: FB	DATE: 07/19/02
	DRAWN: FB	CHECKED: FB	SCALE: NONE
DWG NO. RADIO MOUNT		SH. 1 OF 1	REV. –