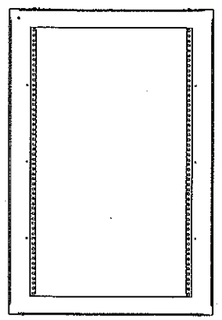

TOP VIEW

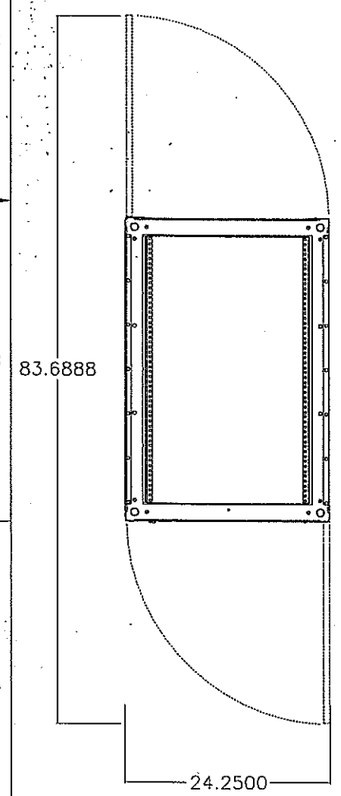

BOTTOM VIEW

25' BY 84' REQUIRED FLOOR SPACE
FOR PROPER SERVICE ACCESS

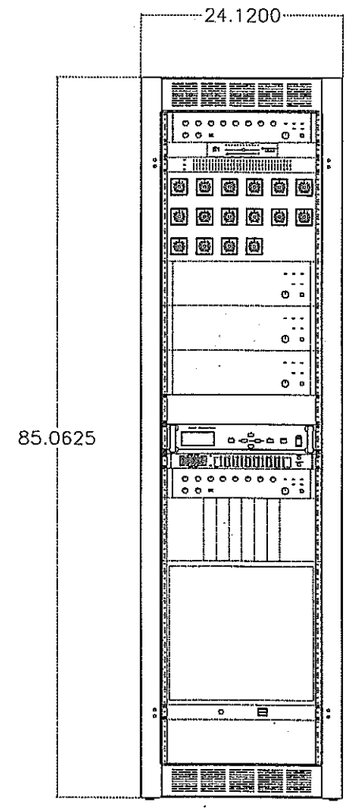

FRONT VIEW

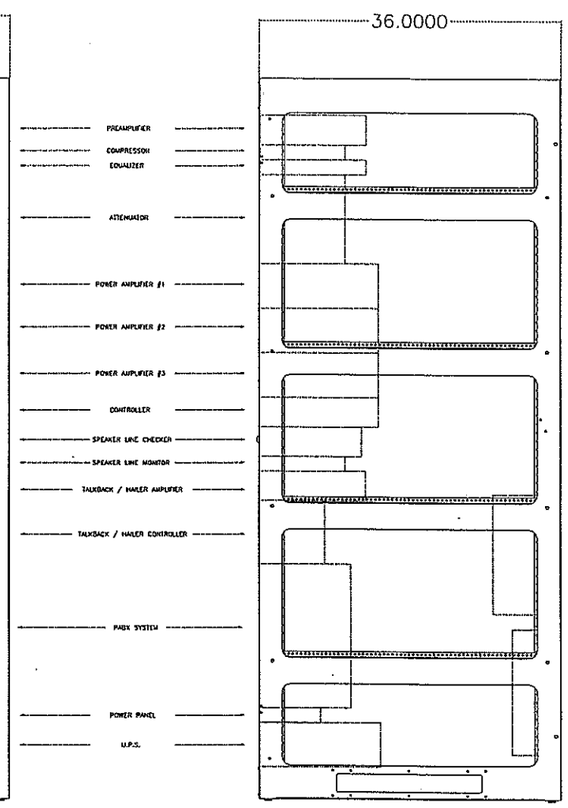

SIDE VIEW

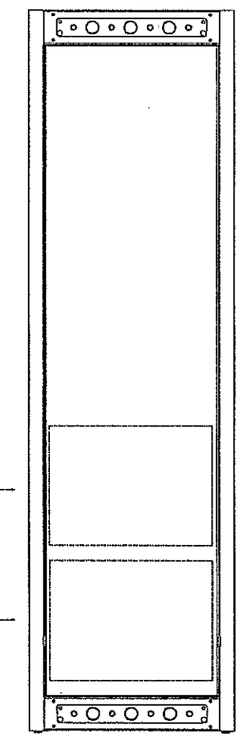

REAR VIEW

Atlas Soundolier FMA44-36G-962 Cabinet

APPROVED:	DESIGN: FRB	CHECKED: FRB	DATE: 06/06/06
	DRAWN: FRB	CHECKED: FRB	SCALE: NONE
DWG NO. PABX Cabinet		SH. 1 OF XX	REV. -

PLOT PARAMETER TABLE:	WSF STD
PLOT SCALE (PLOT UNITS = DRAWING UNITS):	1.0 = NONE

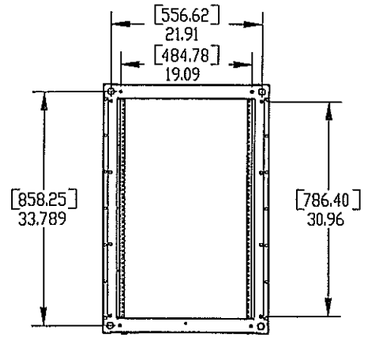

BTM VIEW

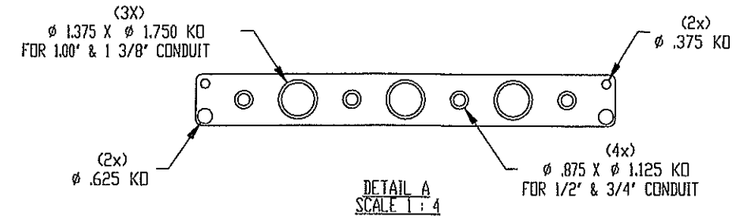

DETAIL A
SCALE 1 : 4

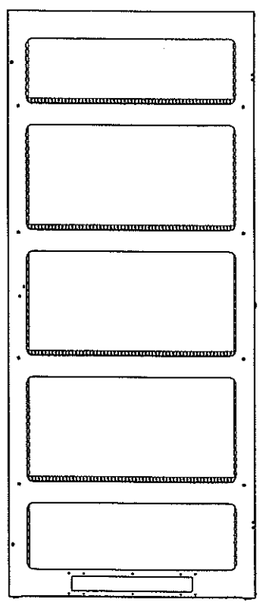

RIGHT VIEW

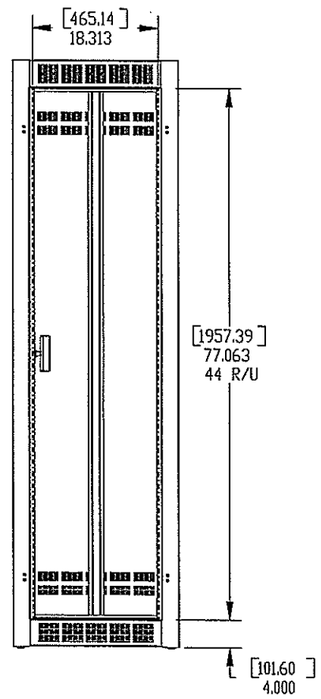

FRONT VIEW

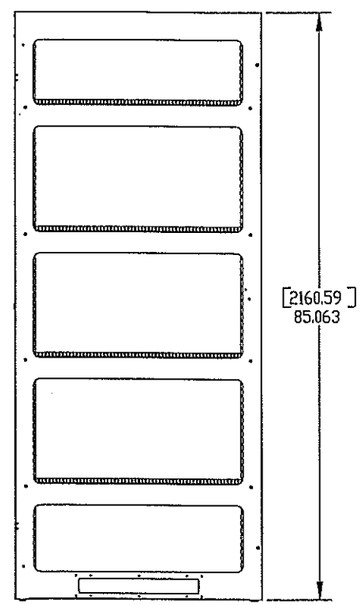

LEFT VIEW

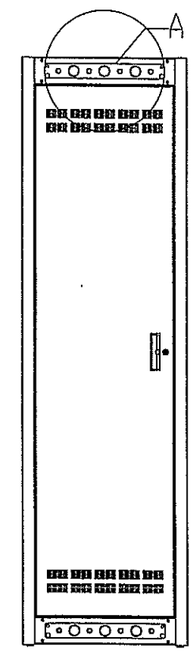

REAR VIEW

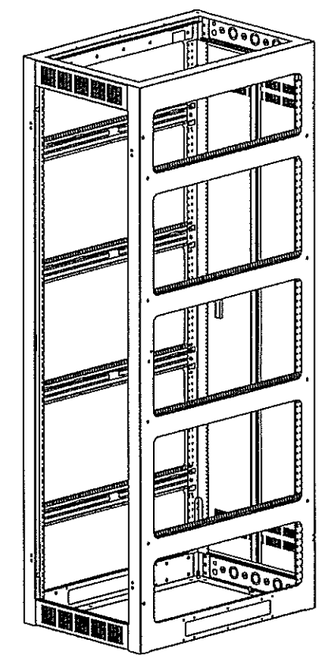

ISOMETRIC

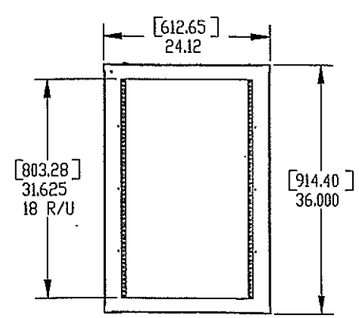

TOP VIEW

PROPRIETARY AND CONFIDENTIAL
THE INFORMATION CONTAINED IN THIS DRAWING IS THE SOLE PROPERTY OF MOTEXCORP. ANY REPRODUCTION IN PART OR AS A WHOLE WITHOUT THE WRITTEN PERMISSION OF MOTEXCORP IS PROHIBITED.

MODEL: FMA44-36G

SCALE: 1:14

SIZE: C

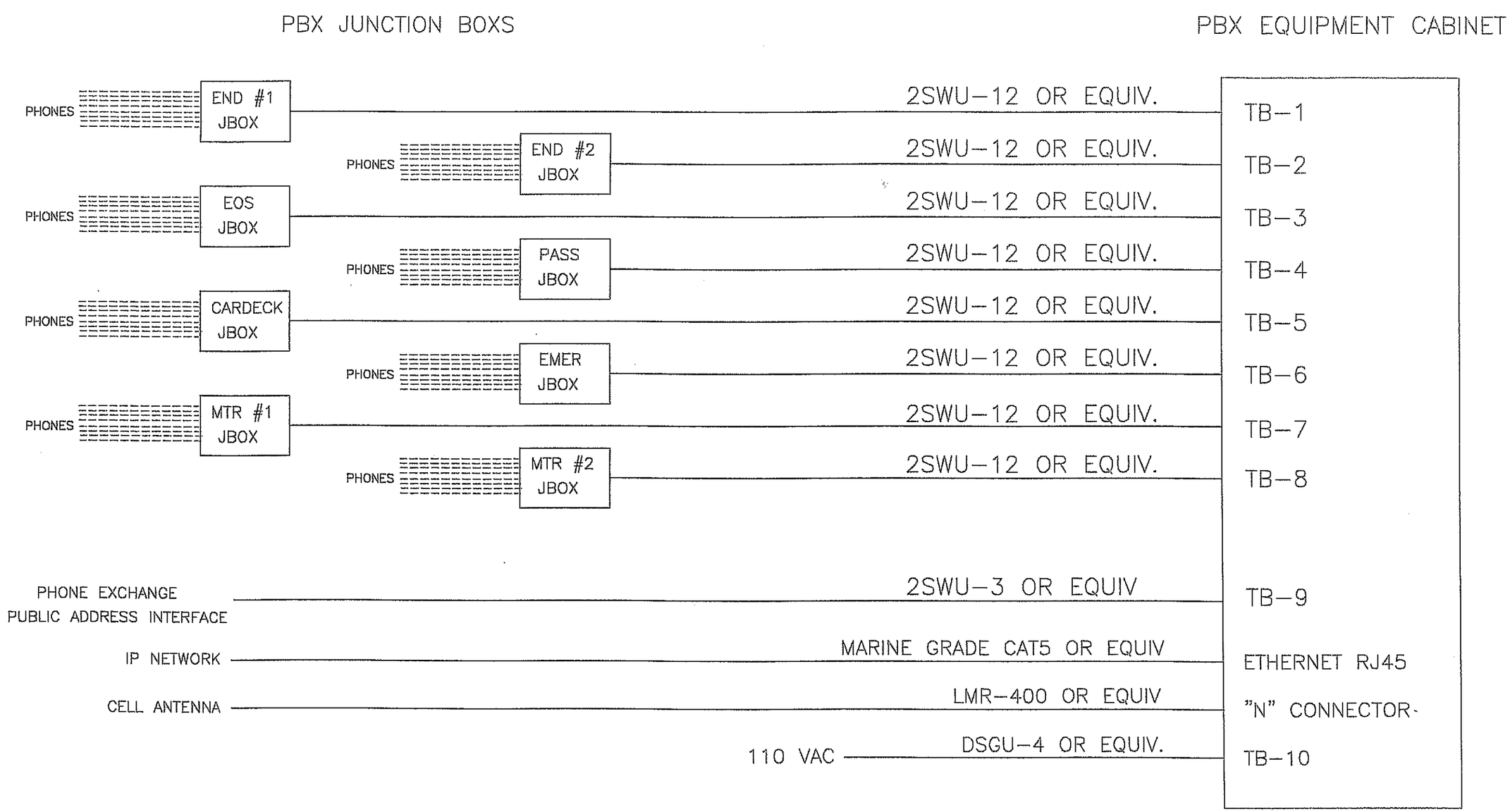

PLOT PARAMETER TABLE: WSF STD			
PLOT SCALE (PLOT UNITS = DRAWING UNITS): 1.0 = NONE			
APPROVED:	DESIGN: FB	CHECKED: FB	DATE: 09/10/03
	DRAWN: FB	CHECKED: FB	SCALE: NONE
DWG NO. CABLE REQUIREMENTS		SH. 1 OF XX	REV. –

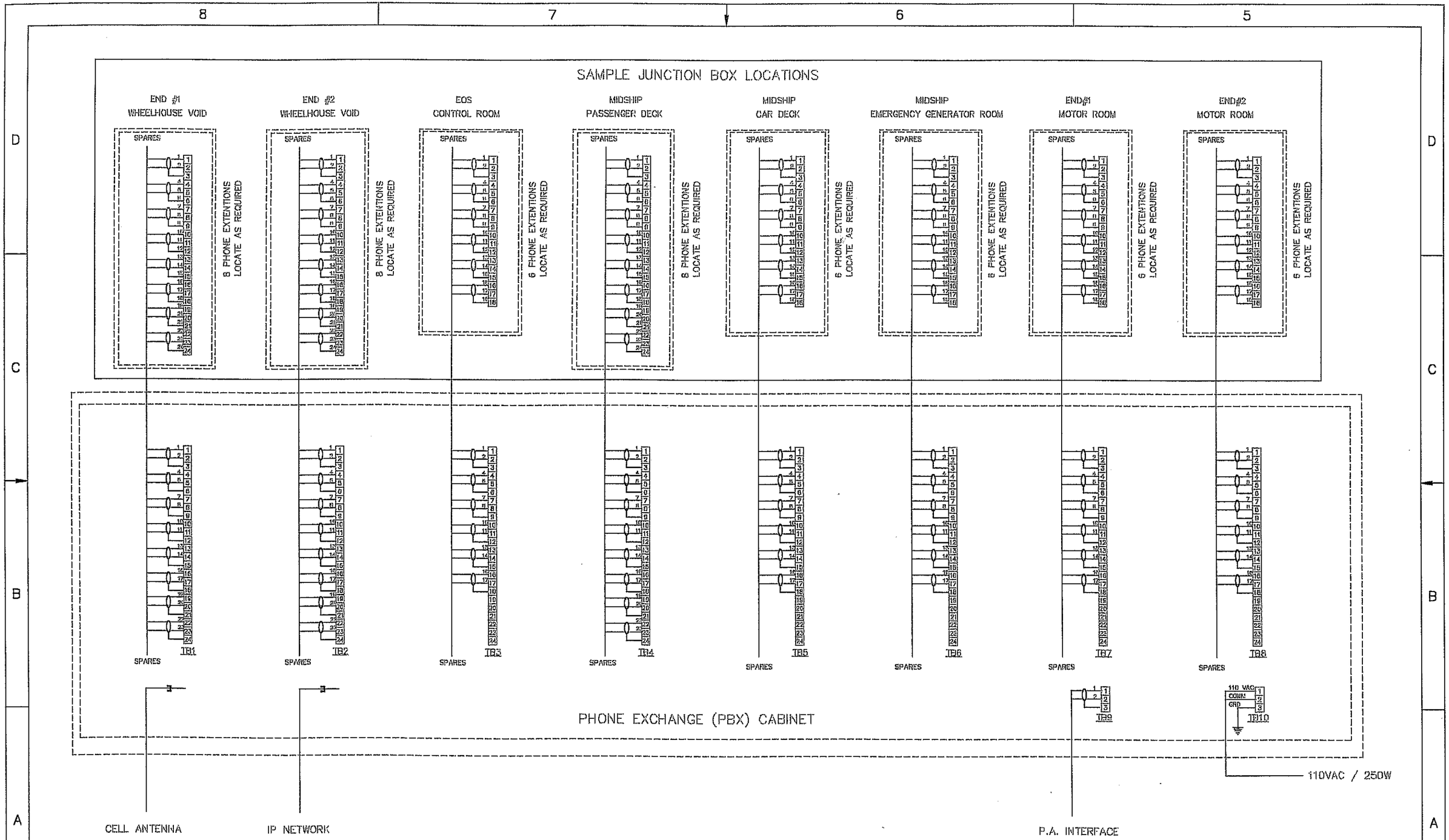

PLOT PARAMETER TABLE: WSF STD			
PLOT SCALE (PLOT UNITS = DRAWING UNITS): 1.0 = NONE			

APPROVED:	DESIGN: FB	CHECKED: FB	DATE: 08/30/04
	DRAWN: FB	CHECKED: FB	SCALE: NONE
DWG NO. PBX INTERCONNECT DIAGRAM		SH. 1 OF XX	REV. –

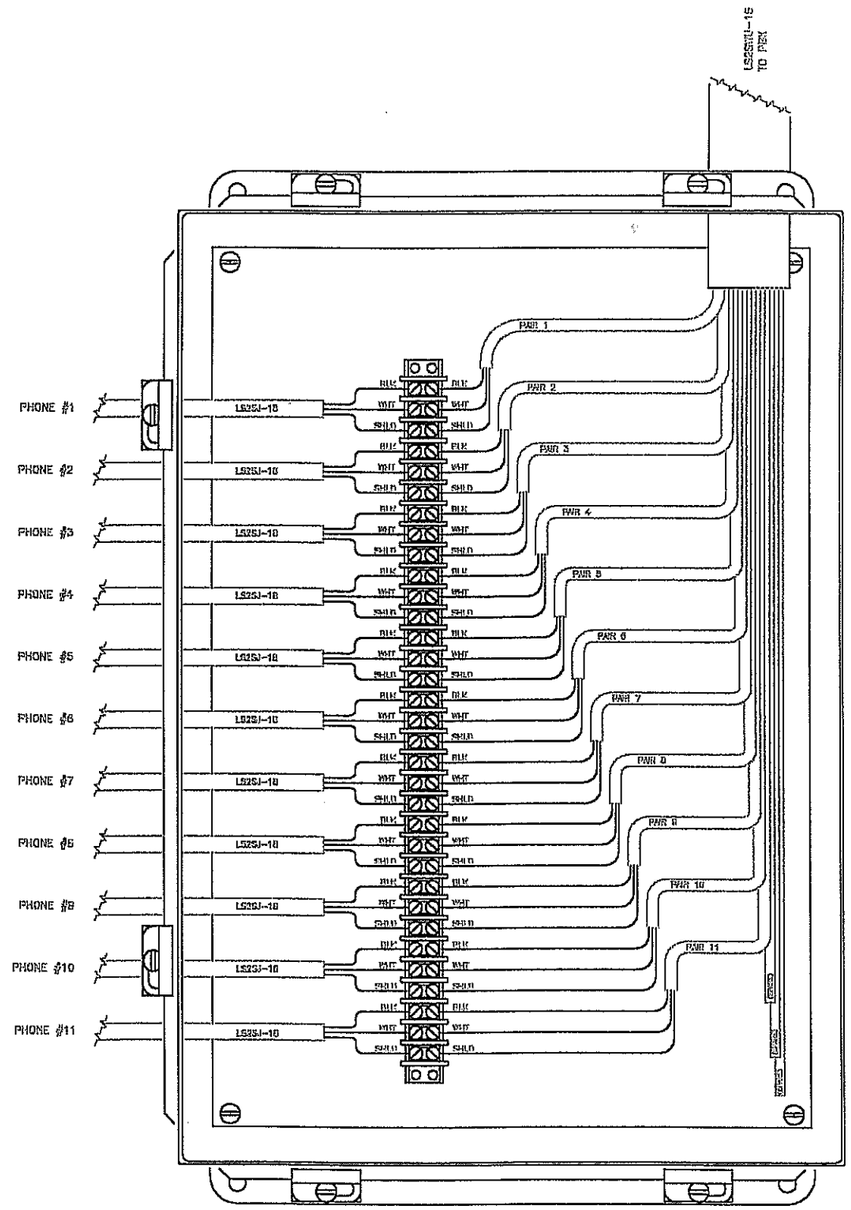

TYPICAL JUNCTION BOX CONFIGURATION

WIRE & TERMINAL COUNT TYPICAL

25% SPARES NEEDED

PLOT PARAMETER TABLE: WSF STD			
PLOT SCALE (PLOT UNITS = DRAWING UNITS): 1.0 = NONE			

APPROVED:	DESIGN: FB	CHECKED: FB	DATE: 10/15/03	
	DRAWN: FB	CHECKED: FB	SCALE: NONE	
DWG NO. PBX JUNCTION BOX			SH. 1 OF 1	REV. --