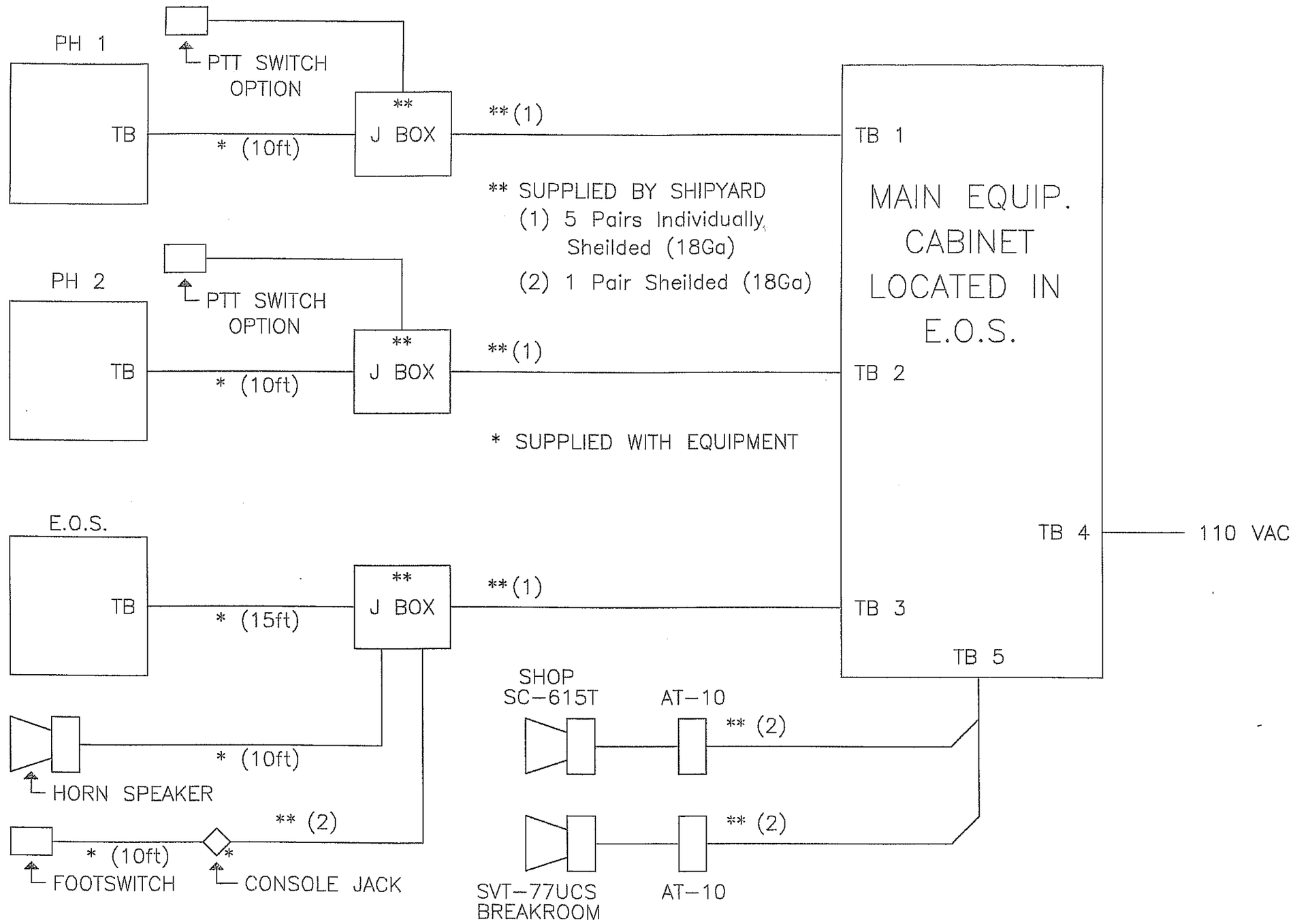

BTBC-3 INTERCOM

APPROVED:	DESIGN: FB	CHECKED: FB	DATE: 03/30/01
	DRAWN: FB	CHECKED: FB	SCALE: NONE
DWG NO. Wiring Requirements		SH. XX OF XX	REV. -

PLOT PARAMETER TABLE: WSF STD
PLOT SCALE (PLOT UNITS = DRAWING UNITS): 1.0 = NONE

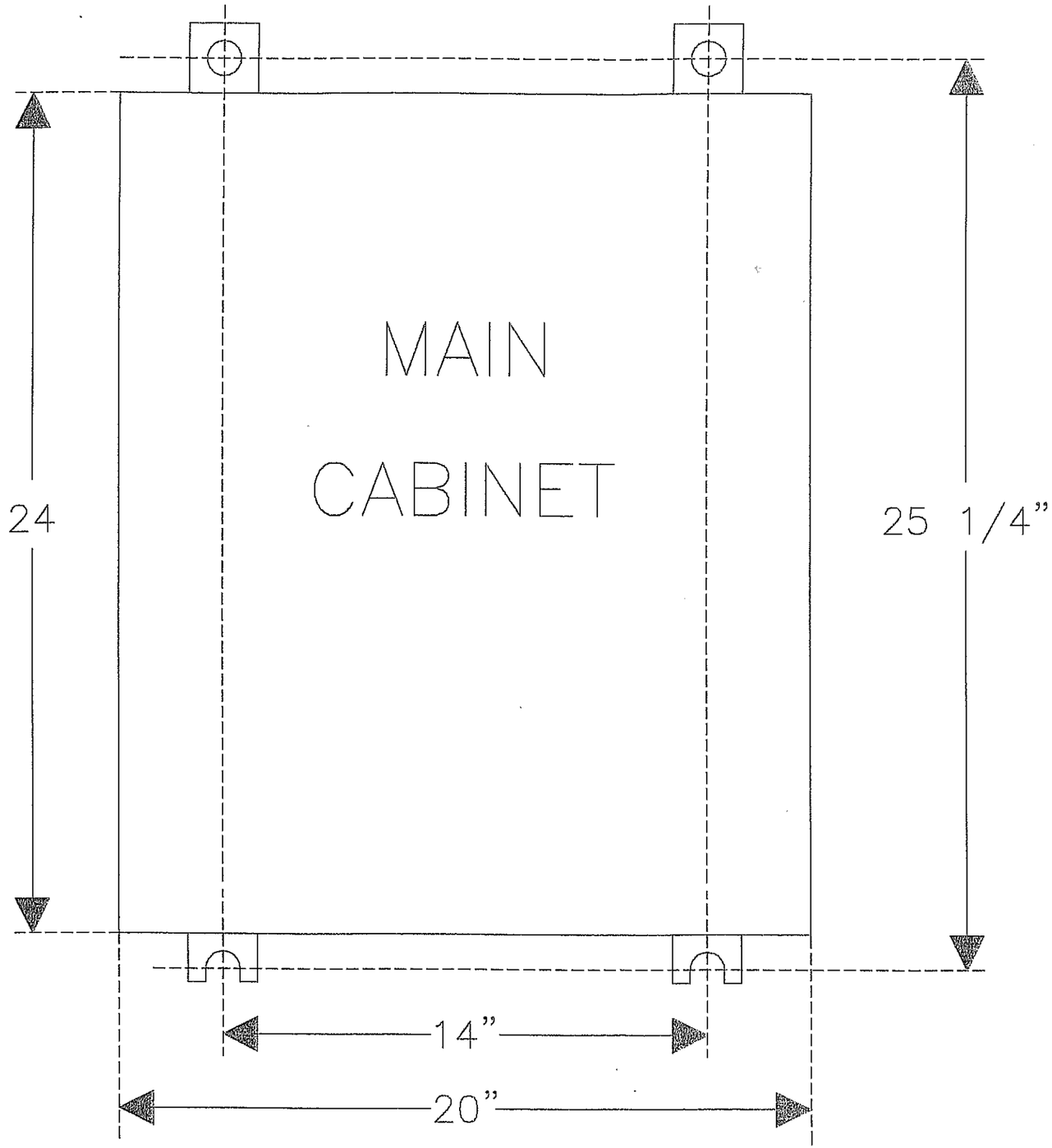

PLOT PARAMETER TABLE: WSF STD			
PLOT SCALE (PLOT UNITS = DRAWING UNITS): 1.0 = NONE			

APPROVED:	DESIGN: FB	CHECKED: FB	DATE: 03/30/01
	DRAWN: FB	CHECKED: FB	SCALE: NONE
DWG NO. Cabinet Mounting Diagram		SH. XX OF XX	REV. –

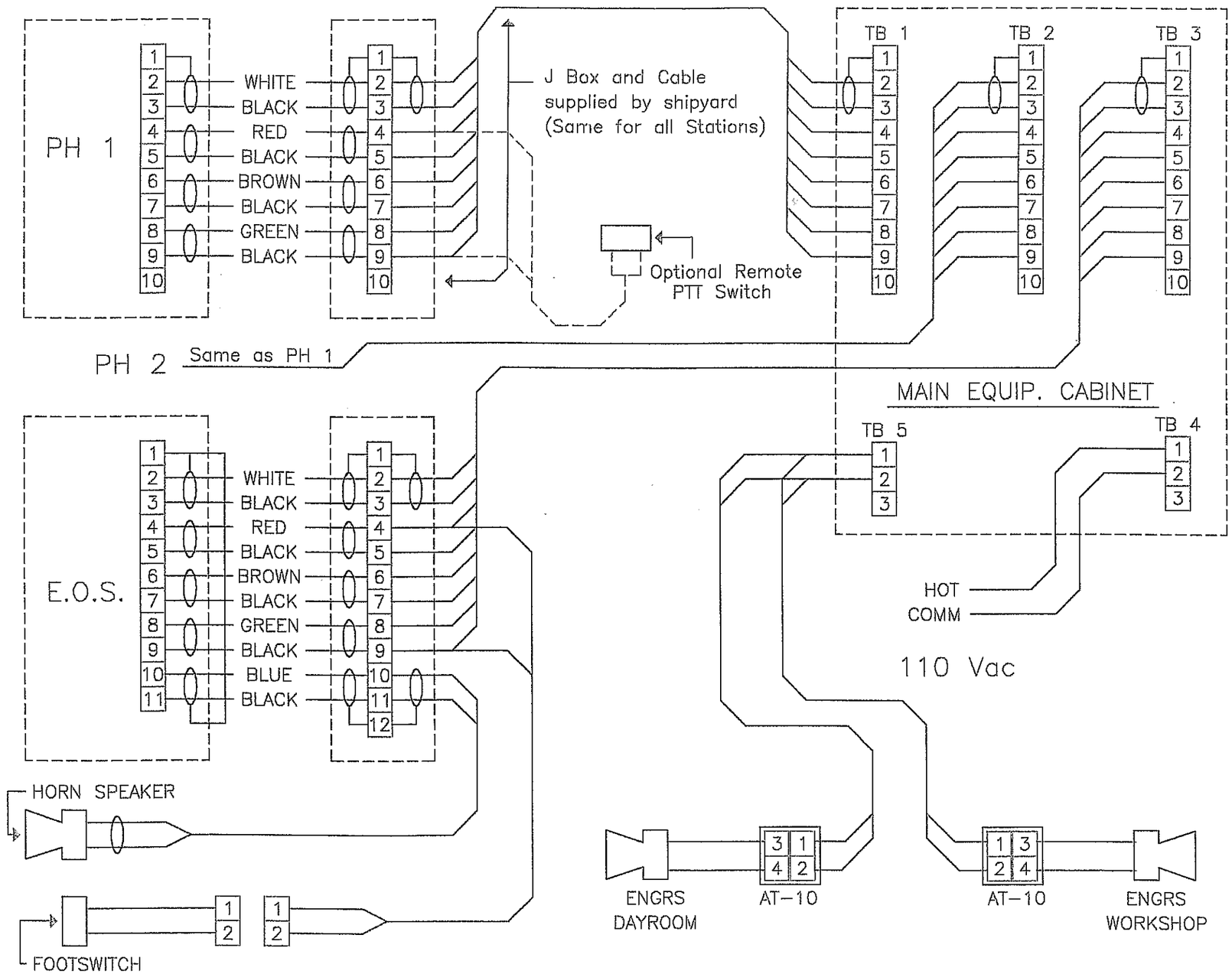

BTBC-3 INTERCOM

APPROVED:	DESIGN: FB	CHECKED: FB	DATE: 03/30/01
	DRAWN: FB	CHECKED: FB	SCALE: NONE
DWG NO. Connection Diagram		SH. XX OF XX	REV. -

PLOT PARAMETER TABLE: WSF STD

PLOT SCALE (PLOT UNITS = DRAWING UNITS): 1.0 = NONE

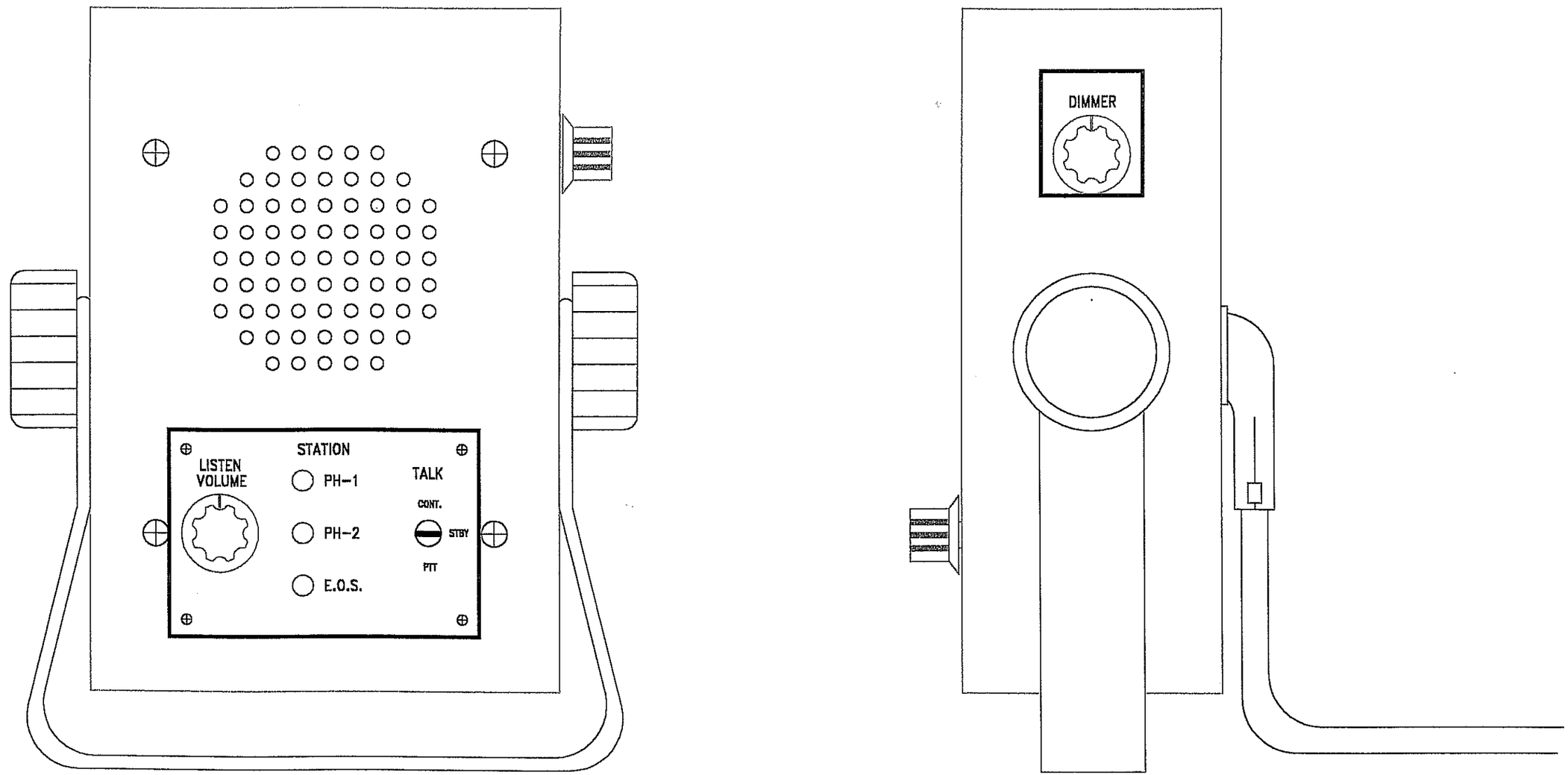

BTBC-3 INTERCOM (Standard)

APPROVED:	DESIGN: FB	CHECKED: FB	DATE: 03/30/01
	DRAWN: FB	CHECKED: FB	SCALE: NONE
DWG NO. Control Station Outline		SH. XX OF XX	REV. -

PLOT PARAMETER TABLE: WSF STD

PLOT SCALE (PLOT UNITS = DRAWING UNITS): 1.0 = NONE

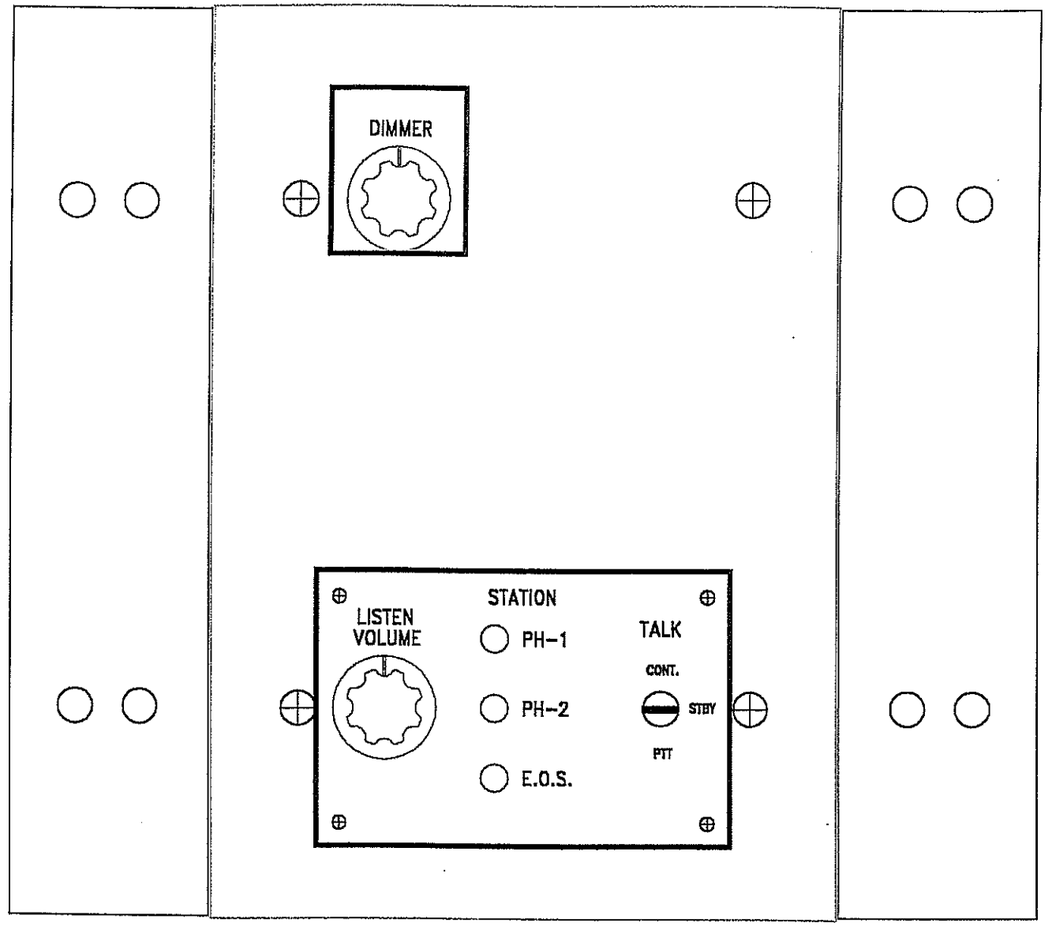

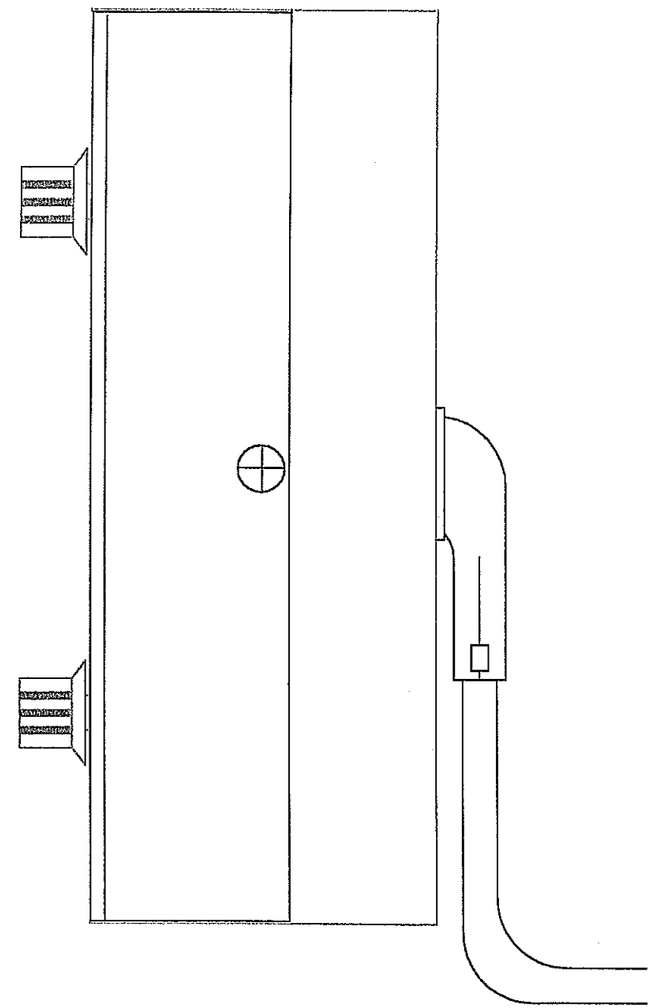

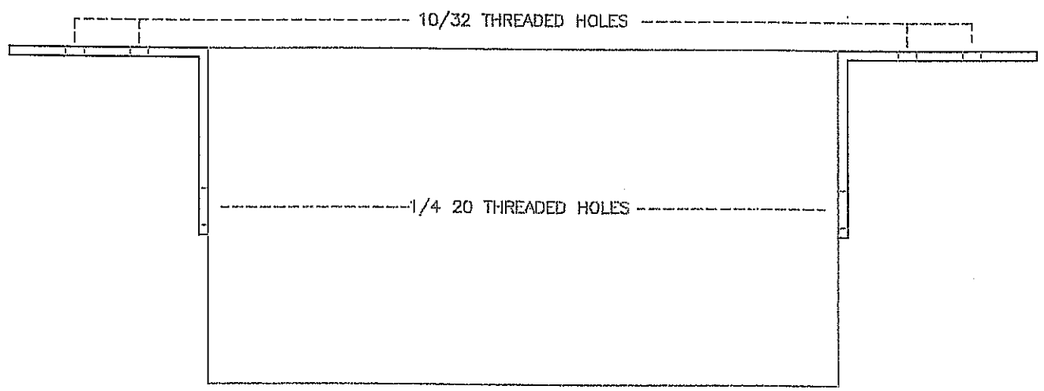

BTBC-3 INTERCOM (Remote / Flush Mount)

APPROVED:	DESIGN: FB	CHECKED: FB	DATE: 03/30/01
	DRAWN: FB	CHECKED: FB	SCALE: NONE
DWG NO. Control Station Outline		SH. XX OF XX	REV. --

PLOT PARAMETER TABLE: WSF STD

PLOT SCALE (PLOT UNITS = DRAWING UNITS): 1.0 = NONE