Washington State Department of Transportation

Publications Transmittal

Transmittal Number	Date
PT 05-030	June 2005
Publication Distribution	
To: All English *Design Manual* holders	
Publication Title	Publication Number
Design Manual (English) Revision 2005-2	M 22-01
Originating Organization	
Environmental and Engineering Service Center, Design Office, Design Policy, Standards, and Safety Research Unit through Engineering Publications	

Remarks:

Additional copies may be purchased from:
Washington State Department of Transportation
Finance and Administration
Directional Documents and Engineering Publications
PO BOX 47408
Olympia, WA 98504-7408

Phone: (360) 705-7430
Fax: (360) 705-6861
E-mail: engrpubs@wsdot.wa.gov

Instructions:
Page numbers and corresponding sheet-counts are given in the table below to indicate portions of the *Design Manual* that are to be removed and inserted to accomplish this revision.

Chapter	Remove		Insert	
	Pages	Sheets	Pages	Sheets
Foreword	i	1	i	1
Letters List	N/A	N/A	N/A	1
Contents	1-25	13	1-26	13
100,"Manual Description" (NEW)	N/A	N/A	1-7	4
150, "Project Development Sequence" (NEW)	N/A	N/A	1-10	5
220, "Project Environmental Documentation"	1-14	7	1-5	3
240, "Environmental Permits and Approvals"	1-14	7	1-19	10
325, "Design Matrix Procedures"	15	1	15	1
340, "Minor Operational Enhancement Projects"	1-11	6	1-13	7
640, "Geometric Cross Section"	15	1	15	1
940, "Traffic Interchanges	1-2	1	1-2	1
1025, "Pedestrian Design Considerations"	1-2	1-2	1-2	1
1050, High Occupancy Vehicle Facilities"	1-10	5	1-10	5
1055, "HOV Direct Access" (NEW)	N/A	N/A	1-26	13
1460,"Fencing"	1-3	2	1-3	2
Index	1-18	9	1-18	9

Distributed By	Phone Number	Signature
Directional Documents and Engineering Publications	(360) 705-7430 FAX: 705-6861	Stephanie Williams

Foreword

This *Design Manual* is for use by Washington State Department of Transportation engineering personnel. It provides policies, procedures, and methods for developing and documenting the design of improvements to the transportation network in Washington. The *Design Manual* has been developed for state facilities and may not be appropriate for all county roads or city streets that are not state highways.

The manual supplements the engineering analyses and judgment that must be applied to improvement and preservation projects. It provides uniform procedures for documenting and implementing design decisions. When proposed designs meet the requirements contained in the *Design Manual*, little additional documentation is required. The Federal Highway Administration (FHWA) has agreed to approve designs that follow the guidance in the *Design Manual*; therefore following the guidance presented is mandatory for state highway projects.

The design environment changes rapidly, and often without warning to the practitioner. To track every change, and to make improvements based upon each change, is not feasible. The intent of this manual is to provide recommended values for critical dimensions. Flexibility is permitted to encourage independent design that is tailored to particular situations. When flexibility is applied, and critical dimensions of a proposed design do not meet the *Design Manual* criteria, additional documentation is required to record the decision- making process.

The addition of new or modified design criteria to the *Design Manual* through the revision process does not imply that existing features are deficient or inherently dangerous. Nor does it suggest or mandate immediate engineering review or initiation of new projects.

Cost-effective and environmentally conscious design is emphasized, and consideration of the use of the highway corridor by transit, pedestrians, and bicyclists is included. Designers are encouraged to view the highway corridor beyond the vehicular movement context. To accommodate multimodal use, the criteria provided for one mode is to be appropriately adapted, as needed, at individual locations.

The complexity of transportation design requires the designer to make fundamental trade-off decisions that balance competing considerations. Although weighing these considerations adds to the complexity of design, it accounts for the needs of a particular project and the relative priorities of various projects and programs. Improvements must necessarily be designed and prioritized in light of finite transportation funding.

Updating the *Design Manual* is a continuing process, and revisions are issued periodically. Questions, observations, and recommendations are invited. Page iii is provided to encourage comments and to assure their prompt delivery. For clarification of the content of the *Design Manual*, contact the Headquarters Design Office. The e-mail address is: DesignManual@wsdot.wa.gov .

Harold Peterfeso, P.E.
State Design Engineer

Washington State Department of Transportation

Design Manual Supplements and Instructional Letters

June, 2005

In Effect	Chapter	Date	Type	Subject/Title
No No No	**HOV*** 940 1050	9/28/99	DM Supplement	Left-Side HOV Direct Access Connections (Chapter 940 revised September 2002) (Chapter 1050 revised May 2003)
No No	**HOV*** 1050	05/03/00	DM Supplement	Left-Side HOV Parallel On-Connection (Chapter 1050 revised May 2003)
Yes	650	10/09/02	DM Supplement	Stopping Sight Distance
Yes No	430 440	3/25/2004	DM Supplement	Design Speed
Yes Yes No **No**	430 1025 325 **340**	6/29/2004	DM Supplement	ADA Accessible Facilities on Road, Street, and Highway Projects
Yes	520	5/16/2005	DM Supplement	Pavement Type Selection Protocol (PTSP)

* The *HOV Direct Access Design Guide*, Draft M 22-98 – Replaced by new chapter 1055

Notes:

- Changes since the last revision to the *Design Manual* are shown in bold print.
- Items with **No** in the **In Effect** column were superseded by the latest revision and will be dropped from the next printing of this list.
- The listed items marked *yes* have been posted to the web at the following location:

http://www.wsdot.wa.gov/fasc/engineeringpublications/DesignLettersMemInstruction.htm

Contents

Date

Division 1 General Information

Chapter 100 Manual Description June 2005
- 100.01 Purpose
- 100.02 Presentation and Revisions
- 100.03 *Design Manual* Applications
- 100.04 How the *Design Manual* is to be Used
- 100.05 The Project Development Process
- 100.06 How the *Design Manual* is Organized

Chapter 120 Planning January 2005
- 120.01 General
- 120.02 References
- 120.03 Acronyms and Definitions
- 120.04 Legislation and Policy Development
- 120.05 Planning at WSDOT
- 120.06 Linking Transportation Plans
- 120.07 Linking WSDOT Planning to Programming

Chapter 140 Managing Project Delivery January 2005
- 140.01 General
- 140.02 References
- 140.03 Definitions
- 140.04 Resources
- 140.05 Managing Project Delivery
- 140.06 Responsibilities
- 140.07 Documentation

Chapter 141 Project Development Roles and Responsibilities for Projects with Structures January 2005
- 141.01 General
- 141.02 Procedures

Chapter 150 Project Development Sequence June 2005
- 150.01 General
- 150.02 References
- 150.03 Definitions
- 150.04 Project Development Sequence

Division 2 Hearings, Environmental, and Permits

Chapter 210 Public Involvement and Hearings December 1998
- 210.01 General
- 210.02 References
- 210.03 Definitions
- 210.04 Public Involvement
- 210.05 Hearings
- 210.06 Environmental Hearing
- 210.07 Corridor Hearing

			Date
	210.08	Design Hearing	
	210.09	Access Hearing	
	210.10	Combined Hearings	
	210.11	Administrative Appeal Hearing	
	210.12	Documentation	
Chapter 220	Project Environmental Documentation		June 2005
	220.01	Introduction	
	220.02	References	
	220.03	Definitions / Acronyms	
	220.04	Determining the Environmental Documentation	
	220.05	Identifying the Project Classification	
	220.06	Environmental Impact Statements – Class I Projects	
	220.07	Categorical Exclusions – Class II Projects	
	220.08	Environmental Assessments – Class III Projects	
	220.09	Reevaluations	
	220.10	Commitment File	
	220.11	Documentation	
Chapter 240	Environmental Permits and Approvals		June 2005
	240.01	Introduction	
	240.02	Permits and Approvals	
	240.03	Project Types and Permits	
	240.04	Design Process and Permit Interaction	

Division 3 Project Documentation

Chapter 315	Value Engineering		August 1998
	315.01	General	
	315.02	References	
	315.03	Definitions	
	315.04	Procedure	
	315.05	Documentation	
Chapter 325	Design Matrix Procedures		January 2005
	325.01	General	(325-15 June 2005)
	325.02	Selecting a Design Matrix	
	325.03	Using a Design Matrix	
Chapter 330	Design Documentation, Approval, and Process Review		December 2003
	330.01	General	
	330.02	References	
	330.03	Definitions	
	330.04	Design Documentation	
	330.05	Project Development	
	330.06	Scoping Phase	
	330.07	FHWA Approval	
	330.08	Design Approval	
	330.09	Process Review	

			Date
Chapter 340	Minor Operational Enhancement Projects		June 2005
	340.01	General	
	340.02	References	
	340.03	Definitions	
	340.04	Minor Operational Enhancement Matrix Procedures	
	340.05	Selecting a Minor Operational Enhancement Matrix	
	340.06	Project Type	
	340.07	Using a Minor Operational Enhancement Matrix	
	340.08	Project Approval	
	340.09	Documentation	

Division 4 Project Design Criteria

Chapter 410	Basic Design Level		May 2001
	410.01	General	(410-2 February 2002)
	410.02	Required Basic Safety Items of Work	
	410.03	Minor Safety and Minor Preservation Work	
Chapter 430	Modified Design Level		May 2001
	430.01	General	(430-1 and 2 January 2005)
	430.02	Design Speed	(430-3 and 4 May 2004)
	430.03	Roadway Widths	(430-10 February 2002)
	430.04	Ramp Lane Widths	
	430.05	Stopping Sight Distance	
	430.06	Profile Grades	
	430.07	Cross Slope	
	430.08	Fill Slopes and Ditch Inslopes	
	430.09	Intersections	
	430.10	Bridges	
	430.11	Documentation	
Chapter 440	Full Design Level		January 2005
	440.01	General	
	440.02	References	
	440.03	Definitions	
	440.04	Functional Classification	
	440.05	Terrain Classification	
	440.06	Geometric Design Data	
	440.07	Design Speed	
	440.08	Traffic Lanes	
	440.09	Shoulders	
	440.10	Medians	
	440.11	Curbs	
	440.12	Parking	
	440.13	Pavement Type	
	440.14	Structure Width	
	440.15	Right of Way Width	
	440.16	Grades	
	440.17	Documentation	

Date

Division 5 Soils and Paving

Chapter 510	Investigation of Soils, Rock, and Surfacing Materials		May 2004
	510.01	General	
	510.02	References	
	510.03	Materials Sources	
	510.04	Geotechnical Investigation, Design, and Reporting	
	510.05	Use of Geotechnical Consultants	
	510.06	Geotechnical Work by Others	
	510.07	Surfacing Report	
	510.08	Documentation	
Chapter 520	Design of Pavement Structure		January 2005
	520.01	Introduction	
	520.02	Estimating Tables	
Chapter 530	Geosynthetics		April 1998
	530.01	General (530-11, 12 and 13	May 2004)
	530.02	References	
	530.03	Geosynthetic Types and Characteristics	
	530.04	Geosynthetic Function Definitions and Applications	
	530.05	Design Approach for Geosynthetics	
	530.06	Design Responsibility	
	530.07	Documentation	

Division 6 Geometrics

Chapter 610	Highway Capacity		June 1989
	610.01	General	
	610.02	Definitions and Symbols	
	610.03	Design	
Chapter 620	Geometric Plan Elements		May 2004
	620.01	General (620-1 through 6	January 2005)
	620.02	References	
	620.03	Definitions	
	620.04	Horizontal Alignment	
	620.05	Distribution Facilities	
	620.06	Number of Lanes and Arrangement	
	620.07	Pavement Transitions	
	620.08	Procedures	
	620.09	Documentation	
Chapter 630	Geometric Profile Elements		May 2004
	630.01	General	
	630.02	References	
	630.03	Vertical Alignment	
	630.04	Coordination of Vertical and Horizontal Alignments	
	630.05	Airport Clearance	
	630.06	Railroad Crossings	
	630.07	Procedures	
	630.08	Documentation	

			Date
Chapter 640	Geometric Cross Section		January 2005
	640.01	General	(640-14 June 2005)
	640.02	References	
	640.03	Definitions	
	640.04	Roadways	
	640.05	Medians and Outer Separations	
	640.06	Roadsides	
	640.07	Roadway Sections	
	640.08	Documentation	
Chapter 641	Turning Roadways		January 2005
	641.01	General	
	641.02	References	
	641.03	Definitions	
	641.04	Turning roadway widths	
	641.05	Documentation	
Chapter 642	Superelevation		January 2005
	642.01	General	
	642.02	References	
	642.03	Definitions	
	642.04	Rates for Open Highways and Ramps	
	642.05	Rates for Low-Speed Urban Managed Access Highway	
	642.06	Existing Curves	
	642.07	Turning Movements at Intersections	
	642.08	Runoff for Highway Curves	
	642.09	Runoff for Ramp Curves	
	642.10	Documentation	
Chapter 650	Sight Distance		April 1998
	650.01	General	(650-3 June 1999)
	650.02	References	(650-4 November 1999)
	650.03	Definitions	(650-8 May 2000)
	650.04	Passing Sight Distance	(650-9 May 2001)
	650.05	Stopping Sight Distance	
	650.06	Decision Sight Distance	

Division 7 Roadside Safety Elements

Chapter 700	Roadside Safety		May 2003
	700.01	General	
	700.02	References	
	700.03	Definitions	
	700.04	Clear Zone	
	700.05	Hazards to be Considered for Mitigation	
	700.06	Median Considerations	
	700.07	Other Roadside Safety Features	
	700.08	Documentation	

			Date
Chapter 710	Traffic Barriers		January 2005
	710.01	General	
	710.02	References	
	710.03	Definitions	
	710.04	Project Requirements	
	710.05	Barrier Design	
	710.06	Beam Guardrail	
	710.07	Cable Barrier	
	710.08	Concrete Barrier	
	710.09	Special Use Barriers	
	710.10	Bridge Rails	
	710.11	Other Barriers	
	710.12	Documentation	
Chapter 720	Impact Attenuator Systems		January 2005
	720.01	Impact Attenuator Systems	
	720.02	Design Criteria	
	720.03	Selection	
	720.04	Documentation	

Division 8 Traffic Safety Elements

Chapter 810	Work Zone Traffic Control		December 2003
	810.01	General	
	810.02	References	
	810.03	Public Information	
	810.04	Work Zone Classification	
	810.05	Work Zone Types	
	810.06	Project Definition	
	810.07	Work Zone Safety	
	810.08	Regulatory Traffic Control Strategies	
	810.09	Traffic Control Plans and Devices	
	810.10	Documentation	
Chapter 820	Signing		November 1999
	820.01	General	
	820.02	References	
	820.03	Design Components	
	820.04	Overhead Installation	
	820.05	Mileposts	
	820.06	Guide Sign Plan	
	820.07	Documentation	
Chapter 830	Delineation		May 2000
	830.01	General	(830-5 May 2004)
	830.02	References	(830-6 January 2005)
	830.03	Pavement Markings	
	830.04	Guide Posts	
	830.05	Barrier Delineation	
	830.06	Wildlife Warning Reflectors	
	830.07	Documentation	

			Date
Chapter 840	Illumination		December 2003
	840.01	General	(840-15 and 16 May 2004)
	840.02	References	
	840.03	Definitions	
	840.04	Required Illumination	
	840.05	Additional Illumination	
	840.06	Design Criteria	
	840.07	Documentation	
Chapter 850	Traffic Control Signals		May 2001
	850.01	General	(850-15 and 16 May 2004)
	850.02	References	
	850.03	Definitions	
	850.04	Procedures	
	850.05	Signal Warrants	
	850.06	Conventional Traffic Signal Design	
	850.07	Documentation	
Chapter 860	Intelligent Transportation Systems		November 1999
	860.01	General	
	860.02	References	
	860.03	Traffic Data Collection	
	860.04	Traffic Flow Control	
	860.05	Motorist Information	
	860.06	Documentation	

Division 9 Interchanges and Intersections

Chapter 910	Intersections At Grade		January 2005
	910.01	General	
	910.02	References	
	910.03	Definitions	
	910.04	Design Considerations	
	910.05	Design Vehicle	
	910.06	Right-Turn Corners	
	910.07	Channelization	
	910.08	Roundabouts	
	910.09	U-Turns	
	910.10	Sight Distance at Intersections	
	910.11	Traffic Control at Intersections	
	910.12	Interchange Ramp Terminals	
	910.13	Procedures	
	910.14	Documentation	
Chapter 915	Roundabouts		May 2004
	915.01	General	(915-8 and 9 January 2005)
	915.02	References	(915-16 through 18 January 2005)
	915.03	Definitions	(915-22 January 2005)
	915.04	Roundabout Categories	
	915.05	Capacity Analysis	
	915.06	Geometric Design	
	915.07	Pedestrians	

			Date
	915.08	Bicycles	
	915.09	Signing and Pavement Marking	
	915.10	Illumination	
	915.11	Access, Parking, and Transit Facilities	
	915.12	Procedures	
	915.13	Documentation	
Chapter 920	Road Approaches		December 2003
	920.01	General	
	920.02	References	
	920.03	Definitions	
	920.04	Design Considerations	
	920.05	Road Approach Design Template	
	920.06	Sight Distance	
	920.07	Road Approach Location	
	920.08	Drainage Requirements	
	920.09	Procedures	
	920.10	Documentation	
Chapter 930	Railroad Grade Crossings		January 2005
	930.01	General	
	930.02	References	
	930.03	Plans	
	930.04	Traffic Control Systems	
	930.05	Pullout Lanes	
	930.06	Crossing Surfaces	
	930.07	Crossing Closure	
	930.08	Traffic Control During Construction and Maintenance	
	930.09	Railroad Grade Crossing Petitions and WUTC Orders	
	930.10	Section 130 Grade Crossing Improvement Projects	
	930.11	Light Rail	
	930.12	Documentation	
Chapter 940	Traffic Interchanges		September 2002
	940.01	General	(940-1 and 2 June 2005)
	940.02	References	(940-5 January 2005)
	940.03	Definitions	(940-11 January 2005)
	940.04	Interchange Design	(940-23 and 24 January 2005)
	940.05	Ramps	(940-28 January 2005)
	940.06	Interchange Connections	
	940.07	Ramp Terminal Intersections at Crossroads	
	940.08	Interchanges on Two-Lane Highways	
	940.09	Interchange Plans	
	940.10	Documentation	
Chapter 960	Median Crossovers		May 2004
	960.01	General	
	960.02	Analysis	
	960.03	Design	
	960.04	Approval	
	960.05	Documentation	

Date

Division 10 Auxiliary Facilities

Chapter 1010	Auxiliary Lanes		November 1999
	1010.01	General	(1010-2 and 8 May 2001)
	1010.02	References	(1010-5 and 6 May 2004)
	1010.03	Definitions	
	1010.04	Climbing Lanes	
	1010.05	Passing Lanes	
	1010.06	Slow Moving Vehicle Turnouts	
	1010.07	Shoulder Driving for Slow Vehicles	
	1010.08	Emergency Escape Ramps	
	1010.09	Chain-Up Area	
	1010.10	Documentation	
Chapter 1020	Bicycle Facilities		May 2001
	1020.01	General	(1020-25 and 26 September 2002)
	1020.02	References	
	1020.03	Definitions	
	1020.04	Planning	
	1020.05	Design	
	1020.06	Documentation	
Chapter 1025	Pedestrian Design Considerations		May 2001
	1025.01	General	(1025-1 June 2005)
	1025.02	References	(1025-7 through 11 May 2004)
	1025.03	Definitions	
	1025.04	Policy	
	1025.05	Pedestrian Human Factors	
	1025.06	Pedestrian Activity Generators	
	1025.07	Pedestrian Facility Design	
	1025.08	Documentation	
Chapter 1030	Safety Rest Areas and Traveler Services		December 2003
	1030.01	General	
	1030.02	References	
	1030.03	Documentation	
Chapter 1040	Weigh Sites		May 2000
	1040.01	General	(1040-5 and 6 May 2004)
	1040.02	Definitions	
	1040.03	Planning, Development, and Responsibilities	
	1040.04	Permanent Facilities	
	1040.05	Portable Facilities	
	1040.06	Shoulder Sites	
	1040.07	Federal Participation	
	1040.08	Procedures	
	1040.09	Documentation	

			Date
Chapter 1050	High Occupancy Vehicle Facilities		May 2003
	1050.01	General	(1050-1, 3, 5 and 9 June 2005)
	1050.02	Definitions	(1050-10 January 2005)
	1050.03	References	(1050-12 through 14 January 2005)
	1050.04	Preliminary Design and Planning	
	1050.05	Operations	
	1050.06	Design Criteria	
	1050.07	Documentation	
Chapter 1055	HOV Direct Access		June 2005
	1055.01	General	
	1055.02	References	
	1055.03	Definitions	
	1055.04	HOV Access Types and Locations	
	1055.05	Direct Access Geometrics	
	1055.06	Passenger Access	
	1055.07	Traffic Design Elements	
	1055.08	Documentation	
Chapter 1060	Transit Benefit Facilities		December 1991
	1060.01	Introduction	(1060-14 March 1994)
	1060.02	Definitions	(1060-16 through 18 March 1994)
	1060.03	Park and Ride Lots	(1060-19 May 2004)
	1060.04	Transfer/Transit Centers	(1060-20 through 22 March 1994)
	1060.05	Bus Stops and Pullouts	(1060-23 and 24 July 1994)
	1060.06	Passenger Amenities	(1060-25 through 34 March 1994)
	1060.07	Roadway and Vehicle Design Criteria Characteristics	(1060-35 and 36 July 1994) (1060-37 and 38 March 1994)
	1060.08	Intersection Radii	
	1060.09	Disabled Accessibility	
	1060.10	References	

Division 11 Structures

Chapter 1110	Site Data for Structures		December 2003
	1110.01	General	
	1110.02	References	
	1110.03	Required Data for All Structures	
	1110.04	Additional Data for Waterway Crossings	
	1110.05	Additional Data for Grade Separations	
	1110.06	Additional Data for Widenings	
	1110.07	Documentation	
Chapter 1120	Bridges		January 2005
	1120.01	General	
	1120.02	References	
	1120.03	Bridge Location	
	1120.04	Bridge Site Design Elements	
	1120.05	Documentation	

			Date
Chapter 1130	Retaining Walls and Steep Reinforced Slopes		May 2003
	1130.01	References (1130-22 and 23	December 1998)
	1130.02	General (1130-30	December 1998)
	1130.03	Design Principles	
	1130.04	Design Requirements	
	1130.05	Guidelines for Wall/Slope Selection	
	1130.06	Design Responsibility and Process	
	1130.07	Documentation	
Chapter 1140	Noise Barriers		May 2003
	1140.01	General	
	1140.02	References	
	1140.03	Design	
	1140.04	Procedures	
	1140.05	Documentation	

Division 12 Hydraulics

Chapter 1210	Hydraulic Design		September 2002
	1210.01	General	
	1210.02	References	
	1210.03	Hydraulic Considerations	
	1210.04	Safety Considerations	
	1210.05	Design Responsibility	

Division 13 Roadside Development

Chapter 1300	Roadside Development		January 2005
	1300.01	General	
	1300.02	References	
	1300.03	Legal Requirements	
	1300.04	*Roadside Classification Plan*	
	1300.05	*Roadside Manual*	
	1300.06	Project Development	
	1300.07	Documentation	
Chapter 1310	Contour Grading		December 2003
	1310.01	General	
	1310.02	References	
	1310.03	Procedures	
	1310.04	Recommendations	
	1310.05	Documentation	
Chapter 1320	Vegetation		January 2005
	1320.01	General	
	1320.02	References	
	1320.03	Discussion	
	1320.04	Design Guidelines	
	1320.05	Documentation	

			Date
Chapter 1330	Irrigation		December 2003
	1330.01	General	
	1330.02	References	
	1330.03	Design Considerations	
	1330.04	Documentation	
Chapter 1350	Soil Bioengineering		December 2003
	1350.01	General	
	1350.02	References	
	1350.03	Uses	
	1350.04	Design Responsibilities and Considerations	
	1350.05	Documentation	

Division 14 Right of Way and Access Control

Chapter 1410	Right of Way Considerations		May 2004
	1410.01	General	
	1410.02	References	
	1410.03	Special Features	
	1410.04	Easements and Permits	
	1410.05	Programming for Funds	
	1410.06	Appraisal and Acquisition	
	1410.07	Transactions	
	1410.08	Documentation	
Chapter 1420	Access Control		December 2003
	1420.01	General	
	1420.02	References	
	1420.03	Definitions	
	1420.04	Vocabulary	
Chapter 1425	Access Point Decision Report		May 2000
	1425.01	General	(1425-10 May 2004)
	1425.02	References	
	1425.03	Definitions	
	1425.04	Procedures	
	1425.05	Access Point Decision Report and Supporting Analyses	
	1425.06	Documentation	
Chapter 1430	Limited Access		December 2003
	1430.01	General	
	1430.02	Achieving Limited Access	
	1430.03	Full Control (Most Restrictive)	
	1430.04	Partial Control	
	1430.05	Modified Control (Least Restrictive)	
	1430.06	Access Approaches	
	1430.07	Frontage Roads	
	1430.08	Turnbacks	
	1430.09	Adjacent Railroads	
	1430.10	Modifications to Limited Access Highways	
	1430.11	Documentation	

			Date
Chapter 1435	Managed Access		December 2003
	1435.01	General	
	1435.02	Managed Access Classes	
	1435.03	Corner Clearance Criteria	
	1435.04	Access Connection Categories	
	1435.05	Access Connection Permit	
	1435.06	Permit Process	
	1435.07	Design Considerations	
	1435.08	Other Considerations	
	1435.09	Preconstruction Conference	
	1435.10	Adjudicative Proceedings	
	1435.11	Documentation	
Chapter 1440	Surveying and Mapping		June 1999
	1440.01	General	(1440-2 May 2001)
	1440.02	References	
	1440.03	Procedures	
	1440.04	Datums	
	1440.05	Global Positioning System	
	1440.06	WSDOT Monument Database	
	1440.07	Geographic Information System	
	1440.08	Photogrammetric Surveys	
	1440.09	Documentation	
Chapter 1450	Monumentation		May 2001
	1450.01	General	(1450-3 and 4 May 2004)
	1450.02	References	
	1450.03	Definitions	
	1450.04	Control Monuments	
	1450.05	Alignment Monuments	
	1450.06	Property Corners	
	1450.07	Other Monuments	
	1450.08	Documentation	
	1450.09	Filing Requirements	
Chapter 1460	Fencing		December 2003
	1460.01	General	(1460-2 June 2005)
	1460.02	References	
	1460.03	Design Criteria	
	1460.04	Fencing Types	
	1460.05	Gates	
	1460.06	Procedure	
	1460.07	Documentation	

Index June 2005

Figures

Figure Number	Title	Page	Last Date
120-1	Relationship Between Transportation Plans and Planning Organizations	120-15	January 2005
120-2	Transportation Improvement Programs	120-16	January 2005
120-3	Linking Planning and Programming	120-17	January 2005
140-1	Overlapping Disciplines for Successful Project Delivery	140-1	January 2005
140-2	Project Management Trade-Off Triangle	140-2	January 2005
140-3	Relative Effort	140-3	January 2005
140-4	Steps and Elements	140-4	January 2005
140-5	Risk Probability – Impact Matrix	140-9	January 2005
140-6	Using MPD Iteratively	140-16	January 2005
141-1a	Determination of the Roles and Responsibilities for Projects with Structures (Project Development Phase)	141-2	January 2005
141-1b	Determination of the Roles and Responsibilities for Projects with Structures (Project Development Phase)	141-3	January 2005
150-1	Program Elements	150-6	June 2005
150-2	Program Elements	150-7	June 2005
150-2	(Continued) Program Elements	150-8	June 2005
210-1	Sequence for a Hearing	210-16	December 1998
240-1a	Permits and Approvals	240-2	June 2005
240-1b	Permits and Approvals	240-3	June 2005
240-1c	Permits and Approvals	240-4	June 2005
240-1d	Permits and Approvals	240-5	June 2005
240-1e	Permits and Approvals	240-6	June 2005
240-2	Project Environmental Matrix 1 Permit Probabilities for Interstate Routes (Main Line)	240-9	June 2005
240-3	Project Environmental Matrix 2 Permit Probabilitiy for Interstate Interchange Areas	240-10	June 2005
240-4	Project Environmemtal Matrix 3 Permit Probability for NHS Routes Non-Interstate (Main Line)	240-11	June 2005
240-5	Project Environmental Matrix 4 Interchange Areas, NHS (Except Interstate) and Non-NHS	240-12	June 2005
240-6	Project Environmental Matrix 5 Non-NHS Routes (Main Line)	240-13	June 2005
240-7a	Endnotes for Project Environmental Matrices	240-14	June 2005
240-7b	Endnotes for Project Environmental Matrices	240-15	June 2005
240-7c	Endnotes for Project Environmental Matrices	240-16	June 2005
240-8	Environmental Interrelationship: HMA/PCCP/BST Mainline Overlay	240-18	June 2005
240-9	Environmental Interrelationship: Safety Corridor Channelization Main Line	240-19	June 2005
315-1	Eight-Phase Job Plan for VE Studies	315-5	August 1998
315-2	Request for Value Engineering Study	315-6	August 1998
315-3	VE Study Team Tools	315-7	August 1998
325-1	Design Matrix Selection Guide	325-1	January 2005
325-2a	NHS Highways in Washington	325-9	January 2005

Figure Number	Title	Page	Last Date
325-2b	NHS Highways in Washington	325-10	January 2005
325-3	Design Matrix 1 Interstate Routes (Main Line)	325-11	January 2005
325-4	Design Matrix 2 Interstate Interchange Areas	325-12	January 2005
325-5	Design Matrix 3 Main Line NHS Routes (Except Interstate)	325-13	January 2005
325-6	Design Matrix 4 Interchange Areas, NHS (Except Interstate) and Non-NHS	325-14	January 2005
325-7	Design Matrix 5 Main Line Non-NHS Routes	325-15	June 2005
330-1	Design Matrix Documentation Requirements	330-5	December 2003
330-2a	Design Approval Level	330-10	December 2003
330-2b	Design Approval Level	330-11	December 2003
330-3a	Approvals	330-12	December 2003
330-3b	Approvals	330-13	December 2003
330-4	PS&E Process Approvals	330-14	December 2003
330-5	Common Components of Design Documentation Package	330-15	December 2003
330-6	Deviation and Evaluate Upgrade Request/Documentation Content List	330-16	December 2003
340-1	Minor Operational Enhancement Matrix Selection Guide	340-4	June 2005
340-2	Minor Operational Enhancement Matrix 1 Interstate & NHS Freeway Routes	340-8	June 2005
340-3	Minor Operational Enhancement Matrix 2 NHS Non-freeway Routes	340-9	June 2005
340-4	Minor Operational Enhancement Matrix 3 Non-NHS Routes	340-10	June 2005
340-5a	Q Project Design Summary/Approval Template	340-11	June 2005
340-5b	Q Project Design Summary/Approval Template (continued)	340-12	June 2005
340-6	Refuge Lane for T-Intersections on 2 Lane Highways	340-13	June 2005
430-1	Turning Ramp Lane Widths Modified Design Level	430-1	January 2005
430-2	Design Vehicles Modified Design Level	430-3	May 2004
430-3	Modified Design Level for Multilane Highways and Bridges (See errata)	430-4	May 2004
430-4	Modified Design Level for Two-Lane Highways and Bridges (See DM Supplement Design Speed Date 3/25/2004)	430-5	May 2001
430-5	Minimum Total Roadway Widths for Two-Lane Highway Curves Modified Design Level	430-6	May 2001
430-6	Minimum Total Roadway Widths for Two-Lane Highway Curves, D<90° Modified Design Level	430-7	May 2001
430-7	Evaluation for Stopping Sight Distance for Crest Vertical Curves Modified Design Level	430-8	May 2001
430-8	Evaluation for Stopping Sight Distance for Horizontal Curves Modified Design Level	430-9	May 2001
430-9	Main Line Roadway Sections Modified Design Level	430-10	February 2002
430-10	Ramp Roadway Sections Modified Design Level	430-11	May 2001
440-1	Desirable Design Speed	440-5	January 2005
440-2	Minimum Shoulder Width	440-6	January 2005
440-3	Shoulder Width for Curbed Sections	440-7	January 2005
440-4	Geometric Design Data, Interstate	440-11	January 2005
440-5a	Geometric Design Data, Principal Arterial	440-12	January 2005

Figure Number	Title	Page	Last Date
440-5b	Geometric Design Data, Principal Arterial	440-13	January 2005
440-6a	Geometric Design Data, Minor Arterial	440-14	January 2005
440-6b	Geometric Design Data, Minor Arterial	440-15	January 2005
440-7a	Geometric Design Data, Collector	440-16	January 2005
440-7b	Geometric Design Data, Collector	440-17	January 2005
440-8	Geometric Design Data, Urban Managed Access Highways	440-18	January 2005
510-1	Material Source Development Plan	510-15	May 2004
520-1	Estimating – Miscellaneous Tables	520-2	January 2005
520-2a	Estimating – Hot Mix Asphalt Pavement and Asphalt Distribution Tables	520-3	January 2005
520-2b	Estimating –Asphalt Distribution Tables	520-4	January 2005
520-3	Estimating – Bituminous Surface Treatment	520-5	January 2005
520-4	Estimating – Base and Surfacing Typical Section Formulae and Example	520-6	January 2005
520-5a	Estimating - Base and Surfacing Quantities	520-7	January 2005
520-5b	Estimating - Base and Surfacing Quantities	520-8	January 2005
520-5c	Estimating - Base and Surfacing Quantities	520-9	January 2005
520-5d	Estimating - Base and Surfacing Quantities	520-10	January 2005
520-5e	Estimating - Base and Surfacing Quantities	520-11	January 2005
520-5f	Estimating - Base and Surfacing Quantities	520-12	January 2005
520-5g	Estimating - Base and Surfacing Quantities	520-13	January 2005
520-5h	Estimating - Base and Surfacing Quantities	520-14	January 2005
530-1	Selection Criteria for Geotextile Class	530-3	April 1998
530-2	Maximum Sheet Flow Lengths for Silt Fences	530-8	April 1998
530-3	Maximum Contributing Area for Ditch and Swale Applications	530-8	April 1998
530-4	Design Process for Drainage and Erosion Control Geotextiles and Nonstandard Applications	530-12	May 2004
530-5	Design Process for Separation, Soil Stabilization, and Silt Fence	530-13	May 2004
530-6a	Examples of Various Geosynthetics	530-14	April 1998
530-6b	Examples of Various Geosynthetics	530-15	April 1998
530-7a	Geotextile Application Examples	530-16	April 1998
530-7b	Geotextile Application Examples	530-17	April 1998
530-7c	Geotextile Application Examples	530-18	April 1998
530-7d	Geotextile Application Examples	530-19	April 1998
530-8	Definition of Slope Length	530-20	April 1998
530-9	Definition of Ditch or Swale Storage Length and Width	530-21	April 1998
530-10	Silt Fences for Large Contributing Area	530-22	April 1998
530-11	Silt Fence End Treatment	530-23	April 1998
530-12	Gravel Check Dams for Silt Fences	530-24	April 1998
610-1	Type of Area and Appropriate Level of Service	610-3	June 1989
610-2	Adjustment Factor for Type of Multilane Highway and Development Environment, f_E	610-3	June 1989

Figure Number	Title	Page	Last Date
610-3	Maximum ADT vs. Level of Service and Type of Terrain for Two-Lane Rural Highways	610-4	June 1989
610-4	Service Flow Rate per Lane (SFL) for Multilane Highways	610-5	June 1989
610-5	Peak-Hour Factors	610-6	June 1989
610-6	Service Flow Rates per Lane (SFL) for Freeways	610-6	June 1989
620-1	Maximum Angle Without Curve	620-3	January 2005
620-2a	Alignment Examples	620-6	January 2005
620-2b	Alignment Examples	620-7	May 2004
620-2c	Alignment Examples	620-8	May 2004
630-1	Grade Length	630-3	May 2004
630-2a	Coordination of Horizontal and Vertical Alignments	630-5	May 2004
630-2b	Coordination of Horizontal and Vertical Alignments	630-6	May 2004
630-2c	Coordination of Horizontal and Vertical Alignments	630-7	May 2004
630-3	Grading at Railroad Crossings	630-8	May 2004
640-1	Divided Highway Roadway Sections	640-7	January 2005
640-2	Undivided Multilane Highway Roadway Sections	640-8	January 2005
640-3	Two-Lane Highway Roadway Sections	640-9	January 2005
640-4a	Ramp Roadway Sections	640-10	January 2005
640-4b	Ramp Roadway Sections	640-11	January 2005
640-5a	Shoulder Details	640-12	January 2005
640-5b	Shoulder Details	640-13	January 2005
640-6a	Divided Highway Median Sections	640-14	June 2005
640-6b	Divided Highway Median Sections	640-15	January 2005
640-6c	Divided Highway Median Sections	640-16	January 2005
640-7a	Roadway Sections in Rock Cuts, Design A	640-17	January 2005
640-7b	Roadway Sections in Rock Cuts, Design B	640-18	January 2005
640-8	Roadway Sections With Stepped Slopes	640-19	January 2005
640-9a	Bridge End Slopes	640-20	January 2005
640-9b	Bridge End Slopes	640-21	January 2005
641-1a	Traveled Way Width for Two-Lane Two-Way Turning Roadways	641-3	January 2005
641-1b	Traveled Way Width for Two-Lane Two-Way Turning Roadways	641-4	January 2005
641-2a	Traveled Way Width for Two-Lane One-Way Turning Roadways	641-5	January 2005
641-2b	Traveled Way Width for Two-Lane One-Way Turning Roadways	641-6	January 2005
641-3a	Traveled Way Width for One-Lane Turning Roadways	641-7	January 2005
641-3b	Traveled Way Width for One-Lane Turning Roadways	641-8	January 2005
641-3c	Traveled Way Width for One-Lane Turning Roadways	641-9	January 2005
642-1	Minimum Radius for Normal Crown Section	642-2	January 2005
642-2	Side Friction Factor	642-3	January 2005
642-3a	Superelevation Rates (10% max)	642-5	January 2005
642-3b	Superelevation Rates (6% max)	642-6	January 2005
642-3c	Superelevation Rates (8% max)	642-7	January 2005
642-4	Superelevation Rates for Low-Speed Urban Managed Access Highways	642-8	January 2005
642-5a	Superelevation Transitions for Highway Curves	642-9	January 2005

Figure Number	Title	Page	Last Date
642-5b	Superelevation Transitions for Highway Curves	642-10	January 2005
642-5c	Superelevation Transitions for Highway Curves	642-11	January 2005
642-5d	Superelevation Transitions for Highway Curves	642-12	January 2005
642-5e	Superelevation Transitions for Highway Curves	642-13	January 2005
642-6a	Superelevation Transitions for Ramp Curves	642-14	January 2005
642-6b	Superelevation Transitions for Ramp Curves	642-15	January 2005
650-1	Passing Sight Distance	650-1	April 1998
650-2	Design Stopping Sight Distance (See DM Supplement Stopping Sight Distance dated October 9, 2002)	650-3	June 1999
650-3	Existing Stopping Sight Distance (See DM Supplement Stopping Sight Distance dated October 9, 2002)	650-3	June 1999
650-4	Design Stopping Sight Distance on Grades (See DM Supplement Stopping Sight Distance dated October 9, 2002)	650-3	June 1999
650-5	Decision Sight Distance (See DM Supplement Stopping Sight Distance dated October 9, 2002)	650-5	April 1998
650-6	Passing Sight Distance for Crest Vertical Curves	650-6	April 1998
650-7	Stopping Sight Distance for Crest Vertical Curves	650-7	April 1998
650-8	Stopping Sight Distance for Sag Vertical Curves	650-8	May 2000
650-9	Horizontal Stopping Sight Distance	650-9	May 2001
700-1	Design Clear Zone Distance Table	700-10	May 2003
700-2a	Design Clear Zone Inventory Form	700-11	May 2003
700-2b	Design Clear Zone Inventory Form	700-12	May 2003
700-3	Recovery Area	700-13	May 2003
700-4	Design Clear Zone for Ditch Sections	700-14	May 2003
700-5	Guidelines for Embankment Barrier	700-15	May 2003
700-6	Mailbox Location and Turnout Design	700-16	May 2003
700-7	Glare Screens	700-17	May 2003
710-1	Type 7 Bridge Rail Upgrade Criteria	710-4	January 2005
710-2	Longitudinal Barrier Deflection	710-5	January 2005
710-3	Longitudinal Barrier Flare Rates	710-6	January 2005
710-4	Traffic Barrier Locations on Slopes	710-8	January 2005
710-5	Old Type 3 Anchor	710-11	January 2005
710-6	Guardrail Connections	710-12	January 2005
710-7	Concrete Barrier Shapes	710-14	January 2005
710-8	Concrete Barrier Placement Guidance (Assessing Impacts to Wildlife)	710-17	January 2005
710-9	Safety Shaped Concrete Bridge Rail Retrofit	710-19	January 2005
710-10	Transitions and Connections	710-20	January 2005
710-11a	Barrier Length of Need	710-21	January 2005
710-11b	Barrier Length of Need	710-22	January 2005
710-11c	Barrier Length of Need on Curves	710-23	January 2005
710-11d	W-Beam Guardrail Trailing End Placement for Divided Highways	710-24	January 2005

Figure Number	Title	Page	Last Date
710-12	Beam Guardrail Post Installation	710-25	January 2005
710-13	Beam Guardrail Terminals	710-26	January 2005
710-14	Cable Barrier Locations on Slopes	710-27	January 2005
710-15	Thrie Beam Rail Retrofit Criteria	710-28	January 2005
720-1	Impact Attenuator Sizes	720-6	January 2005
720-2a	Impact Attenuator Systems — Permanent Installations	720-8	January 2005
720-2b	Impact Attenuator Systems — Permanent Installations	720-9	January 2005
720-2c	Impact Attenuator Systems — Permanent Installations	720-10	January 2005
720-2d	Impact Attenuator Systems — Permanent Installations	720-11	January 2005
720-2e	Impact Attenuator Systems — Permanent Installations	720-12	January 2005
720-3	Impact Attenuator Systems — Work Zone Installations	720-13	January 2005
720-4a	Impact Attenuator Systems — Older Systems	720-14	January 2005
720-4b	Impact Attenuator Systems — Older Systems	720-15	January 2005
720-5	Impact Attenuator Comparison	720-16	January 2005
810-1a	Work Zone Types	810-13	December 2003
810-1b	Work Zone Types	810-14	December 2003
810-1c	Work Zone Types	810-15	December 2003
810-2a	Sign Placement — Rural Areas	810-16	December 2003
810-2b	Sign Placement — Urban Areas	810-17	December 2003
810-3	Channelization Devices	810-18	December 2003
810-4	Barricade Types	810-19	December 2003
810-5	Barrier Delineators	810-20	December 2003
820-1a	Sign Support Locations	820-5	November 1999
820-1b	Sign Support Locations	820-6	November 1999
820-2	Wood Posts	820-7	November 1999
820-3	Steel Posts	820-8	November 1999
820-4	Laminated Wood Box Posts	820-9	November 1999
830-1	Pavement Marking Material Guide	830-6	January 2005
830-2	Guide Post Placement	830-7	May 2000
830-3	Wildlife Reflectors on a Tangent Section	830-8	May 2000
830-4	Wildlife Reflectors on the Outside of a Curve	830-8	May 2000
840-1	Freeway Lighting Applications	840-9	December 2003
840-2	Freeway Lighting Applications	840-10	December 2003
840-3	Roadway Lighting Applications	840-11	December 2003
840-4	Roadway Lighting Applications	840-12	December 2003
840-5	Roadway Lighting Applications	840-13	December 2003
840-6	Light Levels and Uniformity Ratios	840-14	December 2003
840-7	Light Standard Locations	840-15	May 2004
840-8	Luminaire Wattage, Lumens, and Mounting Heights	840-16	May 2004
850-1	Signal Display Maximum Heights	850-13	May 2001
850-2	Signal Display Areas	850-14	May 2001
850-3	Responsibility for Facilities	850-17	May 2001
850-4	Standard Intersection Movements and Head Numbers	850-18	May 2001
850-5	Phase Diagrams-Four Way Intersections	850-19	May 2001
850-6	Turn Lane Configuration Preventing Concurrent Phasing Double Left Turn Channelization	850-20	May 2001
850-7	Railroad Preemption Phasing	850-21	May 2001

Figure Number	Title	Page	Last Date
850-8a	Pedestrian Push Button Locations	850-22	May 2001
850-8b	Pedestrian Push Button Locations	850-23	May 2001
850-9	Dilemma Zone Loop Placement	850-24	May 2001
850-10	Railroad Queue Clearance	850-25	May 2001
850-11a	Intersections With Railroad Crossings	850-26	May 2001
850-11b	Intersections With Railroad Crossings	850-27	May 2001
850-12a	Traffic Signal Display Placements	850-28	May 2001
850-12b	Traffic Signal Display Placements	850-29	May 2001
850-12c	Traffic Signal Display Placements	850-30	May 2001
850-12d	Traffic Signal Display Placements	850-31	May 2001
850-12e	Traffic Signal Display Placements	850-32	May 2001
850-13	Mast Arm Signal Moment and Foundation Depths	850-33	May 2001
850-14a	Strain Pole and Foundation Selection Procedure	850-34	May 2001
850-14b	Strain Pole and Foundation Selection Procedure	850-35	May 2001
850-15	Strain Pole and Foundation Selection Example	850-36	May 2001
850-16	Conduit and Conductor Sizes	850-37	May 2001
910-1	Intersection Area	910-2	January 2005
910-2	Design Vehicle Types	910-4	January 2005
910-3	Intersection Design Vehicle	910-5	January 2005
910-4	Left-Turn Storage With Trucks (ft)	910-6	January 2005
910-5	U-Turn Spacing	910-11	January 2005
910-6a	Turning Path Template	910-15	January 2005
910-6b	Turning Path Template	910-16	January 2005
910-6c	Turning Path Template	910-17	January 2005
910-7	Right-Turn Corner	910-18	January 2005
910-8a	Left-Turn Storage Guidelines (Two-Lane, Unsignalized)	910-19	January 2005
910-8b	Left-Turn Storage Guidelines (Four-Lane, Unsignalized)	910-20	January 2005
910-9a	Left-Turn Storage Length (Two-Lane, Unsignalized)	910-21	January 2005
910-9b	Left-Turn Storage Length (Two-Lane, Unsignalized)	910-22	January 2005
910-9c	Left-Turn Storage Length (Two-Lane, Unsignalized)	910-23	January 2005
910-10a	Median Channelization (Widening)	910-24	January 2005
910-10b	Median Channelization (Median Width 11 ft or more)	910-25	January 2005
910-10c	Median Channelization (Median Width 23 ft to 26 ft)	910-26	January 2005
910-10d	Median Channelization (Median Width of More Than 26 ft)	910-27	January 2005
910-10e	Median Channelization (Minimum Protected Storage)	910-28	January 2005
910-10f	Median Channelization (Two-way Left-Turn Lane)	910-29	January 2005
910-11	Right-Turn Lane Guidelines	910-30	January 2005
910-12	Right-Turn Pocket and Right-Turn Taper	910-31	January 2005
910-13	Right-Turn Lane	910-32	January 2005
910-14	Acceleration Lane	910-33	January 2005
910-15a	Traffic Island Designs	910-34	January 2005
910-15b	Traffic Island Designs (Compound Curve)	910-35	January 2005
910-15c	Traffic Island Designs	910-36	January 2005
910-16	U-Turn Locations	910-37	January 2005
910-17a	Sight Distance at Intersections	910-38	January 2005
910-17b	Sight Distance at Intersections	910-39	January 2005
910-18	Interchange Ramp Details	910-40	January 2005

Figure Number	Title	Page	Last Date
915-1	Roundabout Elements	915-3	May 2004
915-2	Entry Angle	915-4	May 2004
915-3	Turning Radius (R)	915-5	May 2004
915-4	Approach Leg Alignment	915-8	January 2005
915-5	Deflection	915-9	January 2005
915-6	Stopping Sight Distance for Roundabouts	915-11	May 2004
915-7	Roundabout Categories Design Characteristics	915-17	January 2005
915-8	Approximate Entry Capacity	915-18	January 2005
915-9a	Deflection Path	915-19	May 2004
915-9b	Deflection Path	915-20	May 2004
915-10	Deflection Path Radius	915-21	May 2004
915-11	Entry and Exit	915-22	January 2005
915-12	Path Overlap	915-23	May 2004
915-13	Roundabout Intersection Sight Distance	915-24	May 2004
915-14	Central Island	915-25	May 2004
915-15	Splitter Island	915-26	May 2004
915-16	Shared Use Sidewalk	915-27	May 2004
915-17	Roundabout Signing	915-28	May 2004
915-18	Roundabout Illumination	915-29	May 2004
920-1	Road Approach Design Templates	920-2	December 2003
920-2	Road Approach Access Category	920-2	December 2003
920-3	Road Approach Design Template A1	920-5	December 2003
920-4	Road Approach Design Templates B1 and C1	920-6	December 2003
920-5	Road Approach Design Template D1	920-7	December 2003
920-6	Road Approach Sight Distance	920-8	December 2003
930-1	Sight Distance at Railroad Crossing	930-3	January 2005
930-2	Sight Distance at Railroad Crossing	930-3	January 2005
930-3	Typical Pullout Lane at Railroad Crossing	930-5	January 2005
940-1	Ramp Design Speed	940-5	January 2005
940-2	Maximum Ramp Grade	940-5	January 2005
940-3	Ramp Widths (ft)	940-5	January 2005
940-4	Basic Interchange Patterns	940-12	September 2002
940-5	Minimum Ramp Connection Spacing	940-13	September 2002
940-6a	Lane Balance	940-14	September 2002
940-6b	Lane Balance	940-15	September 2002
940-7	Main Line Lane Reduction Alternatives	940-16	September 2002
940-8	Acceleration Lane Length	940-17	September 2002
940-9a	On-Connection (Single-Lane, Taper Type)	940-18	September 2002
940-9b	On-Connection (Single-Lane, Parallel Type)	940-19	September 2002
940-9c	On-Connection (Two-Lane, Parallel Type)	940-20	September 2002
940-9d	On-Connection (Two-Lane, Taper Type)	940-21	September 2002
940-10	Deceleration Lane Length	940-22	September 2002
940-11a	Gore Area Characteristics	940-23	January 2005
940-11b	Gore Area Characteristics	940-24	January 2005
940-12a	Off-Connection (Single-Lane, Taper Type)	940-25	September 2002
940-12b	Off-Connection (Single-Lane, Parallel Type)	940-26	September 2002
940-12c	Off-Connection (Single-Lane, One-Lane Reduction)	940-27	September 2002
940-12d	Off-Connection (Two-Lane, Taper Type)	940-28	January 2005

Figure Number	Title	Page	Last Date
940-12e	Off-Connection (Two-Lane, Parallel Type)	940-29	September 2002
940-13a	Collector Distributor (Outer Separations)	940-30	September 2002
940-13b	Collector Distributor (Off-Connections)	940-31	September 2002
940-13c	Collector Distributor (On-Connections)	940-32	September 2002
940-14	Loop Ramps Connections	940-33	September 2002
940-15	Length of Weaving Sections	940-34	September 2002
940-16	Temporary Ramps	940-35	September 2002
940-17	Interchange Plan	940-36	September 2002
1010-1	Rolling Resistance	1010-4	November 1999
1010-2a	Performance for Heavy Trucks	1010-6	May 2004
1010-2b	Speed Reduction Example	1010-7	November 1999
1010-3	Level of Service — Multilane	1010-8	May 2001
1010-4	Auxiliary Climbing Lane	1010-9	November 1999
1010-5	Warrant for Passing Lanes	1010-10	November 1999
1010-6	Auxiliary Passing Lane	1010-11	November 1999
1010-7	Slow Moving Vehicle Turnout	1010-12	November 1999
1010-8	Typical Emergency Escape Ramp	1010-13	November 1999
1010-9	Chain-Up/Chain-Off Area	1010-14	November 1999
1020-1	Shared Use Path	1020-3	May 2001
1020-2	Bike Lane	1020-4	May 2001
1020-3	Shared Roadway	1020-4	May 2001
1020-4	Signed Shared Roadway (Designated Bike Route)	1020-5	May 2001
1020-5	Obstruction Marking	1020-8	May 2001
1020-6	Midblock Type Shared Use Path Crossing	1020-9	May 2001
1020-7	Typical Redesign of a Diagonal Midblock Crossing	1020-10	May 2001
1020-8	Adjacent Shared Use Path Intersection	1020-11	May 2001
1020-9	Railroad Crossing for Shared Used Path	1020-12	May 2001
1020-10	Bicycle Design Speeds	1020-13	May 2001
1020-11	Bikeway Curve Widening	1020-13	May 2001
1020-12	R Values and Subsurfacing Needs	1020-14	May 2001
1020-13	Two-Way Shared Use Path on Separate Right of Way	1020-18	May 2001
1020-14	Two-Way Shared Use Path Adjacent to Roadway	1020-19	May 2001
1020-15	Typical Bike Lane Cross Sections	1020-20	May 2001
1020-16	Bikeways on Highway Bridges	1020-21	May 2001
1020-17	Refuge Area	1020-22	May 2001
1020-18	At-Grade Railroad Crossings	1020-23	May 2001
1020-19	Stopping Sight Distance	1020-24	May 2001
1020-20	Sight Distance for Crest Vertical Curves	1020-25	September 2002
1020-21	Lateral Clearance on Horizontal Curves	1020-26	September 2002
1020-22	Typical Bicycle/Auto Movements at Intersection of Multilane Streets	1020-27	May 2001
1020-23a	Bicycle Crossing of Interchange Ramp	1020-28	May 2001
1020-23b	Bicycle Crossing of Interchange Ramp	1020-29	May 2001
1020-24	Bike Lanes Approaching Motorists' Right-Turn-Only Lanes	1020-30	May 2001
1020-25	Typical Pavement Marking for Bike Lane on Two-Way Street	1020-31	May 2001
1020-26	Typical Bike Lane Pavement Markings at T-Intersections	1020-32	May 2001

Figure Number	Title	Page	Last Date
1025-1	Trail Width and Grades	1025-5	May 2001
1025-2a	Pedestrian Walkways	1025-10	May 2004
1025-2b	Pedestrian Walkways	1025-11	May 2004
1025-3	Sidewalk Recommendations	1025-12	May 2001
1025-4	Marked Crosswalk Recommendations at Unsignalized Pedestrian Crossings	1025-13	May 2001
1025-5	Crosswalk Locations	1025-14	May 2001
1025-6a	Sight Distance at Intersections	1025-15	May 2001
1025-6b	Sight Distance at Intersections	1025-16	May 2001
1025-7	Sidewalk Bulb Outs	1025-17	May 2001
1025-8	Midblock Pedestrian Crossing	1025-18	May 2001
1025-9	Sidewalk Ramp Drainage	1025-19	May 2001
1030-1	Typical Truck Storage	1030-2	December 2003
1030-2	Typical Single RV Dump Station Layout	1030-3	December 2003
1030-3	Typical Two RV Dump Station Layout	1030-4	December 2003
1040-1	Truck Weigh Site (Multilane Highways)	1040-6	May 2004
1040-2	Truck Weigh Site (Two Lane Highways)	1040-7	May 2000
1040-3	Vehicle Inspection Installation	1040-8	May 2000
1040-4	Minor Portable Scale Site	1040-9	May 2000
1040-5	Major Portable Scale Site	1040-10	May 2000
1040-6	Small Shoulder Site	1040-11	May 2000
1040-7	Large Shoulder Site	1040-12	May 2000
1040-8a	MOU Related to Vehicle Weighing and Equipment Inspection Facilities on State Highways	1040-13	May 2000
1040-8b	MOU Related to Vehicle Weighing and Equipment Inspection Facilities on State Highways	1040-14	May 2000
1040-8c	MOU Related to Vehicle Weighing and Equipment Inspection Facilities on State Highways	1040-15	May 2000
1040-8d	MOU Related to Vehicle Weighing and Equipment Inspection Facilities on State Highways	1040-16	May 2000
1040-8e	MOU Related to Vehicle Weighing and Equipment Inspection Facilities on State Highways	1040-17	May 2000
1050-1	Minimum Traveled Way Widths for Articulated Buses	1050-8	May 2003
1050-2	Typical HOV Lane Sections	1050-11	May 2003
1050-3	Roadway Widths for Two-Lane Ramps with an HOV Lane	1050-12	January 2005
1050-4a	Single-Lane Ramp Meter With HOV Bypass	1050-13	January 2005
1050-4b	Two-Lane Ramp Meter With HOV Bypass	1050-14	January 2005
1050-5a	Enforcement Area (One Direction Only)	1050-15	May 2003
1050-5b	Enforcement Area (Median)	1050-16	May 2003
1055-1	Minimum Ramp Widths for Articulated Buses	1055-6	June 2005
1055-2	Gap Acceptance Length for Parallel On-Connections	1055-7	June 2005
1055-3	Drop Ramp	1055-11	June 2005
1055-4	T Ramp	1055-12	June 2005
1055-5	Flyover Ramp	1055-13	June 2005
1055-6	Side Platform Flyer Stop	1055-14	June 2005
1055-7	At-Grade Crossing Flyer Stop	1055-15	June 2005
1055-8	Transit Stops at Ramps	1055-16	June 2005
1055-9	Other Transit Stops	1055-17	June 2005

Figure Number	Title	Page	Last Date
1055-10	Single Lane Parallel On-Connection	1055-18	June 2005
1055-11	HOV Direct Access Acceleration Lane Length	1055-19	June 2005
1055-12	Single Lane Parallel Off-Connection	1055-20	June 2005
1055-13	Drop Ramp Gore Area Characteristics	1055-21	June 2005
1055-14	Deceleration Lane Length for Buses	1055-22	June 2005
1055-15	T Ramp Design	1055-23	June 2005
1055-16	Flyer Stop Signing	1055-24	June 2005
1055-17a	HOV Direct Access Signing	1055-25	June 2005
1055-17b	HOV Direct Access Signing	1055-26	June 2005
1060-1 M	Bus Berth Designs	1060-14	March 1994
1060-2	Transit Center Sawtooth Bus Berth Design Example	1060-15	December 1991
1060-3 M	Bus Turnout Transfer Center	1060-16	March 1994
1060-4 M	Off-Street Transfer Center	1060-17	March 1994
1060-5 M	Minimum Bus Zone Dimensions	1060-18	March 1994
1060-6 M	Bus Stop Pullouts, Arterial Streets	1060-19	May 2004
1060-7 M	Minimum Bus Zone and Pullout after Right Turn Dimensions	1060-20	March 1994
1060-8 M	Shelter Siting	1060-21	March 1994
1060-9 M	Typical Bus Shelter Design	1060-22	March 1994
1060-10 M	Design Vehicle Turning Movements	1060-23	July 1994
1060-11 M	Turning Template for Articulated Bus	1060-24	July 1994
1060-12 M	Intersection Design	1060-25	March 1994
1060-13 M	Cross-Street Width Occupied by Turning Vehicle for Various Angles of Intersection and Curb Radii	1060-26	March 1994
1060-1	Bus Berth Designs	1060-27	March 1994
1060-3	Bus Turnout Transfer Center	1060-28	March 1994
1060-4	Off-Street Transfer Center	1060-29	March 1994
1060-5	Minimum Bus Zone Dimensions	1060-30	March 1994
1060-6	Bus Stop Pullouts, Arterial Streets	1060-31	March 1994
1060-7	Minimum Bus Zone and Pullout after Right Turn Dimensions	1060-32	March 1994
1060-8	Shelter Siting	1060-33	March 1994
1060-9	Typical Bus Shelter Design	1060-34	March 1994
1060-10	Design Vehicle Turning Movements	1060-35	July 1994
1060-11	Turning Template for Articulated Bus	1060-36	July 1994
1060-12	Intersection Design	1060-37	March 1994
1060-13	Cross-Street Width Occupied by Turning Vehicle for Various Angles of Intersection and Curb Radii	1060-38	March 1994
1110-1	Bridge Site Data Check List	1110-5	December 2003
1120-1	Bridge Vertical Clearances	1120-4	January 2005
1120-2a	Railroad Vertical Clearance for New Bridge Construction	1120-6	January 2005
1120-2b	Railroad Vertical Clearance for Existing Bridge Modifications	1120-7	January 2005
1120-3	Embankment Slope at Bridge Ends	1120-8	January 2005
1130-1a	Typical Mechanically Stabilized Earth Gravity Walls	1130-22	December 1998
1130-1b	Typical Prefabricated Modular Gravity Walls	1130-23	December 1998
1130-1c	Typical Rigid Gravity, Semigravity Cantilever, Nongravity Cantilever, and Anchored Walls	1130-24	May 2003

Figure Number	Title	Page	Last Date
1130-1d	Typical Rockery and Reinforced Slope	1130-25	May 2003
1130-2	MSE Wall Drainage Detail	1130-26	May 2003
1130-3	Retaining Walls With Traffic Barriers	1130-27	May 2003
1130-4a	Retaining Wall Design Process	1130-28	May 2003
1130-4b	Retaining Wall Design Process — Proprietary	1130-29	May 2003
1130-5	Retaining Wall Bearing Pressure	1130-30	December 1998
1140-1	Standard Noise Wall Types	1140-3	May 2003
1300-1	Funding Source Determines Extent of Restoration	1300-1	January 2005
1350-1	Soil Bioengineering Design	1350-3	December 2003
1410-1	Appraisal and Acquisition	1410-6	May 2004
1420-1	Access Vocabulary	1420-6	December 2003
1425-1a	Access Point Decision Report Content and Review Levels	1425-11	May 2000
1425-1b	Access Point Decision Report Content and Review Levels	1425-12	May 2000
1425-2	Access Point Decision Report Possibly Not Required	1425-13	May 2000
1425-3a	Access Point Decision Report Flow Chart	1425-14	May 2000
1425-3b	Access Point Decision Report Flow Chart	1425-15	May 2000
1430-1a	Full Access Control Limits - Interchange	1430-15	December 2003
1430-1b	Full Access Control Limits - Interchange	1430-16	December 2003
1430-1c	Full Access Control Limits - Interchange	1430-17	December 2003
1430-2	Full Access Control Limits - Ramp Terminal With Transition Taper	1430-18	December 2003
1430-3	Full Access Control Limits - Single Point Urban Interchange	1430-19	December 2003
1430-4	Partial Access Control Limits - At-Grade Intersections	1430-20	December 2003
1430-5	Partial and Modified Access Control Limits - Roundabout Intersections	1430-21	December 2003
1430-6	Modified Access Control Limits - Intersections	1430-22	December 2003
1435-1	Minimum Corner Clearance	1435-6	December 2003
1435-2	Minimum Corner Clearance: Distance From Access Connection to Intersections	1435-7	December 2003
1435-3	Managed Access Highway Class Description	1435-14	December 2003
1440-1a	Interagency Agreement	1440-4	June 1999
1440-1b	Interagency Agreement	1440-5	June 1999
1450-1	Monument Documentation Summary	1450-4	May 2004
1450-2a	DNR Permit Application	1450-5	May 2001
1450-2b	DNR Completion Record Form	1450-6	May 2001
1450-3a	Land Corner Record	1450-7	May 2001
1450-3b	Land Corner Record	1450-8	May 2001

Chapter 100 Manual Description

100.01 Purpose
100.02 Presentation and Revisions
100.03 *Design Manual* Applications
100.04 How the *Design Manual* is to be Used
100.05 The Project Development Process
100.06 How the *Design Manual* is Organized

100.01 Purpose

The Washington State Department of Transportation (WSDOT) has developed the *Design Manual* to reflect policy, outline a uniformity of methods and procedures, and communicate vital information to its employees and others who develop projects on state highways. When properly used, it will facilitate the development of a highway system consistent with the needs of the traveling public. WSDOT designers are required to comply with the *Design Manual*. The Federal Highway Administration (FHWA) has agreed to approve designs that follow guidance in the *Design Manual*; adherence to the guidance presented, therefore, is not optional for state highway projects.

The information, guidance, and references contained herein are not intended as a substitute for sound engineering judgement. It is recognized that some situations encountered are beyond the scope of this presentation, as the *Design Manual* is not a comprehensive textbook on highway engineering. Nor does it attempt to cover all the possible scenarios that Washington's highways present.

For design questions beyond the scope of the *Design Manual*, contact the Headquarters (HQ) Design Office.

100.02 Presentation and Revisions

The *Design Manual* is available in an up-to-date format on the Internet. It can be accessed through the WSDOT home page, the Design Policy and Standards home page, or the Engineering Publications Online Library home page. Opening the manual on the Internet can take considerable time. However, it provides the ability to conduct a word search of the whole manual. Opening an individual chapter is faster, but a word search is limited to that chapter.

The *Design Manual* is also available on "Engineering Publications CD Library" (a CD-ROM). The CD is up-to-date as of the date of production. Hard-copy editions are available on a department cost-recovery basis (free to WSDOT employees).

The *Design Manual* is continually revised to reflect changing processes, procedures, regulations, and organizations. Feedback from users is encouraged to improve the manual for everyone. For example, material that is unclear to one user will most likely be unclear to others.

Engineering Publications maintains a list of people interested in receiving e-mail notification when a revision is being distributed. Comments may be submitted by any method that is convenient for the user. There is a Comment Form in the manual, telephone numbers for the authors are available through the Design Policy and Standards home page, and the manual has its own e-mail address.

A Contents section is provided at the front of the *Design Manual* that lists all chapters, their major headings, and the last revision dates on the pages. There is also a list of all figures, with their page numbers and dates. The dates are provided to aid in determining whether a manual or page is up-to-date. By comparing a printed book or CD file to the manual on the Internet, the date in the footer of the Contents pages will indicate whether the latest revision is in place.

The *Design Manual* is divided into general divisions that contain specialized chapters and an index at the back of the manual.

Each chapter provides a list of the references that are the basis for the information in the chapter, including laws, administrative codes, manuals, and other publications. Each chapter provides definitions for the specialized vocabulary used in the chapter, particularly when a word or phrase has more than one dictionary meaning.

The index lists all significant chapter subheadings, other items selected by the chapters' authors and contributors, and many items suggested by users. Suggestions are helpful because one user's search might help other users later.

100.03 *Design Manual* Applications

The *Design Manual* guidance is provided to encourage uniform application of design details under normal conditions throughout the state. It also guides designers through the project development process used by WSDOT. The *Design Manual* is used by the department: to interpret current design principles, including American Association of State Highway and Transportation Officials (AASHTO) policy and federal and state laws; to develop projects to meet driver expectations; and to balance the benefits and costs of highway construction projects. This manual is designed to allow for flexibility in design for specific and unusual situations. For unusual circumstances, the *Design Manual* provides mechanisms for documenting the reasons for the choices made.

The *Design Manual* supplements engineering analysis and judgment; it is not intended as an engineering textbook. The manual is developed for use on state highways and it may not be suitable for projects on county roads or city streets.

100.04 How the *Design Manual* is to be Used

The WSDOT *Design Manual* is intended to be used for design of department-owned facilities, especially the transportation facilities associated with state highways as designated by the Revised Code of Washington (RCW) 47.17.

For state highway routes, all projects must be designed using the geometric control criteria (see Chapter 325 and Division Four) in the *Design Manual*. If WSDOT guidance is not used on a project, appropriate documentation and approvals are required. (See Chapters 325 and 330).

When WSDOT designs facilities to be turned over to local jurisdictions, those facilities are to be designed using appropriate local geometric design criteria.

When local jurisdictions design any element of state highway facilities, this manual must be used. Local jurisdictions are free to adopt this manual for their local criteria or to develop their own specialized guidance for facilities not on state highway routes.

100.05 The Project Development Process

The *Design Manual* addresses the project development process from programming through the Design Approval. The *Design Manual* is a comprehensive guide to the design of transportation projects; however, the full extent of project development is beyond the scope of the *Design Manual*. The following paragraphs provide a brief summary to assist the designer in understanding the relationship between planning, programming, and design at WSDOT.

Project development is a multi-disciplinary effort that develops the needs identified in the *Washington State Highway System Plan* (HSP) and subsequent planning studies in sufficient detail to produce a set of contract documents. This process bridges the gap from project concept to project construction. The project definition documents provide the framework for further development of the project scope, schedule and estimate, and record key decisions made early in the project development process. Final project design decisions are archived in the Design Decision Package (DDP). The contract documents provide sufficient detail to enable contractors to construct the project.

A global understanding of the overall project development process is important in order to eliminate corrective modifications or rework in the later stages of project implementation. Project modifications and rework are not only costly, they also impact delivery commitments made to the Legislature and the public. Integrating planning, program management, and project delivery are vital to efficient and successful delivery of transportation projects. These projects must have information and processes that flow seamlessly between the planning and the implementation phases of a project. A level of analysis guideline (a series of questions addressed to the design engineer) has been developed to address common

areas where a lack of information has caused significant changes late in the design process. (See the web site: http://wwwi.wsdot.wa.gov/ppsc/pgmmgt/scoping/LevelAnalysis.pdf)

The HSP is the modal element of the *Washington Transportation Plan* (WTP) that addresses the state's highway system. The HSP, managed by the WSDOT HQ Systems Analysis and Program Development Office, includes a comprehensive assessment of existing and projected 20-year needs on the Washington State highway system. Freight, mobility, safety, bicycle, and pedestrian issues are among the 20-year needs. The HSP also lists potential solutions addressing these needs.

The HSP identifies four major programs that are used to manage the state-owned transportation system. These are:

- Maintenance Program (M)
- Operations Program (Q)
- Preservation Program (P)
- Improvement Program (I)

HQ Systems Analysis and Program Development staff begins programming the Preservation and Improvement programs for the highway construction program by sending out to the WSDOT regions the list of needs for each action strategy identified in the department's *Highway System Plan*. Each region takes the lists of needs and performs an engineering analysis on each need, in order, based on the programming instructions. They must develop a project alternative(s) consistent with the department's design matrices, estimate the cost to accomplish that work, and determine the resulting benefits (what performance change can be achieved).

Based on the resulting benefit to cost ratio (b/c), the projects are prioritized based on the highest to lowest ratio for each system plan strategy. Following this step, HQ Program Development develops different budget scenarios for the available investment dollars for the next 2- to 6-year period.

WSDOT has a responsibility to develop a 6-year highway construction program based on projected revenues (RCW 47.05 - Priority programming for highway development). This effort begins by using the Project Summary process to develop an accurate scope, accurate schedule, and accurate budget. Included in the Project Summary are:

- A project definition
- An Environmental Review Summary/ Environmental Classification Summary
- A cost estimate
- A Design Decision Summary, when required for the project type

In addition, WSDOT develops a 10-year Capital Improvement and Preservation Program (CIPP) that includes a listing, cost estimate, and brief description of every capital improvement project in progress or to be in progress over the next 10-years. The CIPP is adopted by the Transportation Commission and submitted to the Governor and, ultimately, by the Governor to the Legislature. The CIPP is updated each biennium.

Program development staff in the regions work closely with region project development staff to identify projects where preliminary engineering funds are available to develop the contract documents. As these funds become available, the Project Development Engineers are notified, and a Project Engineer is identified to lead the project development process. At this point, the Project Engineer assembles a design team and goes to work on development of the project documents.

Design teams are encouraged to use the Managing Project Delivery (MPD) process to map out the direction and the expectations for the project. The MPD process focuses on planning the work and executing the plan. (See Chapter 140.)

The planning study recommendations are used to develop the Project Definition. Following the project definition and required hearings or public involvement, a set of Plans, Specifications and Estimates (PS&E) is completed and used to advertise the project for construction.

The key to maintaining consistency from the planning stage into project construction is to rely on good communication between the planning offices, program management, design engineers, support functions, and the construction office. In general, communication should be thought of as constant and bi-directional. There are always many opportunities throughout the life of a project for these communications to take place.

100.06 How the *Design Manual* is Organized

The *Design Manual* is divided into a series of divisions that address a portion of the project development and design process. The divisions are composed of chapters that address the general topic identified in the division in detail and are, in some cases, specific to a particular discipline.

Division One presents general background on the processes that precede project design. These include planning, managing project delivery, project development, and programming.

- Chapter 100–Manual Description: Informs the designer about content and resources within the *Design Manual*.
- Chapter 120–Planning: Informs the designer about resources that can provide critical information relating to the corridor in which the project resides, such as Corridor Studies and Route Development Plans.
- Chapter 140–Managing Project Delivery: Provides the designer with the resources to build an effective project development work plan.
- Chapter 141–Project Development Roles and Responsibilities for Projects with Structures: Presents the project development process used by WSDOT to determine the roles and responsibilities for projects with structures during the project development phase of a project.
- Chapter 150–Project Development: Describes the Project Development sequence from the *Washington Transportation Plan* (WTP) through the contract document, with emphasis on the Project Summary and Change Management process.

Division Two provides the designer with information about the public involvement and hearings process, the environmental documentation process, and the permit process.

- Chapter 210–Public Involvement and Hearings: Informs the designer about developing a public involvement plan that meets the specific needs of the project; the ingredients of an effective public involvement plan; and methods for public involvement.
- Chapter 220–Project Environmental Documentation: Provides the designer with elementary background on the environmental documentation process and the many requirements.
- Chapter 240–Permits and Approvals: Explains permits that may be required for highway and bridge projects.

Division Three provides designers with information on value engineering, design matrices, design documentation, and approvals.

- Chapter 315–Value Engineering: A systematic multi-disciplinary process study early in the project design to provide recommendations to improve scope, functional design, constructability, environmental impacts, or project cost. Value Engineering studies are required by federal law for high-cost, complex projects.
- Chapter 325–Design Matrices: Includes five figures that provide consistency across projects according to funding type and highway system. Each design matrix sets forth the level of development for a given type of need, which would be automatically approved by the department and FHWA. Deviating from the matrix requires approval. The Design Matrix figures assist the designer to apply the appropriate design level for the majority of improvement and preservation projects.
- Chapter 330–Design Documentation, Approval, and Process Review: Covers building the Project File (PF), and the Design Documentation Package (DDP). The Project File and Design Documentation Package record the recommendations and decisions that lead to a project by preserving the documents from planning, scoping, programming, and design phases, including permits, approvals, contracts, utility relocation, right of way, advertisement, award, and construction for a project.
- Chapter 340–Minor Operational Enhancement Projects (Q Program): Provides design matrices for low-cost, quick-fix projects that improve the operation of a state highway facility.

Division Four includes project design criteria for basic design, modified design, and full design that are part of the design matrices in Chapter 325.

- Chapter 410–Basic Design Level: Contains the required basic safety work and minor preservation and safety work included in the preservation of pavement structures and pavement service life, while maintaining safe operation of the highway.
- Chapter 430–Modified Design Level: Provides the design guidance that is unique to the Modified Design Level of preserving and improving existing roadway geometrics, safety and operational elements.
- Chapter 440–Full Design Level: Provides guidance for the highest level of highway design, to improve roadway geometrics, safety and operational elements. Full Design Level is used on new and reconstructed highways.

Division Five presents guidance for investigating soils, rock, and surfacing materials, estimating tables, and guidance and criteria for the use of geosynthetics.

- Chapter 510–Investigation of Soils, Rock, and Surfacing Materials: Describes the requirements for qualifying a materials source, geotechnical investigations, and the documentation to be included in the Project File.
- Chapter 520–Design of Pavement Structures: Provides estimating tables for the design of pavement structures.
- Chapter 530–Geosynthetics: Introduces the types and applications of geosynthetic drainage, earthwork, erosion control, and soil reinforcement materials.

Division Six covers an introduction to highway capacity; geometric plan elements; horizontal alignment; lane configurations and pavement transitions; geometric profile elements; vertical alignment; geometric cross sections; and sight distance.

- Chapter 610–Highway Capacity: Provides the designer with a basic and limited introduction to highway capacity.
- Chapter 620–Geometric Plan Elements: Provides guidance on the design of horizontal alignment, lane configuration, and pavement transitions.
- Chapter 630–Geometric Profile Elements: Furnishes guidance for the design of vertical alignment.
- Chapter 640–Geometric Cross Section: Introduces the designer to roadway width, superelevation, and slope design.
- Chapter 641–Turning Roadways: Provides guidance for widening curves to make the operating conditions comparable to those on tangent sections.
- Chapter 642–Superelevation: Provides guidance on superelevating curves and ramps so that design speeds can be maintained.
- Chapter 650–Sight Distance: Addresses passing, stopping, and decision sight distance design elements.

Division Seven addresses design considerations for the area outside of the roadway, and includes clear zone, roadside hazards, safety mitigation, traffic barriers, and impact attenuator systems.

- Chapter 700–Roadside Safety: Presents clear zone design, roadside hazards to consider for mitigation, and some roadside safety features.
- Chapter 710–Traffic Barriers: Provides guidance for the design of traffic barriers based on the design levels identified in the Design Matrices.
- Chapter 720–Impact Attenuator Systems: Introduces the designer to permanent and work zone impact attenuator systems.

Division Eight introduces the designer to traffic safety elements such as work zone traffic control, signing, delineation, illumination, traffic control signals, and Intelligent Transportation Systems (ITS).

- Chapter 810–Work Zone Traffic Control: Addresses the planning, design, and preparation of highway improvement and preservation project plans for modification of traffic patterns during construction.

- Chapter 820–Signing: Presents the use of signing to regulate, warn, and guide motorists.
- Chapter 830–Delineation: Presents the use of pavement markings to designate safe traffic movement.
- Chapter 840–Illumination: Provides guidance on the use of illumination on state highway construction projects.
- Chapter 850–Traffic Control Signals: Offers the designer guidance in the use of power-operated traffic control devices that warn or direct traffic.
- Chapter 860–Intelligent Transportation Systems (ITS): Provides guidance on applying computer and communication technology to optimize the safety and efficiency of the highway system by providing motorists timely traffic condition information.

Division Nine addresses the design considerations of at-grade intersections, roundabouts, road approaches, railroad grade crossings, and traffic interchanges.

- Chapter 910–Intersections At-Grade: Provides guidance for designing intersections at-grade, including at-grade ramp terminals.
- Chapter 915–Roundabouts: Instructs the designer on the design of roundabouts.
- Chapter 920–Road Approaches: Informs the designer about the application and design of road approaches on state highways in unincorporated areas, and in incorporated areas where limited access rights have not been acquired.
- Chapter 930–Railroad Grade Crossings: Addresses the requirements associated with highways crossing railroads.
- Chapter 940–Traffic Interchanges: Provides guidance in the design of interchanges on Interstate highways, freeways, and other multilane divided routes.

Division Ten offers guidance on auxiliary lanes such as climbing lanes and passing lanes; bicycle facilities; pedestrian design considerations; safety rest areas and traveler services; weigh stations; high occupancy vehicle lanes; and transit benefit facilities.

- Chapter 1010–Auxiliary Lanes: Provides guidance on auxiliary facilities such as climbing lanes, passing lanes, slow vehicle turnouts, shoulder driving for slow vehicles, emergency escape ramps, and chain-up areas.
- Chapter 1020–Bicycle Facilities: Serves as a guide for selecting and designing useful and cost-effective bicycle facilities.
- Chapter 1025–Pedestrian Design Considerations: Supplies guidance for designing facilities that encourage safe and efficient pedestrian access.
- Chapter 1030–Safety Rest Areas and Traveler Services: Provides typical layouts for Safety Rest Areas.
- Chapter 1040–Weigh Sites: Provides guidance for the design of permanent, portable, and shoulder-sited weigh sites.
- Chapter 1050–High Occupancy Vehicle Facilities: Presents guidance on evaluating and designing high occupancy vehicle (HOV) facilities.
- Chapter 1060–Transit Benefit Facilities: Provides operational guidance and information for designing transit benefit facilities such as park-and-ride lots; transfer/transit centers; and bus stops and pullouts.

Division Eleven provides guidance for the design of structures for highway projects, including site data for structures, bridges, retaining walls, and noise walls.

- Chapter 1110–Site Data for Structures: Describes the information required by the WSDOT HQ Bridge and Structures Office to provide structural design services.
- Chapter 1120–Bridges: Provides basic design considerations for the development of a preliminary bridge plan and guidelines on basic bridge geometric features.

- Chapter 1130–Retaining Walls and Steep Reinforced Slopes: Provides design principles, requirements, and guidelines for retaining walls and steep reinforced slopes.
- Chapter 1140–Noise Barriers: Addresses the factors that are considered when designing a noise barrier.

Division Twelve addresses the issue of hydraulics, and serves as a guide to highway designers to identify and consider hydraulic-related factors that may impact the design.

- Chapter 1210–Hydraulic Design: Addresses hydraulic considerations for highway projects involving flood plains, stream crossing, channel changes, and ground water.

Division Thirteen provides guidance on the portion of state highways between the traveled way and the right of way boundary.

- Chapter 1300–Roadside Development: Presents guidance on managing the roadside environment, including the area between the traveled way and the right of way boundary, unpaved median strips, and auxiliary facilities such as rest areas, wetlands, and storm water treatment facilities.
- Chapter 1320–Vegetation: Provides a discussion of the use of vegetation in the roadside environment and directs the designer to the Landscape Architect.
- Chapter 1330–Irrigation: Presents design considerations for irrigation on highway projects.
- Chapter 1350–Soil Bioengineering: Offers a discussion of bioengineering and design considerations for the use of bioengineering techniques on highway projects.

Division Fourteen provides guidance on right of way considerations; access point decision reports; limited and managed access; surveying and mapping; monumentation; and fencing.

- Chapter 1410–Right of Way Considerations: Explains the right of way and easement acquisition process.
- Chapter 1420–Access Control: Introduces the WSDOT Access Control program.
- Chapter 1425–Access Point Decision Report: Describes the process for access point revisions on state highways and explains the steps leading up to an Access Point Decision Report.
- Chapter 1430–Limited Access: Provides clarification on limited, full, and modified access control.
- Chapter 1435–Managed Access: Explains the classes of managed access and the permitting process, and provides design considerations.
- Chapter 1440–Surveying and Mapping: Introduces the procedures within WSDOT for project surveying.
- Chapter 1450 Monumentation: Introduces monumentation requirements and procedures.
- Chapter 1460 Fencing: Introduces fencing, the purpose of fencing, the types of fencing, and fencing design criteria.

Chapter 150 Project Development Sequence

150.01 General
150.02 References
150.03 Definitions
150.04 Project Development Sequence

150.01 General

The purpose of Chapter 150 is to describe the project development sequence from the *Washington Transportation Plan* (WTP) through the contract document.

Projects go through a development process to ensure that all elements are considered, that local agencies and the public have an opportunity to comment on the department's proposed action, and that the final product successfully fulfills a transportation need. Changes in project scope, schedule, or budget are reviewed and approved using the Project Control and Reporting Process. Approved changes are reported in the department's quarterly performance report, known as the Gray Notebook.

150.02 References

Revised Code of Washington (RCW) 47.05

Programming and Operations Manual (http://wwwi.wsdot.wa.gov/ppsc/pgmmgt/manual/)

Environmental Procedures Manual – M 31-11, WSDOT

Plans Preparation Manual – M 22-31, WSDOT

*Construction Manua*l – M 41-01, WSDOT

Local Agency Guidelines (LAG) – M 36-63, WSDOThttp://wwwi.wsdot.wa.gov

150.03 Definitions

benefit cost (b/c) ratio A method for prioritizing highway improvement projects. The b/c ratio is determined by dividing measurable benefits by measurable costs for a specific time period; typically 20 years.

Capital Improvement and Preservation Program (CIPP) The Washington State Department of Transportation's (WSDOT's) plan to deliver the program of capital investments in transportation that have been funded in part or in whole by the state Legislature. The CIPP also serves as project documentation relating to the capital budget requests adopted by the Transportation Commission.

capital program management system (CPMS) A mainframe computer database used to develop and manage the highway and marine construction programs. It allows users to establish and maintain project data and is used to manage and deliver statewide construction programs. System screens allow the user to input and maintain project data, manage changes to approved projects, and generate reports to monitor program delivery. CPMS interfaces with the Transportation Information and Planning Support (TRIPS), Priority Array Tracking System (PATS), and Transportation Reporting and Accounting Information System (TRAINS) data bases.

carryforward – federal The apportionment balance, in each federal program, that will be available for the next federal fiscal year. Carryforward consists of the apportionment balance that accumulated and was not used in the three previous federal fiscal years. Unused apportionment is forfeited if it is older than three previous federal fiscal years.

carryforward – state The amount of funds necessary to complete project phases authorized in a previous biennium that will not be available to begin new projects or project phases in a subsequent biennium.

Federal Highway Administration (FHWA) The section of the United States Department of Transportation with jurisdiction over the use of federal transportation funds for state highway and local road and street improvements.

Federal Transit Administration (FTA)
The section of the United States Department of Transportation with jurisdiction over the use of federal funds for financial assistance to develop new transit systems and improve, maintain, and operate existing systems.

Financial Information Retrieval System (FIRS) A computer application that allows the retrieval of accounting and work order information from the Transportation Reporting and Accounting Information System (TRAINS) data base at a "rolled-up" level. For further information, see: http://wwwi.wsdot.wa.gov/FASC/Accounting/firs.pdf.

Geographic Information System (GIS)
A computerized geographic information system used to store data. Data may be used with GIS if the data includes the Accumulated Route Mile (ARM) or State Route Mile Post (SRMP). Global Positioning System (GPS) technology provides a means of collecting data and is an alternative to ARM and SRMP. WSDOT's primary desktop tool to view and analyze GIS data is ArcGIS software.

high accident corridor (HAC) A highway corridor one mile or greater in length where a five-year analysis of collision history indicates that the section has higher than average collision and severity factors.

high accident location (HAL) A highway section typically less than 0.25 mile in length where a two-year analysis of collision history indicates that the section has a significantly higher than average collision and severity rate.

highway construction program (HCP) The comprehensive two-year program and ten-year financial plan of highway improvement and preservation projects selected by priority.

Highway System Plan (HSP) A WSDOT planning document that addresses the state highway system element of the *Washington Transportation Plan* (WTP). The HSP defines the service objectives and the action strategies and costs to maintain, operate, preserve, and improve the state highway system for 20 years. It is the basis for the state highway element for the six-year plan and the biennial state highway construction program. It is periodically updated to reflect completed work, and changing transportation needs, policies, and revenues. It compares highway needs to revenues, describes the "financially constrained" costs of the highway programs, and provides details of conceptual solutions in the improvement program.

Metropolitan Planning Organization (MPO)
A lead agency designated by the Governor to administer the federally-required transportation planning process in a metropolitan area with a population over 50,000. The MPO is responsible for the 20-year long-range plan and *Transportation Improvement Plan* (TIP).

National Highway System (NHS) A network of roadways designated by Congress that consists of all Interstate routes; a large percentage of urban and rural principal arterials; and strategic highways and highway connectors.

pedestrian accident location (PAL) A highway section typically less than 0.25 mile in length where a six-year analysis of accident history indicates that the section has had four accidents in a 0.1 mile segment.

Plans, Specifications, and Estimates (PS&E)
The project development activity that follows project definition and culminates in the completion of contract-ready documents and the Engineer's Cost Estimate. These documents include final plans, specifications, and estimates.

preliminary engineering (PE) A term used to describe the effort needed to arrive at the conceptual solution to address a transportation need, including project establishment and route selection through the PS&E review.

priority array A collection of similar needs identified in the HSP, prioritized based on the methodology adopted by the department to meet the requirements of RCW 47.05.

Priority Array Tracking System (PATS)
A centralized database that allows tracking of highway needs and their solutions. The system is designed to ensure that WSDOT addresses the highest ranked transportation needs. Deficiencies are tracked for each strategy in the HSP.

project control and reporting (PC&R) The Project Control and Reporting office is responsible for monitoring, tracking, and reporting the delivery of the Highway Capital Program in coordination with the Program Management Offices in each of the six WSDOT regions and the Urban Corridors Office.

project summary A document that comprises the project definition, design decisions, and environmental review summary. The document replaces the project prospectus, design report, and environmental database. The project summary ensures that the project scope addresses the need identified in the HSP.

Regional Transportation Planning Organization (RTPO) A planning organization authorized by the Legislature in 1990 as part of the Growth Management Act. The RTPO is a voluntary organization with representatives from state and local governments and is responsible for coordinating transportation planning activities within a region.

Statewide Transportation Improvement Program (STIP) A planning document that includes all federally funded projects and other regionally significant projects for a three-year period. The STIP is a compilation of all projects that are in the TIPs, developed by the regional planning organizations (MPOs and RTPOs). A new STIP must be developed every two years or less, and is approved jointly by the FHWA and FTA for compliance with statutory requirements and financial feasibility.

Surface Transportation Program (STP) A federal program established by Congress in 1991 that provides a source of federal funding for highway and bridge projects.

Transportation Improvement Program (TIP) A three-year transportation improvement strategy required from MPOs by Congress. It includes all projects in the three-year period expected to be financed by federal funds. All federally funded or regionally significant projects must be included in the TIP.

Transportation Information and Planning Support (TRIPS) A mainframe computer system designed to provide engineering, maintenance, planning, and accounting staff with highway inventory, traffic, and accident data.

Washington State Pavement Management System (WSPMS) A computer system that stores data about the condition of all the highways in the state. Information available includes the latest field review, and past contracts for every main line mile of state highway. Calculations are used to determine whether a given section of pavement is a "past due," "due," or "future due" preservation need.

Washington's Transportation Plan (WTP) A WSDOT planning document developed for the Transportation Commission in coordination with local governments, regional agencies, and private transportation providers. It addresses the future of transportation facilities owned and operated by the state and those that the state does not own, but in which it has an interest. It identifies significant transportation investments that are needed. These transportation needs are defined by service objectives and specific desired outcomes for each transportation mode.

150.04 Project Development Sequence

The project development sequence is composed of the following:

(1) Washington State Highway System Plan (HSP)

The HSP is the element of *Washington's Transportation Plan* that addresses the state's highway system. The HSP forecasts transportation needs, provides objectives and action strategies to improve and preserve the highway system, and serves as the basis for the department's capital investment strategies. (To view the *Highway System Plan,* see http://www.wsdot.wa.gov/ppsc/hsp/HSPPlan.htm)

(2) Highway Construction Program

In every odd-numbered year, the Washington State Legislature meets to consider and pass a transportation budget. One piece of this budget is funding for the highway construction program. In order to control expenditures and track budget dollars and commitments, the department groups capital projects into programs, subprograms, and categories based on the action strategies, objectives, and goals in the *Highway System Plan*. The department has identified three subprograms within the preservation program and six subprograms within the improvement program, four of which are discussed in the Improvement Program section.

(a) Prioritizing Project Needs and Solutions

Each category of work within the highway construction program has a set of needs that are identified by comparing a specific action strategy in the *Washington Transportation Plan* to the existing highway system. These needs are met by developing projects to program. The Legislature has directed the department to prioritize (select) projects for each category based on the benefits returned to the transportation user. State law in Priority Programming for State Highways (RCW 47.05) directs WSDOT to identify transportation needs, determine the benefit/cost (b/c) of the solutions, and prioritize the solutions based on the b/c.

(b) Background Information

WSDOT HQ Systems Analysis and Program Development begins the prioritization process for a category of work by identifying the potential benefit(s) associated with solving the need. There are not sufficient resources to analyze the benefits and costs of all needs in each category of the program each biennium, so a prioritization scheme is used to reduce the effort. Because the primary objective of the department's prioritization process is to provide the largest improvement for the least possible cost, needs in each category are ranked based on their potential to provide a benefit. The process includes these steps:

- The regions scope projects to address the needs in rank order. The biennial programming instructions provide guidance to the regions on how far down the ranked "needs lists" to go. To ensure a consistent approach to scoping a project, WSDOT has developed a set of design matrices. Each design matrix sets forth the level of development for a given type of need that would be automatically approved by the department and FHWA. (See Chapters 325 and 340.)
- The regions prepare a cost estimate for the approved scope of work and compare the cost to the potential benefit in order to determine which projects are the most beneficial to construct.

In order to minimize disruptions to the public and take advantage of cost savings, the department may adjust priorities by up to six years.

(c) Building the Program

The basic building blocks for the highway construction program are the project phases in the Capital Improvement and Preservation Program (CIPP). Carryforward project commitments represent job phases that will continue into the next biennium. The book building process starts with these carryforward projects. The regions need to review the carryforward projects and determine the potential for project delays and cost overruns in the current biennium that might affect the next biennium. Maintaining close coordination between the region, HQ Programming, the Project Development Engineer, and the Construction Engineer is necessary to ensure that projects under development and under construction are accomplished as planned.

Building on this foundation, new improvement project phase starts are added based on department policy and Transportation Commission direction. These new project starts represent needs that are identified in the *Highway System Plan*. The first step in adding new projects to the CIPP for the next biennium is to establish a funding target for each category of work within each subprogram. Once HQ has provided the target funding levels, the regions begin to

assemble the highway construction program. It is important to remember that regions can't propose a project unless a need has been identified in the HSP.

After the new projects have been selected and the carryforward projects identified (and their planned expenditures and schedules verified), the program of projects is developed and the project data is input into CPMS for balancing to the target allocations for both dollars and workforce (FTEs). Project summaries are then developed. The program of projects is shared with region executives, and their input is incorporated. Adjustments are made to ensure that the program can be accomplished within the constraints of available workforce and facilities in the region.

(d) Roles and Responsibilities Within WSDOT for Delivering the Highway Construction Program

The WSDOT Budget Office, along with various offices in the Strategic Planning and Programming Division, share responsibility for developing a ten-year capital investment plan for the Commission, including a forecast of available revenue by fund source, and recommend investment levels based on the WTP. Program Development issues programming instructions, based on the preliminary budget targets, which assist the regions as they begin scoping highway projects.

Once a ten-year plan has been determined, and proposed projects scoped, Program Development finalizes a budget request, including a project list that is presented to the Commission for review and submittal to the Legislature. The Legislature sets funding levels for the different programs within the department that will deliver the project list for the funding amount identified in the scoping document.

WSDOT regions, working with support offices, such as Environmental, Utilities, Right of Way, and Construction, design and build the projects that deliver the transportation program.

(e) Categories of Work

The HSP presents the budgets for the Maintenance (M), Operations (Q), Preservation (P), and Improvement (I) programs. Strategies and conceptual solutions are limited to the P & I programs. Each of these programs are broken into sub-programs:

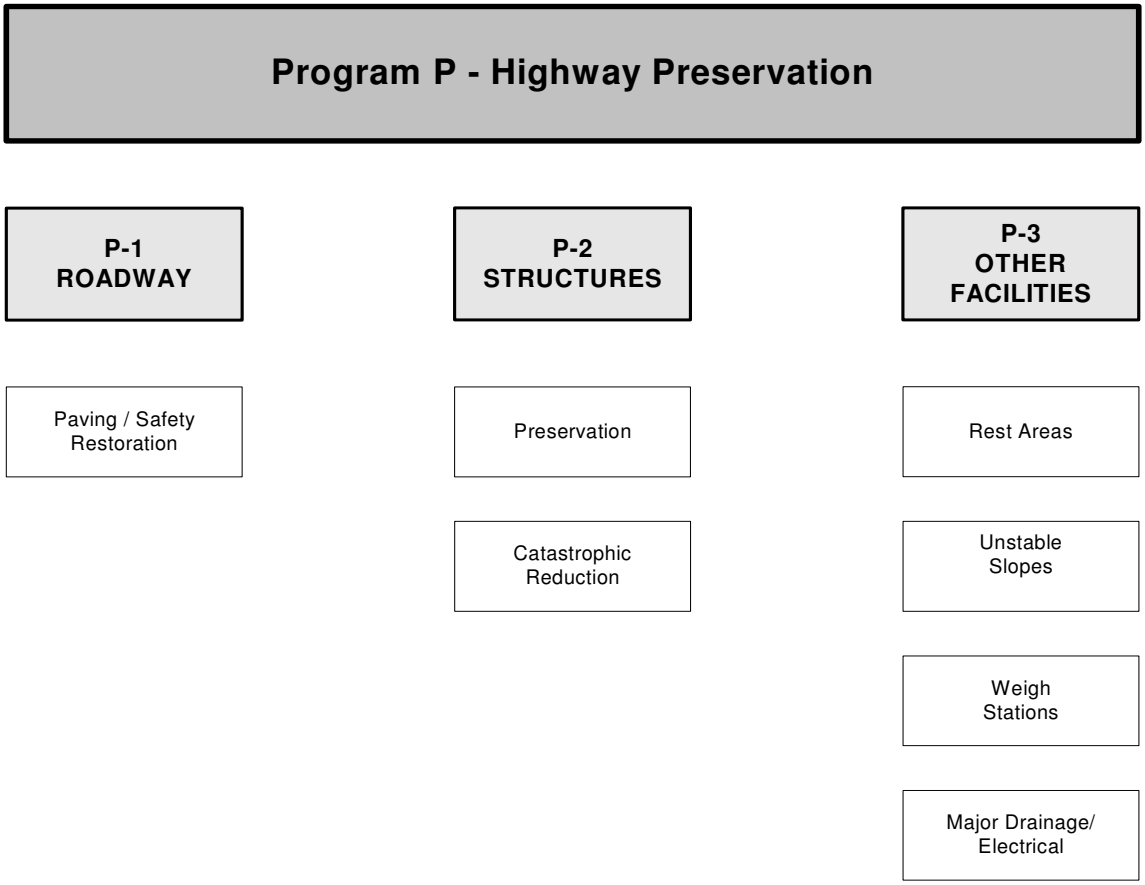

Figure Notes:

Preservation Program (P): Preserve the highway infrastructure cost to effectively protect the public investment.

- **P–1 Paving**
  Repave highways at regular intervals for lowest life cycle cost.
  Restore existing safety features.
- **P–2 Structures**
  Preserve existing structures for operational and structural integrity through rehabilitation or replacement of bridges or other structures.
  Reduce catastrophic failure from naturally occurring events.
- **P–3 Other Facilities**
  Refurbish rest areas to extend service life and improve safety.
  Stabilize known unstable slopes.
  Construct weigh stations to ensure enforcement across the entire highway system.
  Refurbish electrical systems, electronics, and mechanical systems to extend service life and improve safety.
  Rehabilitate or replace existing major drainage features to preserve operational and structural integrity.

Program Elements
Figure 150-1

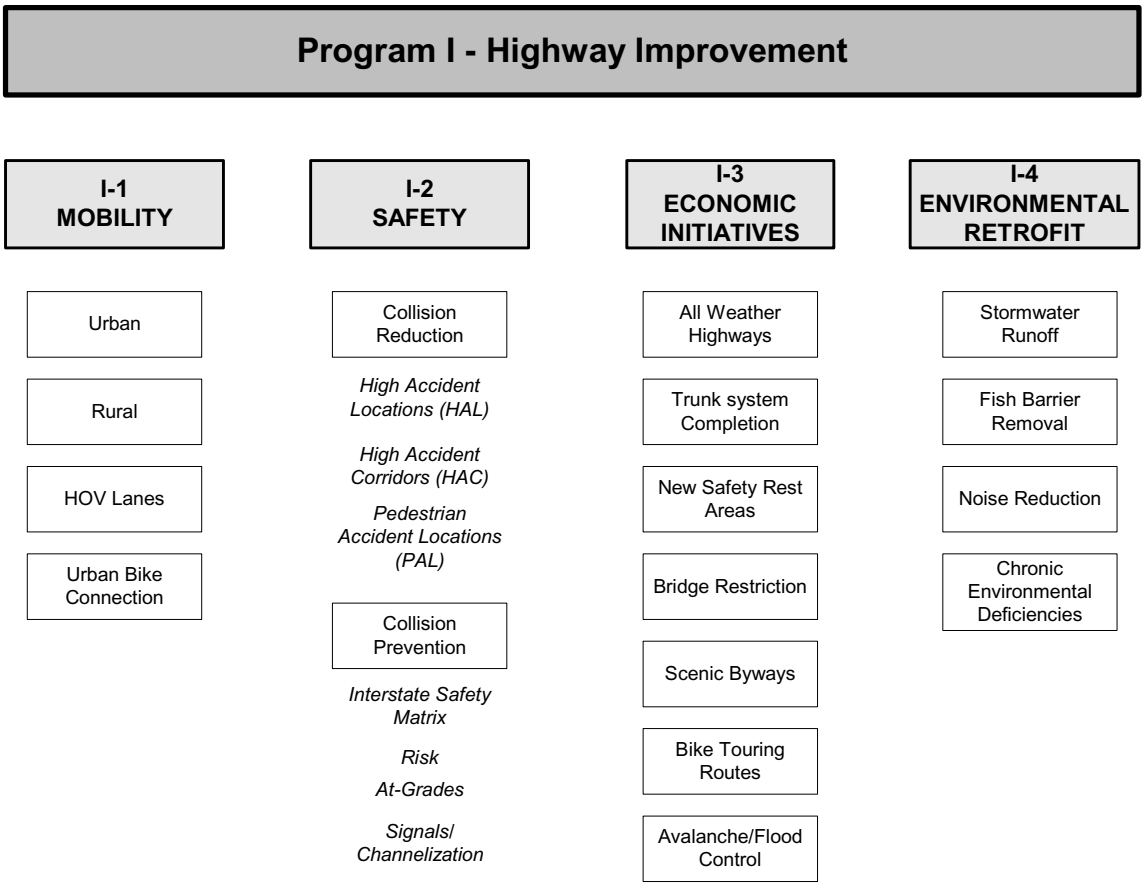

Figure Notes:

Improvement Program (I): Identifies deficiencies in the state highway system and develops solutions for those deficiencies through capital improvement projects.

- **I–1 Mobility**

  Mitigate congestion on urban highways when peak period level of service (LOS) falls below D (Congestion Index 10). For further information, see the *Highway System Plan*, http://www.wsdot.wa.gov/ppsc/hsp/HSPPlan.htm

  Provide uncongested conditions (LOS C-Congestion Index 6) on rural highways.

  Provide bicycle connections on state highways within urban growth areas.

  Complete the Freeway Core HOV Lane system in the Puget Sound region.

- **I–2 Safety**

  Collision Reduction needs include HALs, HACs, and PALs. Needs are ranked based on the societal cost of the accident history. If the Collision Reduction project is programmed within the next six years, regions may combine it with another project to minimize disruption to traffic.

  The needs in Collision Prevention consist of four types: Interstate safety matrix, risk (run off roadway), at-grade intersections, and signals and channelization.

  The needs are prioritized based on the cost benefit of reducing the potential societal cost of accidents, except as noted below.

  The needs in the Interstate safety matrix group are identified by the regions and include any design feature that does not meet the standard specified in the Interstate design matrices. This work is usually done at the same time other work is programmed, such as paving. The needs in the risk (run off roadway) group are identified by HQ Systems Analysis and Program Development, based on roadway and roadside data from the Transportation Data Office. The needs are ranked based on the potential cost of accidents as a result of the existing conditions.

Program Elements

Figure 150-2

At-grade intersections on multilaned, high-speed, access-controlled highways that have a history or the potential for serious accidents are identified by HQ Systems Analysis and Program Development.

The region identifies the needs in the signals and channelization group. Each region is responsible for preparing a prioritized list of needs for locations that meet traffic volume and signal warrants, as detailed in the WSDOT *Traffic Manual*.

Special safety initiative projects are narrowly focused, stand-alone risk reduction projects, such as cable median cross-over barriers and rumble strips.

- **I–3 Economic Initiatives**

All weather highway needs are identified as those sections of highway that are susceptible to damage by heavy loads when the roadway thaws after a freeze.

Trunk system completion needs include the state's T-1 freight corridors (highways that carry ten million tons or more of freight each year) identified by HQ Systems Analysis and Program Development and the Transportation Data Office. The Transportation Commission prioritizes these routes.

The Safety Rest Area Office in the HQ Maintenance and Operations Division works with the regions, specialty groups, and other government agencies to identify locations for new rest areas on state highways and to look for partnership opportunities.

The Restricted Bridges needs are made up of two types of work: low vertical clearance under-crossings on the Interstate (clearance less than 15 feet 6 inches) and load restricted bridges (licensed legal overloads). The Bridge Planning Section identifies these needs with the technical assistance of the Bridge Condition Section. The low vertical clearance structures on the Interstate have been given priority over the load-restricted structures.

The Highways and Local Programs Division and the Transportation Data Office have identified where 4-foot bike shoulders do not exist on the state's six rural bicycle-touring routes. The regions look for opportunities to solve these rural bike needs by combining them with programmed work in other categories. This approach minimizes traffic disruption and reduces contract costs.

HQ Systems Analysis and Program Development has identified roadway segments on T-1 freight corridors (highways that carry ten million tons or more of freight each year) where travelers have experienced delays due to avalanche and flood closures.

- **I–4 Environmental Retrofit**

Environmental Services (ES) surveys all storm water outfalls that flow into a water body. Each of these storm drains is identified as a need and is further rated from high to low.

Fish Barrier Removal needs are identified by the Washington State Department of Fish and Wildlife (WDFW). WDFW has surveyed culverts on the state's highway system and identified those that impede the migration of fish. The WDFW is conducting habitat surveys to determine the potential for migratory fish recovery and is prioritizing the culverts based on the results.

Since 1977, FHWA has funded a program for noise retrofit and made states responsible for mitigating noise-sensitive locations in conjunction with new construction projects. WSDOT's retrofit locations are prioritized based on a b/c ratio.

The Chronic Environmental Deficiency (CED) Program is a statewide program within WSDOT that works with WSDOT's regional staff to identify and fix locations along highways where recent, frequent, and chronic maintenance and/or repairs to the state transportation infrastructure (highway fills, toe slopes, sanding, etc.) are causing impacts to fish and/or fish habitat.

Program Elements
Figure 150-2 (continued)

(3) Project Summary

The project summary is developed in the region when a project is proposed for programming.

The project summary:

- defines the scope of work HQ Systems Analysis and Program Development and the region have agreed to.
- documents the design decisions made while determining the project scope.
- must be as complete and accurate as possible.
- establishes initial preliminary engineering, right of way, and construction cost estimate.
- documents the project delivery schedule.
- requires approval by HQ Systems Analysis and Program Development prior to beginning work on a project.
- documents the potential environmental impacts and permits that may be required.

The intent of this agreement is to identify the need that has generated the project and the proposed solution that will solve that need.

Regions are encouraged to place special emphasis on project scoping, estimating, and scheduling during program development to ensure program delivery stays within appropriated dollars and workforce. Resources available to the regions include the *Highway System Plan*; Route Development Plans; the Design Matrix; the *Roadside Classification Plan*; Environmental Workbench and other planning; and design and environmental documents to ensure that project scoping is consistent.

The environmental section of the project summary establishes the initial environmental classification and documentation required for the project. Environmental classification at the project summary stage has several benefits. It helps in understanding the impacts associated with a project and it helps to establish a realistic schedule and PE cost estimate. All projects require supporting State Environmental Policy Act (SEPA) documentation. National Environmental Policy Act (NEPA) documentation is also required for all projects that are eligible for federal funding.

Regions are encouraged to take full advantage of expertise available from the HQ Systems Analysis and Program Development Branch of the Strategic Planning and Programming Division, FHWA, the Environmental Office, and local agencies when scoping projects to ensure that all aspects are considered, and that the proposed solution is eligible for available funding. These resources can help the regions evaluate a project's impacts and provide the appropriate project direction.

HQ Systems Analysis and Program Development coordinates review of the project summary and forwards any comments to the regions for resolution prior to approval. Once all comments and outstanding issues are resolved, the project summary can be approved and copies distributed.

(4) Environmental Document

The Environmental Document is a statement identifying impacts to the natural and manmade environment as a result of a project. The statement may consist of one or two pages for categorically exempted projects, a SEPA checklist, or an environmental impact statement (EIS) for major projects. (See Chapter 220.)

(5) Design Documentation Package (DDP)

The DDP is a formal document of design considerations and conclusions reached in the development of a project. The Project File records various design recommendations that are reviewed within the department and, when approved, become the project design. (See Chapter 330.)

(6) Right of Way/Access Plans

Right of Way/Access Plans are the official state documents used to acquire real estate, property, and access rights. These plans determine rights of access from abutting property owners, interchange or intersection spacing, access points per mile, or other selective approaches to a highway facility. Right of way plans are used to obtain the "Order of Public Use and Necessity," which is the authority to acquire real property and property rights under eminent domain.

The establishment of access control is considered whenever major improvements, reconstruction, relocation, significant new rights of way, or new facilities are required. Projects not requiring right of way or other property interests skip this phase of project development. (See Chapters 1420, 1430, 1435 and the *Plans Preparation Manual*, M 22-31.)

(7) Contract Document

The contract Plans, Specifications, and Estimates (PS&E) are the final documents required for the advertisement of a construction contract. Contract plans must conform to the basic design features approved in the project summary, environmental documents, and the DDP. The plans and contract specifications must set forth the work in a clear and concise manner to avoid misinterpretation. A tool available to the designer to ensure that required items are addressed during the PS&E preparation is the "PS&E Review Checklist," available on the WSDOT intranet. Projects may go through PS&E preparation, but will not be advertised for construction until all previous phases are complete. (See the *Plans Preparation Manual,* M 22-31.)

Chapter 220 Project Environmental Documentation

220.01 Introduction
220.02 References
220.03 Definitions / Acronyms
220.04 Determining the Environmental Documentation
220.05 Identifying the Project Classification
220.06 Environmental Impact Statements – Class I Projects
220.07 Categorical Exclusions – Class II Projects
220.08 Environmental Assessments – Class III Projects
220.09 Reevaluations
220.10 Commitment File
220.11 Documentation

220.01 Introduction

The term "environmental documentation" refers to the documents produced for a project to satisfy the requirements contained in the National Environmental Policy Act (NEPA) and the State Environmental Policy Act (SEPA). The *Environmental Procedures Manual,* M 31-11 provides detailed instructions on how to determine what level of documentation is required and how to prepare the documents. This section provides a summary of the relevant provisions in the *Environmental Procedures Manual*.

The purpose of the environmental document is to provide decision-makers, agencies, and the public with information on a project's environmental impacts, alternatives to the proposed action, and mitigation measures to reduce unavoidable impacts. Final environmental documents identify and evaluate the project to be constructed. Because projects vary in their level of environmental impacts, the rules on environmental documentation allow for different levels of documentation. As a project's impacts increase, so does the level of documentation.

The environmental office in each region and the Environmental Documentation Section of the WSDOT Headquarters (HQ) Environmental Services Office routinely provide environmental documentation assistance to designers and project engineers.

220.02 References

United States Code (USC) 42 USC Chapter 55 National Environmental Policy Act of 1969 (NEPA)

Code of Federal Regulation (CFR) 23 CFR 771 Environmental Impact and Related Procedures

23 CFR 771.135 Section 4(f) (49 U.S.C. 303). Policy on Lands, Wildlife and Waterfowl Refuges, and Historic Sites

36 CFR 800: PART 800-Protection of Historic and Cultural Properties

40 CFR Parts 1500 – 1508 Council for Environmental Quality Regulations for Implementing NEPA

Revised Code of Washington (RCW) 43.21C State Environmental Policy Act (SEPA)

Washington Administrative Code (WAC) 197-11 SEPA Rules

Washington Administrative Code (WAC) 468-12 WSDOT SEPA Rules

Environmental Procedures Manual, M 31-11, WSDOT

220.03 Definitions / Acronyms

Categorical Exclusion (CE) (NEPA) or Categorical Exemption (CE) (SEPA) Actions that do not individually or cumulatively have a significant effect on the environment.

DCE Documented Categorical Exclusion (NEPA)

Determination of Non-significance (DNS) (SEPA) The written decision by the Region Administrator that a proposal will not have a significant impact and no EIS is required.

Determination of Significance (DS) (SEPA) A written decision by the Region Administrator that a proposal could have a significant adverse impact and that an EIS is required.

Environmental Assessment (EA) (NEPA)
A document prepared for federally funded, permitted or licensed projects that are not categorical exclusions (CE) but do not appear to be of sufficient magnitude to require an EIS. The EA provides enough analysis to determine if an EIS or a FONSI should be prepared.

Environmental Classification Summary (ECS)
A form used to evaluate and classify projects for the construction program. The ECS supports a decision of a documented CE.

Environmental Impact Statement (EIS)
A detailed written statement of a proposed course of action, project alternatives and the possible impacts of the proposal.

Environmental Review Summary (ERS)
Part of the project summary document, it identifies environmental permits and approvals. The ERS is prepared in the region and is required for design approval.

Finding Of No Significant Impact (FONSI)
(NEPA) A federal document indicating that a proposal will not significantly affect the environment and that an EIS is not required.

NEPA National Environmental Policy Act

ROD Record Of Decision

SEPA State Environmental Policy Act

220.04 Determining the Environmental Document

The Environmental Review Summary (ERS) provides the first indication of what form the environmental documentation will take. The ERS is prepared as part of the Project Summary. Project Summaries are prepared during the scoping phase of all projects in the construction program. The Project Summary includes three components:

- Project Definition
- Design Decisions Summary
- Environmental Review Summary

The ERS form is found in the Project Summary database in each regional office. The *Environmental Procedures Manual* has detailed instructions on how to prepare the ERS. The process for classifying projects and determining the environmental document is similar for NEPA and SEPA and generally is as follows:

- Once the project has been sufficiently developed to assess any environmental impacts, the region completes the ERS based on the best information available at the scoping phase of development.
- The Regional Environmental Manager then concurs with the classification by signing the ERS and returns the completed form to the region Design Office for inclusion in the Project Summary package.
- For NEPA, if a project has been determined to be a Categorical Exclusion (CE) the NEPA environmental review process is considered complete. If it is determined that a Documented Categorical Exclusion (DCE), Environmental Assessment (EA), or Environmental Impact Statement (EIS) is required, the region evaluates the project schedule and arranges for preparation of the appropriate document.
- For SEPA, the signing and submittal of the ERS completes the environmental classification process. On projects that are categorized as exempt from SEPA, the environmental process is complete, unless the project requires consultation under the Endangered Species Act. On projects that do not meet the criteria for a SEPA Categorical Exemption (WAC 197-11-800 and WAC 468-12) and require a SEPA checklist (WAC 197-11-960) or an EIS, those documents are prepared as necessary prior to design approval.

The ERS allows environmental staff to consider at this early stage potential impacts and mitigations, and required permits. For many projects, the WSDOT Environmental GIS Workbench coupled with a site visit provide sufficient information to fill out the ERS. (See the *Environmental Procedures Manual.*)

For most WSDOT projects, the Federal Highway Administration (FHWA) is the lead agency for NEPA. Other federal lead agencies on WSDOT projects are the Federal Aviation Administration, Federal Rail Administration, and the Federal Transit Administration (FTA).

220.05 Identifying the Project Classification

Based on the environmental considerations identified during preparation of the ERS, WSDOT projects are classified for NEPA/SEPA purposes to determine the type of environmental documentation that will be required. Projects with a federal nexus (using federal funds, involving federal lands, or requiring federal approvals or permits) are subject to NEPA and SEPA. Projects that are state funded only, with no federal nexus including federal permits, follow SEPA guidelines. Since many WSDOT projects are prepared with the intent of obtaining federal funding, NEPA guidelines are usually followed. The *Environmental Procedures Manual* provides detailed definitions of the classes of projects and lists types of work typically found in each class; FHWA/federal agency concurrence requirements; and procedures for classifying and, if necessary, reclassifying the type of environmental documentation for projects.

Projects subject to NEPA are classified as either Class I, II, or III. Class I projects require preparation of an EIS because the action is likely to have significant adverse environmental impacts. Class II projects are Categorical Exclusions or Documented Categorical Exclusions that meet the definitions contained in 40 CFR 1508.4 and 23 CFR 771.117. These are actions that are not likely to cause significant adverse environmental impacts. Class III projects require an Environmental Assessment (EA) because the significance of the impact on the environment is not clearly established.

SEPA has a similar, but not identical system. SEPA recognizes projects that are categorically exempt, projects that require an EIS, and projects that do not. WSDOT projects that are CEs under NEPA (Class II) may not be categorically exempt under SEPA.

If the project is not exempt under SEPA, WSDOT must issue a threshold determination and then prepare a SEPA Checklist or EIS. The threshold determination may be a determination of non-significance (DNS) or a determination of significance (DS) requiring an EIS. WSDOT may adopt a NEPA EA FONSI to satisfy the requirements for a DNS.

220.06 Environmental Impact Statements – Class I Projects

Class I projects are actions that are likely to have significant impact on the environment because of their effects on land use, planned growth, development patterns, traffic volumes, travel patterns, transportation services, natural resources, or because they are apt to create substantial public controversy. An EIS may follow an EA if significant impacts are discovered during preparation of an EA. The *Environmental Procedures Manual* has details on EIS documents and procedures. WSDOT typically prepares a joint NEPA/SEPA EIS to satisfy both statutes.

Examples of projects that usually require an EIS, as referenced in 23 CFR 771.115, are:

- New controlled-access freeway
- Highway projects of four or more lanes on a new location
- New construction or extension of fixed rail transit facilities (e.g., rapid rail, light rail, commuter rail, automated guideway transit)
- New construction or extension of a separate roadway for buses or high-occupancy vehicles not located within an existing highway facility
- Construction of a new ferry terminal or large-scale changes to existing terminal facilities

Although examples are given, it is important to remember that it is the size and significance of the potential impacts that determines the need for an EIS, not the size of the project. “Significance” is not always clearly defined but is generally determined by the impact’s “context” and “intensity.” Having a significant impact in just one area is sufficient to warrant preparation of an EIS.

Only about three percent of WSDOT's projects go through the EIS process. Typically these are the larger, more complicated projects often in urban areas or involving new right-of-way and important natural or cultural resources. The process takes from two to five years or longer depending on the issues and stakeholders. EISs are expensive because of the amount of information produced, the level of design required, the frequency of redesign to address issues that are discovered, and the higher level of agency and public involvement. WSDOT is preparing an 'EIS Reader-Friendly Tool Kit' to simplify the content of EISs and to improve them as a communication tool to inform the public and decision-makers. Both federal and state initiatives exist to streamline the EIS process and reduce the costs.

220.07 Categorical Exclusions – Class II Projects

The FHWA NEPA Regulations identify project types that qualify as CEs (see 23 CFR 771.117). In general, CEs are actions that, based on past experience with similar projects, do not have significant environmental impacts. CEs are subject to reevaluation by FHWA where there are unusual circumstances, such as new environmental impacts; controversy on environmental grounds; unforeseen impacts to cultural, historic or recreational resources (Section 4(f) or Section 106); or inconsistencies with federal, state, or local laws.

CEs are defined further by two subcategories: CEs not requiring FHWA concurrence and Documented Categorical Exclusions (DCE). Projects defined as CEs not requiring FHWA concurrence must meet the requirements of the Memorandum of Understanding Between WSDOT and FHWA on Programmatic Categorical Exclusion Approvals, signed May 25, 1999 (see *Environmental Procedures Manual*). This may include preparation of a Biological Assessment (BA) to document effects to endangered and threatened species. If a "no effects" determination is the outcome of the BA, then the only NEPA documentation required is a signed ERS that is included in the Project Summary package sent to HQ Systems Analysis and Program Development. No other NEPA documentation or approval by FHWA is required.

For DCEs, additional environmental documentation is required and FHWA approval must be obtained before the Project File can be approved. All environmental documentation must be completed before finalizing the PS&E package and going to ad. The ERS is then renamed the Environmental Classification Summary (ECS), signed by the WSDOT Regional Environmental Manager, and sent with federal permits and/or documentation to FHWA for approval.

After obligation of project design funds, detailed environmental studies for CE documentation may be required for DCE projects to determine the environmental, economic, and social impacts. WSDOT then finalizes the ECS and submits it to FHWA for final approval.

220.08 Environmental Assessment – Class III Projects

Under NEPA, when the significance of the impact of a proposed project on the environment is not clearly established, an Environmental Assessment (EA) is prepared to determine the extent of environmental impact and to determine whether an EIS is needed. WSDOT may adopt the EA to satisfy requirements for a SEPA DNS, but the EA will not satisfy the EIS requirement under SEPA. No EIS is required when the EA supports a NEPA Finding of No Significant Impact (FONSI). Issuance of a FONSI (normally by the FHWA) is the final step in the EA process. (See Section 411.04 of the *Environmental Procedures Manual* for details on EA documentation and procedure.)

220.09 Reevaluations

Both NEPA and SEPA allow for reevaluating the project classification or environmental document. In general, reevaluations are required when there are substantial changes to the scope of a project, such that the project is likely to have significant adverse environmental impacts, or if there is new information that increases the likelihood that a project will have significant adverse environmental impacts. Reevaluations are also required if project construction has not begun within 5 years of completing the NEPA process.

As FHWA must concur with the NEPA classification, any major change in a project classification for a project involving federal funds requires the processing of a revised ECS form. Minor changes may be handled informally, if FHWA concurs.

For SEPA, when the scope of a project is changed, a revised ERS is normally required with some exceptions. As part of that revision process, the environmental classification needs to be reassessed. The decision on whether or not to revise the ERS is made by the regional Environmental Office in coordination with the region Program Management Office. For many minor scope changes, a new ERS is not required. A note to the file or a follow-up memo is then prepared to document the revision.

In some cases, new circumstances may cause a change in the environmental classification but not a change in scope. A note to the file or a follow-up memo documents any changes in classification.

220.10 Commitment File

As an initial part of project development, the region establishes a project commitment file. Establishment of this file generally coincides with preparation of the environmental document or might be at later stages as required. The file consists of proposed mitigating measures, commitments made to resource or other agencies with permitting authority, and other documented commitments made on the project. Also included in the file are design and environmental commitments. Other commitments types (ROW, Maintenance, etc.) may be added at the region's discretion.

The region continues to maintain the commitment file as a project progresses through its development process. Whenever commitments are made, they are incorporated into project documents and transferred from one phase of the project to the next. Commitments are normally included or identified in the following documents or actions:

- Environmental documents and consultations
- Design Documentation Package (DDP)
- Environmental permits
- MOUs/ Letters to stakeholders
- Right of way plans
- Access plans
- Findings and order from access hearings
- Contract document
- Preconstruction conference
- Change orders
- End of project report
- Maintenance

To organize and track commitments made during the development and implementation of a project, WSDOT has established a Commitment Tracking System (CTS). This system provides easy access and retrieval of commitment information. Reports from the system establish the commitment record for the project file. When a commitment is made, log it in the CTS. The entry requires sufficient detail necessary to document the commitment, including references to correspondence, agreement numbers, etc. A commitment may be revised when WSDOT and the organization or individual involved agree to the revision.

When commitments are completed, the CTS is updated with the date the commitment was finished and appropriate comments. Commitments requiring ongoing maintenance need to be formally passed off to Maintenance and Operations for incorporation into the Maintenance Program.

220.11 Documentation

A list of documents that are to be preserved in the Design Documentation Package (DDP) or the Project File (PF) is on the following website: http://www.wsdot.gov/eesc/design/projectdev/

Chapter 240 Environmental Permits and Approvals

240.01 Introduction
240.02 Permits and Approvals
240.03 Project Types and Permits
240.04 Design Process and Permit Interaction

240.01 Introduction

Washington State Department of Transportation (WSDOT) projects are subject to a variety of federal, state, and local environmental permits and approvals. The *Environmental Procedures Manual,* M 31-11, provides detailed guidance on the applicability of each permit and approval. Because the facts of each project vary and the environmental regulations are complex, reliance on either the *Design Manual* or the *Environmental Procedures Manual* is insufficient. Region and Headquarters (HQ) environmental staff should be consulted.

240.02 Permits and Approvals

The Environmental Review Summary (ERS) prepared as part of the Project Summary identifies some of the most common environmental permits that might be required based on the information known at that stage. As the project design develops, additional permits and approvals can be identified. Conducting project site visits for engineering and environmental features may reduce project delays due to late discoveries. Coordination with region and HQ environmental staff is recommended.

Figures 240-1a through 1e provide a comprehensive list of the environmental permits and approvals required by WSDOT projects. For each permit or approval, the responsible agency is identified, the conditions that trigger the permit are listed, the relevant sections of the *Environmental Procedures Manual* are provided, and the statutory authority is cited.

The conditions that trigger a permit or approval are discussed in detail in the *Environmental Procedures Manual*. The permit triggers are subject to interpretation and change as new regulations are developed or court decisions are rendered that alter their applicability. Determining which permits and approvals apply and how they apply is dependent on the facts of each project. Consult environmental staff at each stage of the project design to review the permits and approvals that might be required based on the project design.

Permit or Approval	Responsible Agency	Conditions Requiring	Environmental Procedures	Statutory Authority
National Environmental Policy Act (NEPA)	FHWA and WSDOT	Activities that require federal permits, approvals, or funding trigger NEPA procedural and documentation requirements.	320, 410-480	42 USC 4321 23 CFR 771 40 CFR 1500-1508
State Environmental Policy Act (SEPA)	Ecology	Any activity not categorically exempt triggers SEPA procedural and documentation requirements.	410-480	RCW 43.21C WAC 197-11, WAC 468-12
Corps of Engineers Section 404 Individual Permits (Uses Joint Aquatic Resource Permits Application [JARPA])	COE	Any discharging, dredging, or placing of fill material in waters of the U.S. and adjacent wetlands	431, 432, 437, 452, 510	Section 404 of the Clean Water Act (CWA); 33 USC 1344, 33 CFR 330.5 and 330.6
Corps of Engineers Section 404 Nationwide Permits (NWP) (Uses JARPA)	COE	NWP information is presented in a 2002 special public notice issued by the COE. A total of 44 NWPs for a range of activities in waters of the US are described in the public notice.	431, 432, 437, 452, 510	Section 404 of the CWA; 33 USC 1344, 33 CFR 330.5 and 330.6
Water Quality 401 Certification (Uses JARPA)	Ecology Headquarters, Shorelands and Environmental Assistance Program, Coordination Section; US EPA on Tribal and Federal land	Any activity requiring a federal permit for discharging into waters must receive certification from the state that the discharge complies with that state's water quality standards.	431, 432, 437, 452, 453	33 USC 1341, 33 CFR 320.4; RCW 90.48, WAC 173-225
Coastal Zone Management (CZM) Certification (Uses JARPA)	Ecology Headquarters, Shorelands and Environmental Assistance Program	Any activity requiring a federal permit/license must certify that the activity will comply with the State's Coastal Zone Management Program (Shoreline Management Act).	431, 432, 437, 452, 520	16 USC 1456, 33 CFR 320.3, RCW 90.58
Coast Guard Section 9 Bridge Permit (Uses JARPA)	U.S. Coast Guard	Any work on bridges and causeways in navigable waters or waters that are susceptible to improvement for transporting interstate or foreign commerce, or waters that are used by boats 21 feet or more in length.	431, 432, 452, 453	Section 9 of the Rivers and Harbors Act; 33 USC 401; 33 CFR 114 and 115; Federal Aid Highway Act of 1987. Section 123(b)
Corps of Engineers Section 10 Permit (Uses JARPA)	COE	Any obstruction, alteration, or improvement of any navigable water, including rechanneling, piers, wharfs, dolphins, bulkheads, and buoys.	431, 432, 452	Section 10 of the Rivers and Harbors Act; 33 USC 401; 33 CFR 330.5 and 330.6
Threatened and Endangered Species	USFWS and NMFS	Projects affecting critical habitat of species listed under the ESA may be subject to water quality and wetland permits listed in Section 431.06 and Section 437.06.	436, 447, 510, 520	16 USC 1531-1543

Permits and Approvals
Figure 240-1a

Permit or Approval	Responsible Agency	Conditions Requiring	Environmental Procedures	Statutory Authority
Historic Preservations Act - Section 106	OAHP SHPO	Potential impacts to historic or archaeological properties trigger Section 106 procedural and documentation requirements.	411, 456	16 USC 470 Sec.106 36 CFR 800 RCW 43.51.750
Land and Water Conservations Act - Section 6(f)	FHWA and Affected Agency (WSDOT)	Use of lands purchased with LWCA funds triggers Section 6(f) procedural and documentation requirements.	411, 455	LWCA, 16 USC
U.S. Dept of Transportation Act - Section 4(f)	FHWA and Affected Agency (WSDOT)	Use of park and recreation lands, wildlife and waterfowl refuges, and historic sites of national, state, or local significance triggers Section 4(f) procedural and documentation requirements.	411, 455	49 USC 1651 Sec. 4 (f) 23 CFR 138
Wild and Scenic Rivers	FHWA and Affected Agency	No specific permits are required for projects in wild and/or scenic river corridors, but water quality permits may apply.	453	16 USC 1271
Farmland Conversion	NRCS Counties/Cities	NRCS Form AD1006 approval may be required if project entails conversion of farmlands. Local grading permits may also be required.	454	7 USC 4201 7 CFR 650
Airport/Highway Clearance	FAA (Federal)	Airspace intrusion by a highway facility (i.e. proposed construction in the vicinity of public use or military airports) may require FAA notification.	460	FHPM 6-1-1-2 FAA Regs. Part .77
(NPDES Municipal Stormwater Discharge General Permit	Ecology	WSDOT projects that discharge stormwater. There are four geographical areas covered by separate general permits that are based on watershed boundaries: Island, Snohomish, South Puget Sound, and Cedar/Green.	431, 433	33 USC 1342, RCW 90.48, WAC 173-226
NPDES Stormwater Construction Permit	Ecology	WSDOT construction activities disturbing more than 5 acres.	431, 433	33 USC 1342, RCW 90.48, WAC 173-226
NPDES Sand and Gravel General Permit	Ecology	Discharges of process water and stormwater associated with sand and gravel operations and rock quarries.	431, 433	33 USC 1342, RCW 90.48; WAC 173-226
NPDES Stormwater Industrial Permit	Ecology	Ferry-related activities that discharge stormwater to waters of the state.	431, 433	33 USC 1342, RCW 90.48; WAC 173-226
Underground Injection Control	Ecology	Injection well that may contaminate drinking water.	433	40 CFR 144 RCW 43-21A.44 , WAC 173-218

Permits and Approvals
Figure 240-1b

Permit or Approval	Responsible Agency	Conditions Requiring	Environmental Procedures	Statutory Authority
Hazardous Waste Tracking Form	Ecology	A WAD tracking number from Ecology is required for transport, storage, or disposal of dangerous waste.	447	WAC 173-303
Water Quality Permit. Use of Herbicides to Control Noxious Weeds on WSDOT Properties and Projects within the State of Washington	Ecology, Environmental Coordination Section, Federal Permit Manager for WSDOT	Application of herbicides to waters of the state at WSDOT-owned or –managed sites to control noxious weeds.	431	RCW 90.48.445, and WAC 173-201A-110
Administrative Order # DE99WQ-003. WSDOT Use of Herbicides to Control Non-noxious Weeds on WSDOT Properties and Projects within the State of Washington	Ecology, Environmental Coordination Section, Federal Permit Manager for WSDOT	Approved methods of application must be followed and careful record keeping must be documented. WDFW must be consulted for identification of salmonid bearing waters and special seasonal timing restrictions. Restrictions and public notice requirements are placed on herbicide application within 0.5 mile of areas of potential public use.	431	RCW 90.48, and WAC 173-201A-110
Water Right Permit	Ecology, Water Resources Program	Any withdrawal of surface or groundwater for a WSDOT activity or project.	431, 433	RCW 90.03; 90.44; 90.54
State Waste Discharge (SWD) Permit	Ecology	Any activity that will discharge or dispose of municipal and industrial wastewater into groundwaters of the state, or discharge industrial wastewater to a NPDES-permitted wastewater treatment plant. SWD permits are different from NPDES permits because NPDES permits regulate discharges directly to water or stormwater systems.	433	RCW 90.48; WAC 173-226
Water System Project Approvals	Washington State Department of Health or County/City Department of Health	Any project in which there are two or more water service connections for human consumption and domestic use.	431, 433	RCW 43.20A; WAC 246-290 through 293
Hydraulic Project Approval (HPA)	WDFW	Any project that will use, cross, divert, obstruct, or change the natural flow or bed of any of the salt or fresh waters of the state. Regulated activities include culvert work, stream realignment, and bridge replacement.	431, 432, 436, 447, 452, 453, 510, 520	RCW 75.20.100; WAC 220-110;

Permits and Approvals
Figure 240-1c

Permit or Approval	Responsible Agency	Conditions Requiring	Environmental Procedures	Statutory Authority
Fish Habitat Enhancement Project Application	WDFW	Streamlined process for projects designed to enhance fish habitat. Application is in addition to JARPA.	436	
Aquatic Resource Use Authorization (Uses JARPA)	DNR	Included in JARPA.	436, 437, 520	RCW 79.90 WAC 332-30
Easements	DNR	Any activity that fills, crosses over, bridges, or is on the beds of navigable waters of the state.	436, 437, 520	RCW 47.12
Monument Removal	DNR	Removal or destruction of a monument.	451	
Operating Permit for Surface Mining	DNR, USFS, BLM	Surface mining (pit and quarry sites); more than 3 acres disturbed at one time or pit walls more than 30 feet high and steeper than 1:1; pit site reclamation (WDNR). Borrow pits on federal land may require a permit or easement from the land-management agency.	420, 510	RCW 78.44
Forest Practices Application	DNR	Road construction, pits, pesticide use, and other specified activities on public or private forest land (i.e., land capable of supporting merchantable timber).	455	RCW 76.09 WAC 222
Shoreline Substantial Development Permit (Uses JARPA)	Counties or Cities	Qualified activities within shoreline jurisdiction – lakes/reservoirs 20 acres or greater, streams with 20 cfs annual flow, marine water, and all areas landward for 200 feet of OHWM.	431, 432, 437, 452, 520	RCW 90.48, WAC 173-10 through 173-28
Flood Plain Development Permit (Uses JARPA)	Counties or Cities	Any structure or activity that may adversely affect the flood regime of a stream within the flood zone.	432	RCW 86.16; WAC 173-158
Critical Areas Ordinance (Uses JARPA)	Counties and Cities	Any activity involving critical areas as regulated by the local jurisdiction. Critical areas include wetlands, critical recharge areas to aquifers, fish and wildlife habitat conservation areas, frequently flooded areas, and geologically hazardous areas.	420, 431, 436, 437, 451, 520	RCW 36.70A

Permits and Approvals
Figure 240-1d

Permit or Approval	Responsible Agency	Conditions Requiring	Environmental Procedures	Statutory Authority
Clearing, Grading, and Building Permits	Counties / Cities	Clearing and grading of land for development with impacts outside WSDOT right of way (includes connecting streets, frontage roads, etc.). Construction of any building for human habitation.	420, 451, 454, 460, 520	RCW 36.21.080
Temporary Air Pollution	Ecology, Local Clean Air Agencies, Fire Protection Agencies	Pollutants above allowed levels for temporary periods; includes building demolition and brush burning. Regulations may limit the type, size, or timing of brush burning.	425	RCW 70.94
New Source Construction	Ecology, Local Clean Air Agencies	Air pollution from a point source (e.g., asphalt plants, rock crushers).	425	RCW 70.94.152
Noise Variance	Counties / Cities	Construction and maintenance activities during nighttime hours may require a variance from local noise ordinances. Daytime noise from construction is usually exempt.	446	WAC 173-60
Archaeological Resources Protection Permit	Tribes Federal Landowners, (e.g. BLM, COE, NPS)	Excavation or removal of archaeological resources from tribal or federal land.	456	43 CFR 7.6 – 7.11

BLM – Bureau of Land Management
CFR – Code of Federal Regulations
COE – Corps of Engineers
CWA – Clean Water Act
CZMA – Coastal Zone Management Act
DNR – Department of Natural Resources
DOE – Department of Ecology
EPA – Environmental Protection Agency
ESA – Endangered Species Act
FERC – Federal Energy Regulatory Commission
LWCA – Land and Water Conservation Act
NMFS – National Marine Fisheries Service
NPDES – National Pollution Discharge Elimination System
NPS – National Park Service
NRCS – Natural Resources Conservation Service
OAHP – Office of Archaeology and Historic Preservation
OHWM – Ordinary High Water Mark
RCW – Revised Code of Washington
SHPO – State Historic Preservation Officer
USFS – U.S. Forest Service
USFWS – U.S. Fish and Wildlife Service
WAC – Washington Administrative Code
WAD – EPA, Washington State waste ID tracking number
WDFW – Washington State Department of Fish and Wildlife

Permits and Approvals
Figure 240-1e

240.03 Project Types and Permits

Understanding and anticipating what permits and approvals may be required for a particular project type will assist the designer in project delivery. This section provides information on what project types are likely to trigger which permits. The purpose of this section is to inform designers of the potential for permits and does not substitute for the information developed in the Environmental Review Summary prepared during the Project Summary or more specific permit information developed during design. The intent is to provide a familiar and reasonably quick method for gauging the relative complexity of the permit process. Designers are encouraged to use the expertise in the region environmental office and the HQ Environmental Services Office.

To make the evaluation familiar, this chapter uses the design matrices developed in Chapter 325, as a template. The project types and definitions are found in Chapter 325 with the exception of some additional project types for bridge work. These additional bridge projects are defined below. Rather than identify levels of design for each project type, the matrices identify permits and approvals. While every project is unique to some degree, there are common facts associated with project types that allow for a level of predictability. As the project type gets more complex, the predictability of which environmental permits and approvals may be triggered decreases.

Figures 240-2 through 240-7b use the predictability about project types and combine that with assumptions on environmental conditions to generate probabilities about required permits and approvals. The probabilities cannot be substituted for a fact-based analysis of the project and the applicability of any particular environmental permit or approval. Contact region or HQ environmental staff before decisions are made about whether a permit or approval applies. Coordination with the HQ Bridge and Structures Office and the HQ Environmental Services Office is recommended for bridge projects.

The probabilities for needing a permit are divided into low, medium, and high. A low probability generally means that the thresholds for triggering an environmental permit or approval may not be reached under the assumptions behind the project type. A medium probability means that there is the potential to trigger the application of the permit or approval. A high probability means that there is a likelihood of triggering the permit or approval.

The assumptions underlying the project types and probabilities are shown as endnotes following the matrices (Figures 7a – 7c). Some general assumptions were made regarding the project types; for main line projects on the Interstate, National Highway System main line (except Interstate), or non-National Highway System, all bridgework is assumed to be over water. For interchange projects on the Interstate and non-Interstate, all bridgework is assumed to be over roads. (See Chapter 325.)

The environmental permits and approvals selected for inclusion in the matrices represent the ones that are most frequently triggered. The other permits and approvals listed in Figure 240-1a through 1e are more limited in their application and often require very specific fact situations. They are discussed in more detail in the *Environmental Procedures Manual*.

The additional bridge projects are as follows:

- **Bridge Replacement (Obsolete, Structural):** Projects to replace or rehabilitate state-owned bridges when continued maintenance and preservation strategies can no longer accommodate safe, continuous movement of people and goods. Includes new or replacement bridge (on or over, main line, interchange ramp, or water body), and repair or replacement of reinforced concrete, steel, and/or timber bridges. Obsolete replacement typically includes bridges that have a narrow width or low vertical clearance or a restrictive waterway opening. Structural replacement is a replacement of a bridge that has a structural deficiency in a superstructure or substructure element.

- **Existing Bridge Widening:** Widening an existing bridge for an existing highway.
- **Bridge Deck Rehabilitation:** Structures preservation projects that repair delaminated concrete bridge deck and add a protective overlay that will provide a sound, smooth surface; prevent further corrosion of the reinforcing steel; and preserve operational and structural capacity. The goal is to ensure safe, long-lasting riding surfaces on all reinforced concrete bridges.
- **Bridge Scour Countermeasures:** Measures undertaken to reduce the risk of bridge foundation scour damage and stream bank erosive forces that increase the potential of bridge collapse due to flooding and long-term waterway changes. The goal is to maintain the structural integrity of the roadway prism and highway structures. Bridge scour repair can include repair to the streambed around a bridge column or repairs to stream banks near a bridge. This category typically involves an in-depth engineering and environmental review for site and/or reach processes. Extensive documentation and permitting are typically needed. Early and close coordination with the permit agency representatives through Regional environmental staff is essential. Close coordination with the HQ Bridge Preservation Office, Hydraulics Branch, and Environmental Services Office (watershed, permit program) are useful to ensure a one-WSDOT project approach is established early in the design phase.
- **Steel Bridge Painting:** Measures undertaken to preserve the load-carrying capacity of steel bridges by maintaining properly functioning paint systems to provide protection against corrosion. These measures include high-pressure washing and spot abrasive blasting to prepare steel surfaces for painting. This category typically involves discharge of wastewater into waters of the state and the decisions surrounding the need for full or partial containment of the wash water and blast media used for preparing the steel surfaces. Early and close coordination with the Bridge Management Engineer is necessary. A thorough review of the Standard Specifications current Water Quality Implementing Agreement (WQIA), and available Programmatic Permits, such as the General Hydraulic Project Approval (GHPA) and National Pollution Discharge Elimination System (NPDES) permits, is also recommended. Early project scoping for determination of wildlife usage is another factor for early coordination with all departments.
- **Bridge Seismic Retrofit:** Seismic retrofit of a bridge element (typically bridge columns). Measures undertaken to reduce the vulnerability of existing Washington State-owned bridges in the high to moderate seismic risk areas to earthquake damage that could cause collapse, excessive repair costs, or lengthy closures to traffic. This includes Phase 1 repairs (prevent span separation), Phase 2 repairs (retrofit single-column supports) and Final Phase (retrofit multiple-column supports).
- **Special Bridge Repair (Electrical/ Mechanical Retrofit):** Rehabilitating a major portion of an existing bridge to include electrical and mechanical repairs, such as for a movable bridge, a bridge over navigable water, or sign support structures.
- **Other Bridge Structures:** Major repair or replacement of Sign Bridges, Cantilever Sign Supports, Bridge Mounted Sign Supports, Tunnels, and High Mast Luminaire Poles.
- **New Special Structures:** Measures taken to build a new floating, movable, suspension, or cable stayed bridge for new or existing roadway.

⇩ Project Type / Permit or Approval(***) ⇨	Section 404 Individual Permits	Section 404 Nationwide Permits (NWP)(1)	Water Quality 401 Certification	Coastal Zone Management (CZM) Certification	Threatened and Endangered Species	Hydraulic Project Approval (HPA)	Shoreline Substantial Development Permit	Flood Plain Development Permit	Aquatic Resource Use Authorization	NPDES Municipal Stormwater Permit	NPDES Stormwater Construction Permit	NPDES Industrial Discharge Permit	State Waste Discharge (SWD) Permit	Section 9 Bridge Permit	Section 10 Permit	Section 106	Section 4(f) 6(f)	Critical/Sensitive Areas Ordinances	Noise Variance
(1-1) Preventive Maintenance																			
Pavement Restoration																			
(1-2) Diamond Grinding	L	L	L	L	L	L	M	L	L	H	L	L	L	L	L	L	L	L	M
(1-3) Milling with HMA Inlays	L	L	L	L	L	L	M	L	L	H	L	L	L	L	L	L	L	L	M
(1-4) Nonstructural Overlay	L	L	L	L	L	L	M	L	L	H	L	L	L	L	L	L	L	L	M
Pavement Rehab./Resurf.																			
(1-5) HMA Structural Overlays	L	L	L	L	L	L	M	L	L	H	L	L	L	L	L	L	L	L	M
(1-6) PCCP Overlays	L	L	L	L	L	L	M	L	L	H	L	L	L	L	L	L	L	L	M
(1-7) Dowel Bar Retrofit	L	L	L	L	L	L	M	L	L	H	L	L	L	L	L	L	L	L	M
Bridge Rehabilitation																			
(1-8) Bridge Widening	M	M	M	M	M	H	H	M	L	L	L	L	L	M	M	M	L	M	L**
(1-8a) Existing Bridge Replacement	M/H	H	H	H	M/H	H	H	M	M	H	H	L	L	L	L	H	M	M	M
(1-8b) Bridge Deck Rehabilitation	M	L	L	H	M	M	H	L	L	H	L	L	L	M	L	M	L	L	M
(1-8c) Bridge Scour Countermeasures	M	H	H	H	H	H	H	L	M	L	L	L	L	M	M	M	L	H	L
(1-8d) Steel Bridge Painting	L	L	H	H	M	H	L	L	L	L	L	L*	L	M	L	L	L	L	M**
(1-8e) Bridge Seismic Retrofit	L	M	M	M	M	H	L	L	L	L	L	L	L	M	L	L	L	L	L
(1-8f) Special Bridge Repair	L	M	M	M	M	M	L	L	L	L	L	L	L	M	L	L	L	L	M
Safety																			
(1-9) Median Barrier	L	M	M	L	L	L	L	L	L	H	M	L	L	L	L	L	L	L	L
(1-10) Guardrail Upgrades	L	M	M	L	L	L	M	L	L	H	M	L	L	L	L	L	L	L	L
(1-11) Bridge Rail Upgrades	L	L	L	H	L	L	H	L	L	H	L	L	L	L	L	M	L	L	L
Reconstruction																			
(1-12) New/Reconstruction	M/H	H	H	H	M/H	H	H	M	M	H	H	L	L	L	L	H	M	M	M

(See endnotes for explanation of matrices)

Project Environmental Matrix 1
Permit Probabilities for Interstate Routes (Main Line)
Figure 240-2

⇩ Project Type / Permit or Approval ⇨	Section 404 Individual Permits	Section 404 Nationwide Permits (NWP)	Water Quality 401 Certification	Coastal Zone Management (CZM) Certification	Threatened and Endangered Species	Hydraulic Project Approval (HPA)	Shoreline Substantial Development Permit	Flood Plain Development Permit	Aquatic Resource Use Authorization	NPDES Municipal Stormwater Permit	NPDES Stormwater Construction Permit	NPDES Industrial Discharge Permit	State Waste Discharge (SWD) Permit	Section 9 Bridge Permit	Section 10 Permit	Section 106	Section 4(f) 6(f)	Critical/Sensitive Areas Ordinances	Noise Permit
(2-1) Preventive Maintenance																			
Pavement Restoration																			
(2-2) Diamond Grinding	L	L	L	L	L	L	L	L	L	H	L	L	L	L	L	L	L	L	M
(2-3) Milling with HMA Inlays	L	L	L	L	L	L	L	L	L	H	L	L	L	L	L	L	L	L	M
(2-4) Nonstructural Overlay	L	L	L	L	L	L	L	L	L	H	L	L	L	L	L	L	L	L	M
Pavement Rehab./Resurf.																			
(2-5) HMA Structural Overlays	L	L	L	L	L	L	L	L	L	H	L	L	L	L	L	L	L	L	M
(2-6) PCCP Overlays	L	L	L	L	L	L	L	L	L	H	L	L	L	L	L	L	L	L	M
(2-7) Dowel Bar Retrofit	L	L	L	L	L	L	L	L	L	H	L	L	L	L	L	L	L	L	M
Bridge Rehabilitation																			
(2-8) Bridge Deck Rehabilitation	M	L	L	H	M	M	H	L	L	H	L	L	L	M	L	M	L	L	M**
(2-8a) Steel Bridge Painting	L	L	H	H	M	H	L	L	L	L	L	H	L	M	L	L	L	L	L
(2-8b) Bridge Seismic Retrofit	L	M	M	M	M	H	L	L	L	L	L	L	L	M	L	L	L	L	L
Safety																			
(2-9) Guard Rail Upgrades	L	M	M	L	L	L	M	L	L	H	M	L	L	L	L	M	L	L	L
(2-10) Bridge Rail Upgrades	L	L	L	M	L	L	M	L	L	H	M	L	L	L	L	M	L	L	L
Reconstruction																			
(2-11) New/Reconstruction	M/H	H	H	H	H	H	H	M	L	H	H	L	L	L	L	H	M	M	M

Project Environmental Matrix 2
Permit Probabilitiy for Interstate Interchange Areas
Figure 240-3

⇩ Project Type / Permit or Approval ⇨	Section 404 Individual Permits	Section 404 Nationwide Permits (NWP)	Water Quality 401 Certification	Coastal Zone Management (CZM) Certification(2)	Threatened and Endangered Species	Hydraulic Project Approval (HPA)	Shoreline Substantial Development Permit(3)	Flood Plain Development Permit	Aquatic Resource Use Authorization	NPDES Municipal Stormwater Permit	NPDES Stormwater Construction Permit	NPDES Industrial Discharge Permit	State Waste Discharge (SWD) Permit(4)	Section 9 Bridge Permit(5)	Section 10 Permit(6)	Section 106	Section 4(f) &(F)	Critical/Sensitive Areas Ordinances(7)	Noise Permit
Preservation																			
Roadway																			
(3-1) Non-Interstate Freeway	L	L	L	L	L	L	M	L	L	H	L	L	L	L	L	L	L	L	M
(3-2) HMA/PCCP/BST Overlays	L	L	L	L	L	L	M	L	L	H	L	L	L	L	L	L	L	L	M
(3-3) Replace HMA w/ PCCP at I/S	L	L	L	L	L	L	M	L	L	H	L	L	L	L	L	L	L	L	M
Structures																			
(3-4) Bridge Replacement	H	H	H	H	H		H	H	M	H	H	L	L	M	M	M	M	M	L
(3-5) Bridge Deck Rehab.	M	L	L	H	M	M	H	L	L	H	L	L	L	M	L	M	L	L	M
(3-5a) Bridge Scour	M	H	H	H	H	H	H	L	M	L	L	L	L	M	M	M	L	H	L
(3-5b) Steel Bridge Painting	L	L	H	H	M	H	L	L	L	L	L	H	L	M	L	L	L	L	L
(3-5c) Bridge Seismic Retrofit	L	M	M	M	M	H	L	L	L	L	L	L	L	M	L	L	L	L	L
(3-5d) Special Bridge Repair	L	M	M	M	M	M	L	L	L	L	L	L	L	M	L	L	L	L	M
Improvements																			
(3-6) Non-Interstate Freeway	M/H	H	H	H	M/H	H	H	M	M	H	H	L	L	L	L	M	M	M	M**
(3-7) Urban	M/H	H	H	H	M/H	H	H	M	M	H	H	L	L	L	L	M	M	M	M**
(3-8) Rural	M	H	H	L	M	M	M	M	L	H	M	L	L	L	L	M	L	L	L
(3-9) HOV	M	M	M	L	M	M	M	M	L	H	M	L	L	L	L	M	L	L	M
(3-10) Bike/Ped. Connectivity	M	H	H	L	M	M	M	M	L	H	M	L	L	L	L	M	L	L	L
Safety																			
(3-11) Non-Interstate Freeway	L	L	L	L	L	M	M	M	L	H	M	L	L	L	L	M	L	L	L
(3-12) Intersection	L	L	L	L	L	L	L	L	L	H	M	L	L	L	L	M	L	L	L
(3-13) Corridor	L	L	L	L	L	M	M	M	L	H	M	L	L	L	L	M	L	L	L
(3-14) Median Barrier	L	M	M	L	L	L	L	L	L	H	M	L	L	L	L	M	L	L	L
(3-15) Guardrail Upgrades	L	M	M	L	L	L	M	L	L	H	M	L	L	L	L	M	L	L	L
(3-16) Bridge Rail Upgrades	L	L	L	M	L	L	M	L	L	H	M	L	L	L	L	M	L	L	L
(3-17) Risk: Roadside	L	H	H	L	L	L	M	M	L	H	M	L	L	L	L	M	L	L	L
(3-18) Risk: Sight Distance	L	L	L	L	L	L	M	M	L	H	M	L	L	L	L	M	L	L	L
(3-19) Risk: Roadway Width	L	H	H	L	L	M	M	M	L	H	M	L	L	L	L	M	L	L	L
(3-20) Risk: Realignment	M	H	H	L	M	M	M	M	L	H	M	L	L	L	L	M	L	L	L
Economic Development																			
(3-21) Freight and Goods (Frost Free)	M	H	H	M	M	M	M	M	L	H	H	L	L	L	L	M	M	M	M
(3-22) Four-Lane Trunk System	M	H	H	M	M	M	M	M	M	H	H	L	L	L	L	H	H	H	M
(3-23) Rest Areas (New)	M	H	H	L	M	M	M	L	L	H	H	L	M	L	L	H	H	H	L
(3-24) Bridge Restrictions	M	H	H	H	M	L	M	L	L	H	L	L	L	L	L	L	L	L	M
(3-25) Bike Routes (Shldrs)	L	M	M	L	L	M	M	M	L	H	M	L	L	L	L	M	L	L	L

Project Environmemtal Matrix 3
Permit Probability for NHS Routes Non-Interstate (Main Line)
Figure 240-4

⇩ Project Type / Permit or Approval ⇨	Section 404 Individual Permits	Section 404 Nationwide Permits (NWP)	Water Quality 401 Certification(1)	Coastal Zone Management (CZM) Certification(2)	Threatened and Endangered Species	Hydraulic Project Approval (HPA)	Shoreline Substantial Development Permit	Flood Plain Development Permit	Aquatic Resource Use Authorization	NPDES Municipal Stormwater Permit	NPDES Stormwater Construction Permit	NPDES Industrial Discharge Permit	State Waste Discharge (SWD) Permit(4)	Section 9 Bridge Permit(5)	Section 10 Permit	Section 106	Section 4(f) 6(F)	Critical/Sensitive Areas Ordinances(7)	Noise Permit
Preservation																			
Roadway																			
(4-1) Non-Interstate Freeway	L	L	L	L	L	L	L	L	L	H	L	L	L	L	L	L	L	L	M
(4-2) HMA/PCCP/BST	L	L	L	L	L	L	L	L	L	H	L	L	L	L	L	L	L	L	M
Overlays Ramps	L	L	L	L	L	L	L	L	L	H	L	L	L	L	L	L	L	L	
Structures																			
(4-3) Bridge Replacement	M	H	H	M	L	L	M	M	L	H	H	L	L	L	L	M	L	L	M
(4-4) Bridge Deck Rehab.	M	L	L	H	M	M	H	L	L	H	L	L	L	M	L	M	L	L	L
(4-5) Steel Bridge Painting	L	L	H	H	M	H	L	L	L	L	L	H	L	M	L	L	L	L	L
(4-6) Bridge Seismic Retrofit	L	M	M	M	M	H	L	L	L	L	L	L	L	M	L	L	L	L	L
Improvements																			
Mobility																			
(4-6) Non-Interstate Freeway	M/H	H	H	H	M/H	H	H	M	M	H	H	L	L	L	L	M	M	M	M**
(4-7) Urban	M/H	H	H	H	M/H	H	H	M	M	H	H	L	L	L	L	M	M	M	M**
(4-7) Rural	M	H	H	L	L	L	L	M	L	H	M	L	L	L	L	M	L	L	L
(4-8) HOV By Pass	M	H	H	L	L	L	L	M	L	H	M	L	L	L	L	M	L	L	M
(4-9) Bike/Ped. Connectivity	M	H	H	L	L	L	L	M	L	H	M	L	L	L	L	M	L	L	L
Safety																			
(4-10) Non-Interstate Freeway	L	L	L	L	L	L	L	M	L	H	M	L	L	L	L	M	L	L	L
(4-11) At Grade	L	L	L	L	L	L	L	L	L	H	M	L	L	L	L	M	L	L	L
(4-12) Intersection	L	L	L	L	L	L	L	L	L	H	M	L	L	L	L	M	L	L	L
(4-13) Guardrail Upgrades	L	M	M	L	L	L	L	L	L	H	M	L	L	L	L	M	L	L	L
(4-14) Bridge Rail Upgrades	L	L	L	L	L	L	L	L	L	H	M	L	L	L	L	M	L	L	L
(4-15) Risk: Roadside	L	H	H	L	L	L	L	M	L	H	M	L	L	L	L	M	L	L	L
(4-16) Risk: Sight Distance	L	L	L	L	L	L	L	M	L	H	M	L	L	L	L	M	L	L	L
(4-17) Risk: Roadway Width	L	H	H	L	L	L	L	M	L	H	M	L	L	L	L	M	L	L	L
(4-18) Risk: Realignment	M	H	H	L	L	L	L	M	L	H	M	L	L	L	L	M	L	L	L
Economic Development																			
(4-19) Four-Lane Trunk System	M	H	H	M	M	M	M	M	M	H	H	L	L	L	L	H	H	H	M

Project Environmental Matrix 4
Interchange Areas, NHS (Except Interstate) and Non-NHS
Figure 240-5

⇩ Project Type / Permit or Approval ⇨	Section 404 Individual Permits	Section 404 Nationwide Permits (NWP)	Water Quality 401 Certification[1]	Coastal Zone Management (CZM) Certification[2]	Threatened and Endangered Species	Hydraulic Project Approval (HPA)	Shoreline Substantial Development Permit	Flood Plain Development Permit	Aquatic Resource Use Authorization	NPDES Municipal Stormwater Permit	NPDES Stormwater Construction Permit	NPDES Industrial Discharge Permit	State Waste Discharge (SWD) Permit[4]	Section 9 Bridge Permit[5]	Section 10 Permit	Section 106	Section 4(f) 6(F)	Critical/Sensitive Areas Ordinances[7]	Noise Permit
Roadway																			
(5-1) HMA/PCCP	L	L	L	L	L	L	M	L	L	H	L	L	L	L	L	L	L	L	M
(5-2) BST	L	L	L	L	L	L	M	L	L	H	L	L	L	L	L	L	L	L	M
(5-3) BST Routes/Basic Safety	L	L	L	L	L	L	M	L	L	H	L	L	L	L	L	L	L	L	M
(5-4) Replace HMA with PCCP at I/S	L	L	L	L	L	L	M	L	L	H	L	L	L	L	L	L	L	L	
Structures																			
(5-5) Bridge Replacement	H	H	H	H	H	H	H	H	M	H	H	L	L	M	M	M	M	M	M
(5-6) Bridge Repl. (Multilane)	H	H	H	H	H	H	H	H	M	H	H	L	L	M	M	M	M	M	M
(5-7) Bridge Deck Rehab	M	L	L	H	M	M	H	L	L	H	L	L	L	M	L	M	L	L	M
(5-7a) Bridge Scour Countermeasures	M	H	H	H	H	H	H	L	M	L	L	L	L	M	M	M	L	H	L
(5-7b) Steel Bridge Painting	L	L	H	H	M	H	L	L	L	L	L	H	L	M	L	L	L	L	L
(5-7c) Bridge Seismic Retrofit	L	M	M	M	M	H	L	L	L	L	L	L	L	M	L	L	L	L	L
(5-7d) Special Bridge Repair	L	M	M	M	M	M	L	L	L	L	L	L	L	M	L	L	L	L	M
Improvements																			
(5-8) Non-Interstate Freeway	H	H	H	M/H	H	H	M	M	H	H	L	L	L	L	M	M	M	M	M**
(5-9) Urban	H	H	H	M/H	H	H	M	M	H	H	L	L	L	L	M	M	M	M	M**
(5-10) Rural	M	H	H	L	M	M	M	M	L	H	M	L	L	L	L	M	L	L	L
(5-11) HOV	M	M	M	L	M	M	M	M	L	H	M	L	L	L	L	M	L	L	M
(5-12) Bike/Ped. Connectivity	M	M	H	L	M	M	M	M	L	H	M	L	L	L	L	M	L	L	L
Safety																			
(5-13) Non-Interstate Freeway	L	L	L	L	L	M	M	M	L	H	M	L	L	L	L	M	L	L	L
(5-14) Intersection	L	L	L	L	L	L	L	L	L	H	M	L	L	L	L	M	L	L	L
(5-15) Corridor	L	L	L	L	L	M	M	M	L	H	M	L	L	L	L	M	L	L	L
(5-16) Median Barrier	L	M	M	L	L	L	L	L	L	H	M	L	L	L	L	M	L	L	L
(5-17) Guardrail Upgrades	L	M	M	L	L	L	M	L	L	H	M	L	L	L	L	M	L	L	L
(5-18) Bridge Rail Upgrades	L	L	L	M	L	L	M	L	L	H	M	L	L	L	L	M	L	L	L
(5-19) Risk: Roadside	L	H	H	L	L	L	M	M	L	H	M	L	L	L	L	M	L	L	L
(5-20) Risk: Sight Distance	L	L	L	L	L	L	M	M	L	H	M	L	L	L	L	M	L	L	L
(5-21) Risk: Roadway Width	L	H	H	L	L	M	M	M	L	H	M	L	L	L	L	M	L	L	L
(5-22) Risk: Realignment	M	H	H	L	M	M	M	M	L	H	M	L	L	L	L	M	L	L	L
Economic Development																			
(5-23) Freight and Goods (Frost Free)	M	H	H	M	M	M	M	M	L	H	H	L	L	L	L	M	M	M	M
(5-24) Rest Areas (New)	M	H	H	M	M	M	M	L	L	H	H	L	M	L	L	H	H	H	L
(5-25) Bridge Restrictions	M	H	H	H	M	L	M	L	L	H	L	L	L	L	L	L	L	L	M
(5-26) Bike Routes (Shldrs)	L	M	M	L	L	M	M	M	L	H	M	L	L	L	L	M	L	L	L

Project Environmental Matrix 5
Non-NHS Routes (Main Line)
Figure 240-6

NOTES

For Figures 240-2 through 240-6.

For main line projects on the Interstate, National Highway System main line (except Interstate), or non-National Highway System, all bridgework is assumed to be over water. For interchange projects on the Interstate and non-Interstate, all bridgework is assumed to be over roads. (See Chapter 325.)

NEPA/SEPA Endnotes

(*) Programmatic permits may apply

(**) Night work may require variance

(***) NEPA/SEPA compliance is required on all projects. The level of documentation will correspond to the complexity of the project and the potential environmental impacts anticipated. (See region or HQ environmental staff.)

Section 404 IP Endnotes

L= Low probability assumes the work is covered by an NWP.

M= Medium probability assumes the potential for impacts beyond the thresholds for an NWP.

H= High probability assumes a likelihood for impacts beyond the thresholds for an NWP.

Section 404 NWP Endnotes

L= Low probability assumes no work and/or fill below the OHWM or wetlands in waters of the US.

M= Medium probability assumes potential for work and/or fill below the OHWM in waters of the US and/or minimal wetland fill.

H= High probability assumes likelihood for work and/or fill in waters of the U.S. below the OHWM or wetland fills below 1/3 acre (tidal) or 1/2 acre (non-tidal).

Section 401 Endnotes

(1) Parallels probability of Section 404 IP/NWP. Includes reference to Corps/Ecology/Tribes Regional General Conditions.

CZM Endnotes

(2) Parallels probability of Section 401 within 15 coastal counties only and involving waters of the state subject to Shoreline Management Act.

ESA Endnotes

L= Low probability assumes either applicable programmatic BA or individual BA and No Effect Determination.

M= Medium probability assumes either applicable programmatic or individual BA and Not Likely to Adversely Effect Determination.

H= High probability assumes either applicable programmatic or individual BA and adverse effect determination (Biological Opinion).

HPA Endnotes

L= Low probability assumes no work within or over waters of the state subject to HPA.

M= Medium probability assumes potential for limited work within or over waters of the state.

H= High probability assumes likelihood for work within or over waters of the state.

Shoreline Endnotes

L= Low probability assumes no work within shorelines of the state.

M= Medium probability assumes potential for work within shorelines of the state.

H= High probability assumes likelihood for work within shorelines of the state.

Endnotes for Project Environmental Matrices

Figure 240-7a

Floodplain Endnotes

L= Low probability assumes no fill in the 100-year floodplain.
M= Medium probability assumes potential for fill in the 100-year floodplain.
H= High probability assumes likelihood for fill in the 100-year floodplain.

Aquatic Resource Use Authorization Endnotes (DNR)

L= Low probability assumes no new structures or use of aquatic lands.
(“Use” is subject to interpretation by DNR.)
M= Medium probability assumes potential for new structures or use of aquatic lands.
H= High probability assumes likelihood for new structures or use of aquatic lands.
May need to define USE and include Easement over Navigable Water.

Section 402 NPDES Municipal Stormwater General Permit Endnotes

(3) Applies to construction, operation, and maintenance activities in four watersheds - Island/ Snohomish, Cedar/Green, South Puget Sound, and Columbia Gorge.
L= Low probability assumes project exempt from NPDES Municipal Stormwater Permit.
H= High probability assumes project subject to NPDES Municipal Stormwater Permit.

Section 402 NPDES Stormwater Construction General Permit Endnotes

L= Low probability assumes ground disturbance of less that one acre.
M= Medium probability assumes ground disturbance of one acre or more.
H= High probability assumes likelihood of ground disturbance of one acre or more.

Section 402 NPDES Industrial Discharge General Permit Endnotes

L= Low probability assumes no bridge or ferry terminal washing over waters of the state.
M= Medium probability assumes potential for bridge or ferry terminal washing over waters of the state.
H= High probability assumes likelihood for bridge or ferry terminal washing over waters of the state.

State Waste Discharge Permit Endnotes

(4) Applies to discharges of commercial or industrial wastewater into waters of the state - does not cover stormwater discharges under NPDES program.
L= Low probability assumes SWD permit does not apply.
M= Medium probability assumes potential for SWD permit.

Section 9 Bridge Permit Endnotes

(5) Applies to work on bridges across navigable waters of the U.S.
L= Low probability assumes no bridgework.
M= Medium probability assumes potential for work on a bridge across navigable water.
H= High probability assumes likelihood for work on a bridge across navigable water.

Section 10 Permit Endnotes

(6) Applies to obstruction, alteration, or improvement of navigable waters of the U.S.
L= Low probability assumes no obstructions, alterations, or improvements to navigable waters.
M= Medium probability assumes potential for obstructions, alterations, or improvements to navigable waters.
H= High probability assumes likelihood for obstructions, alterations, or improvements to navigable waters.

Endnotes for Project Environmental Matrices
Figure 240-7b

Section 106 Endnotes

L= Low probability assumes no federal nexus and/or activities exempted per the statewide Programmatic Agreement on Section 106 signed by FHWA, WSDOT, OAHP and ACHP.

M= Medium probability assumes a federal nexus; therefore, Section 106 federal regulations apply.

H= High probability assumes a federal nexus and/or the likelihood for discovery of historic or culturally significant artifacts. See 36 CFR part 800, *Environmental Procedures Manual*, (Current DOT Policy and the Section 106 Programmatic Agreement).

Section 4(f)/6(f) Endnotes

L= Low probability assumes no use of or acquisition of new right-of-way.

M= Medium probability assumes potential use of or acquiring of new right of way.

H= High probability assumes likelihood for use of or acquiring of new right of way.
Review Triggers: http://www.wsdot.wa.gov/environment/compliance/Section4f_guidance.htm

Critical/Sensitive Areas Endnotes

(7) The mechanism for critical/sensitive areas review varies by jurisdiction.

L= Low probability assumes no work inside or outside of right of way in critical/sensitive areas.

M= Medium probability assumes potential for work inside or outside of right of way in critical/sensitive areas.

H= High probability assumes likelihood for work inside or outside of right of way in critical/sensitive areas.

Noise Variance Endnotes

L= Low probability assumes no night work.

M= Medium probability assumes potential for night work.

H= High probability assumes likelihood for night work.

Endnotes for Project Environmental Matrices
Figure 240-7c

240.04 Design Process and Permit Interaction

Environmental permits require information prepared during the design phase to demonstrate compliance with environmental rules, regulations, and policies. To avoid delays in project delivery, it is necessary for the designer to understand and anticipate this exchange of information. The timing of this exchange often affects design schedules, while the permit requirements can affect the design itself. In complex cases, the negotiations over permit conditions can result in iterative designs as issues are raised and resolved.

The permit process begins well in advance of the actual permit application. For some permits, WSDOT has already negotiated permit conditions through the use of programmatic and general permits. These permits typically apply to repetitive, relatively simple projects and the permit conditions apply regardless of the actual facts of the project type. For complex projects, the negotiations with permit agencies often begin during the environmental documentation phase for compliance with NEPA and SEPA. The mitigation measures developed for the NEPA/SEPA documents are captured as permit conditions on the subsequent permits.

For many other project types, the permit process begins during the design phase. This section illustrates the interaction between design and permitting for two relatively uncomplicated projects. Figures 240-8 and 240-9 illustrate project timelines for two project types and the interaction of typical permits for those project types. The project types are an overlay project and a channelization project. The figures illustrate the level of effort over time for both design components and environmental permits.

The overlay project assumes that only an NPDES Municipal Stormwater General Permit is required. Compliance with this permit is through application of WSDOT's *Highway Runoff Manual,* M 31-16 and the implementation of WSDOT's 1997 *Stormwater Management Plan*. The possibility for a noise variance exists because of the potential for night work.

The channelization project assumes minor amounts of new right of way are required. Because roadside ditches are often at the edge of the right of way, it was assumed that the potential for impacting wetlands exists. Usually the amount of fill is minor and the project may qualify for a Corps of Engineers Section 404 Nationwide Permit. A wetland mitigation plan is required to meet permit requirements, and the plan's elements have the potential to affect design, including stormwater facilities.

The interaction of design and permitting increases in complexity as the project type becomes more complex. More detailed analysis of environmental permits and their requirements is available in the *Environmental Procedures Manual* and through consultation with region and HQ environmental staff.

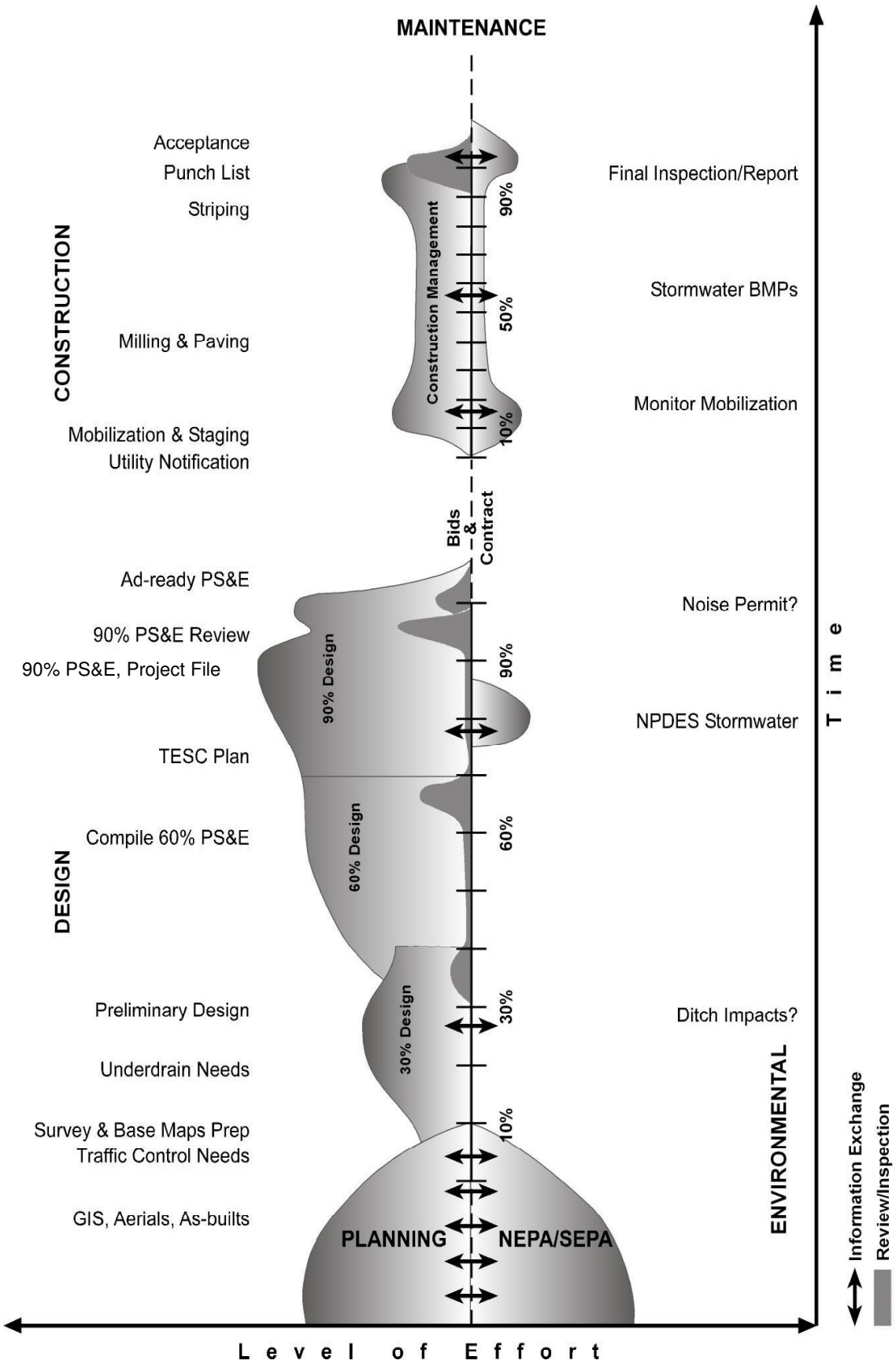

Environmental Interrelationship: HMA/PCCP/BST Main Line Overlay
Figure 240-8

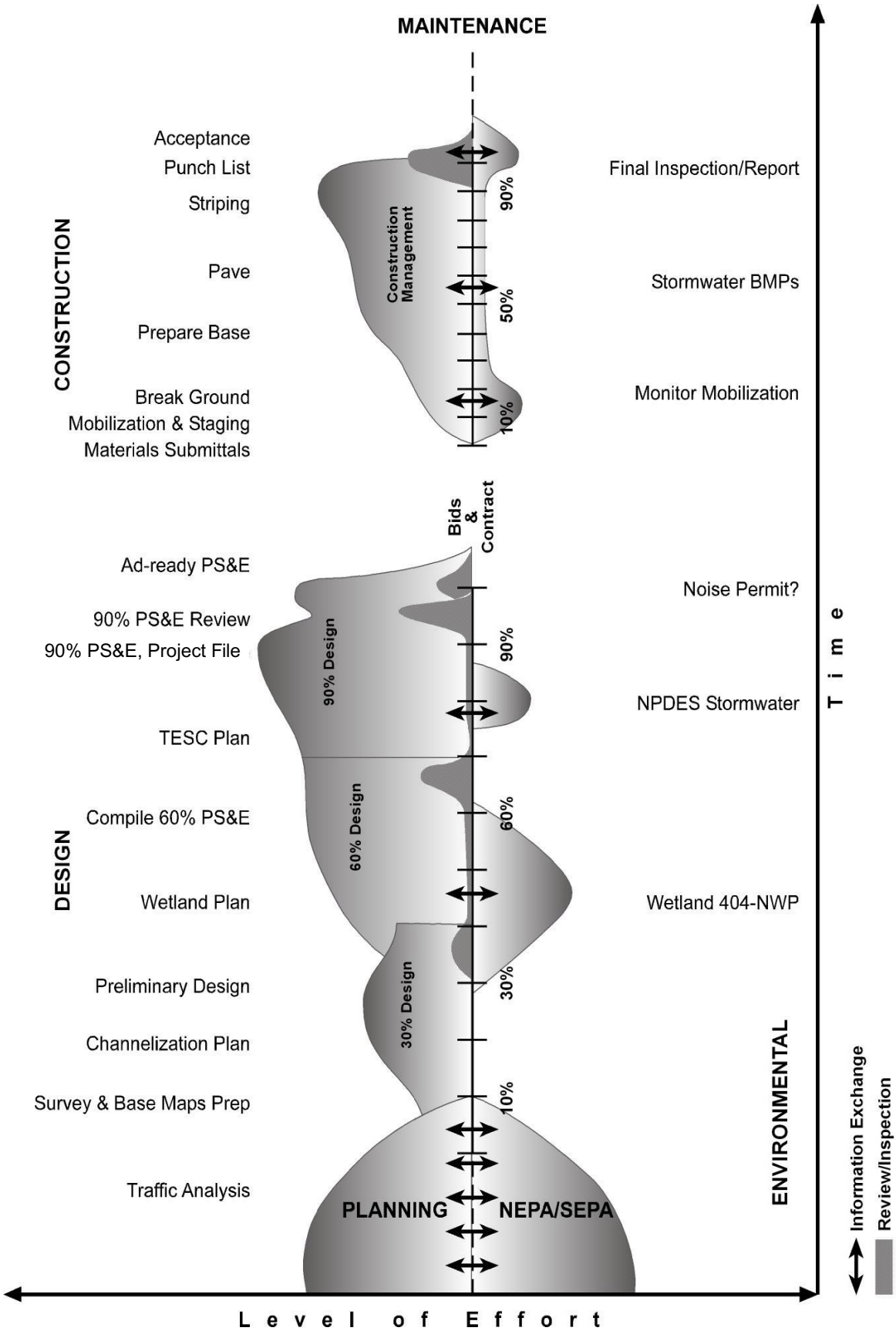

Environmental Interrelationship: Safety Corridor Channelization Main Line
Figure 240-9

⇩ Project Type															Bridges (11)				Intersections			Barriers		
Design Elements ⇨	Horiz. Align.	Vert. Align.	Lane Width	Shldr Width	Lane Tran-sition	Median Width	Cross Slope Lane	Cross Slope Shldr	Fill/ Ditch Slopes	Access (3)	Clear Zone (18)	Sign, Del., Illumin.	Basic Safety	Bike & Ped.	Lane Width	Shldr Width	Vertical Clear.	Structural Capacity	Turn Radii	Angle	I/S Sight Dist.	Term. & Trans. Section (12)	Std Run	Bridge Rail (19)
Preservation																								
Roadway																								
(5-1) HMA/PCCP												B	B	M			F				B	F	B	F
(5-2) BST																								
(5-3) BST Routes/Basic Safety												B	B								B	F	B	F
(5-4) Replace HMA with PCCP at I/S			EU/M	EU/M		DE/M	EU/M					B	B	M			F					F	B	F
Structures																								
(5-5) Bridge Replacement	M	F	M	M	F		M	M	M		F	F		F	F(2)	F(2)	F	F	M	M	F	F	F	F
(5-6) Bridge Repl. (Multilane)	F(2)	F(2)	F(2)	F(2)	F	F(2)	F(2)	F(2)	F(2)		F	F		F	F(2)	F(2)	F	F	F(2)	F(2)	F	F	F	F
(5-7) Bridge Deck Rehab												B	B	M								F(6)	F(22)	F
Improvements (16)																								
Mobility																								
(5-8) Urban (Multilane)	F(2)	F(2)	F(2)	F(2)	F	F(2)	F(2)	F(2)	(2)	F	F	F		F	F(2)	F(2)	F	F	EU/F	EU/F	F	F	F	F
(5-9) Urban	M	M	M	M	F		M	M	M	F	F	F		F	M	M	F	F	EU/M	EU/M	F	F	F	F
(5-10) Rural	M	M	M	M	F	M	M	M	M	F	F	F		F	M	M	F	F	EU/M	EU/M	F	F	F	F
(5-11) HOV	M	M	M	M	F	M	M	M	M	F	F	F		F	M	M	F	F	EU/M	EU/M	F	F	F	F
(5-12) Bike/Ped. Connectivity	(5)	(5)	(5)	(5)	(5)	(5)	(5)	(5)	(5)	(5)	(5)	(5)		F	(5)	(5)	(5)	(5)	(5)	(5)	(5)	(5)	(5)	(5)
Safety																								
(5-13) Non-Interstate Freeway	F(2)	F(2)	F(2)	F(2)	F(2)	F(2)	F(2)	F(2)	F(2)	F	F	F		F	F(2)	F(2)	F		F(2)	F(2)	F	F	F	F
(5-14) Intersection (1)			M(4)	M(4)	F				M(4)	F	F	F		M					M(4)	M(4)	F	F	F	F
(5-15) Corridor (1)	M(4)	M(4)	M(4)	M(4)	F	M(4)	M(4)	M (4)	M(4)	F	F	F		M	M(4)	M(4)	F		M(4)	M(4)	F	F	F	F
(5-16) Median Barrier				DE/F																		F(20)	F(20)	
(5-17) Guardrail Upgrades				DE/F																		F	F(23)	
(5-18) Bridge Rail Upgrades																						F	F(22)	F
(5-19) Risk: Roadside									M(4)	EU/F	F	F										F	F	F
(5-20) Risk: Sight Distance	F/M(21)	F/M(21)	F/M(21)	F/M(21)					F/M(21)	F(21)	F(21)	F		F	F(21)	F(21)	F(21)		F/M(21)	F/M(21)	F(21)	F	F	F
(5-21) Risk: Roadway Width			F/M(21)	F/M(21)	F	F/M(21)	F/M(21)	F/M(21)	F/M(21)	F	F	F		F	F(21)	F(21)	F(21)		F/M(21)	F/M(21)	F(21)	F	F	F
(5-22) Risk: Realignment	F/M	F/M	F/M	F/M	F	F/M	F(2)	F(2)	F/M	F	F	F		F	F(21)	F(21)	F(21)		F/M(21)	F/M(21)	F(21)	F	F	F
Economic Development																								
(5-23) Freight & Goods (Frost Free) (8)	EU/M	EU/M	EU/M	EU/M	EU/F	EU/M	M	M	EU/M		F	B	B	EU/F(26)	DE/M	DE/M	F		EU/M	EU/M	EU/F	F	B	F
(5-24) Rest Areas (New)	F	F	F	F	F	F	F	F	F	F	F	F		F	F	F			F	F	F	F	F	F
(5-25) Bridge Restrictions	M	F	M	M	F	M	M	M	M		F	F		EU/F(26)	M	M	F	F	M	M	F	F	F	F
(5-26) Bike Routes (Shldrs)			EU/M	(7)	EU/F			EU/M	EU/M			B	B	F	EU/M	EU/M					B	F	B	EU/F

☐ Not Applicable
F Full design level. See Chapter 440.
M Modified design level. See Chapter 430.
F/M Full for freeways/Modified for nonfreeway
B Basic design level. See Chapter 410.
DE Design Exception
EU Evaluate Upgrade

(1) Collision Reduction (HAL, HAC, PAL), or Collision Prevention (At Grade Removal, Signalization & Channelization). Specific deficiencies that created the project must be upgraded to design level as stated in the matrix.
(2) Modified design level may apply based on a corridor or project analysis. See 325.03(5).
(3) If designated as L/A acquired in the Access Control Tracking System, limited access requirements apply. If not, managed access applies. See 325.03(5).
(4) Full design level may apply based on a corridor or project analysis. See 325.03(5).
(5) For bike/pedestrian design see Chapters 1020 and 1025.
(6) Applies only to bridge end terminals and transition sections.
(7) 4 ft minimum shoulders.
(8) If all weather structure can be achieved with spot digouts and overlay, modified design level applies to NHS highways and basic design level applies to non-NHS highways.
(11) See Chapter 1120.
(12) Impact attenuators are considered as terminals.
(16) For design elements not in the matrix headings, apply full design level as found in the applicable chapters and see 325.03(2).
(18) On managed access highways within the limits of incorporated cities and towns, City and County Design Standards apply to areas outside the curb or outside the paved shoulder where no curb exists.
(19) The funding sources for bridge rail are a function of the length of the bridge. Consult programming personnel.
(20) Applies to median elements only.
(21) Analyses required. See 325.03(5) for details.
(22) Upgrade barrier, if necessary, within 200 ft of the end of the bridge.
(23) See description of Guardrail Upgrades Project Type, 325.03(1) regarding length of need.
(26) Sidewalk ramps must be addressed for ADA compliance. See Chapter 1025.

Design Matrix 5
Main Line Non-NHS Routes
Figure 325-7

Chapter 340 Minor Operational Enhancement Projects

340.01 General
340.02 References
340.03 Definitions
340.04 Minor Operational Enhancement Matrix Procedures
340.05 Selecting a Minor Operational Enhancement Matrix
340.06 Project Type
340.07 Using a Minor Operational Enhancement Matrix
340.08 Project Approval
340.09 Documentation

340.01 General

This chapter complements Chapter 325 by providing guidance for development of minor operational enhancement projects. Do not use this chapter to develop preservation or improvement projects. Refer to Chapter 325 for guidance in development of preservation and improvement projects and also for projects initiated by local agencies or developers. The minor operational enhancement matrices contained in this chapter identify the design level(s) for a project, the associated approval level, and the documentation requirements for the most common minor operational enhancement projects and focus on the various elements of greatest concern during project development.

Minor enhancement projects are categorized as low-cost enhancements, to improve the operational safety and efficiency of the highway system. These enhancements are most often installed by state forces through work orders, but may be accomplished through: a stand-alone state contract funded entirely through the Q Program, a Q Program funded bid item within a larger improvement project, a change order to an existing state contract, or agreements with local agencies. An important characteristic of these projects is the ability to quickly develop and implement them without a cumbersome approval process. Balanced with that is a need to apply consistency in design policies and guidelines in the development and approval processes. Therefore, the intent of this chapter is to clarify the design guidelines and documentation requirements for minor operational enhancement projects without unduly impeding the process.

The objective of the Q Program is to maximize highway transportation system safety and efficiency through a statewide program focused on the WSDOT business function for "Traffic Operations." It is the smallest of the four major highway programs that comprise the Highway System Plan (i.e. Improvement, Maintenance, Preservation, and Traffic Operations). Elements within the Q Program include: Q1 – Traffic Operations Program Management, Q2 – Traffic Operations Program Operations, and Q3 - Special Advanced Technology Projects. This chapter is intended to guide the development of projects in the Low Cost Enhancements subcategory within the Q2 program. Large capital improvement projects developed for the Q3 subprogram are beyond the scope and intent of this chapter. Normally, these projects are developed using *Design Manual* guidelines for Preservation and Improvement Program projects. Consult the Headquarters Traffic Office for guidance when designing Q3 subprogram projects.

The minor operational enhancement matrices consisting of three tables are identified by route type. One of the matrices applies to Interstate and NHS freeways, one applies to NHS Non-freeway routes, and the third matrix applies to non-NHS routes.

340.02 References

Revised Code of Washington (RCW) 47.28.030, Contracts — State forces — Monetary limits —Small businesses, minority, and women contractors — Rules.

Chart of Accounts, M 13-02, WSDOT

340.03 Definitions

The **National Highway System (NHS)** See Chapter 325 for definition and a list of specific routes on the NHS.

The term **freeway** applies to multilane, divided highways with full access control.

The **minor operational enhancement projects** usually originate from the Q2 component of the Q Program and are quick responses to implement low cost improvements.

Projects are typically narrow in scope, and focus on improvements to traffic operations, and modifications to traffic control devices. Guidance on the type of work included in the Q subprograms is in the *Chart of Accounts* (M 13-02).

(1) Project Types

Regulatory projects include actions undertaken to manage or regulate traffic conflict, movements, and use of the roadway. Potential projects in this category include revisions to speed limits, parking restrictions, turn restrictions, truck restrictions, signal operations, unsignalized intersection control, intersection lane use control, ramp meters, no passing zones, crosswalks, special traffic control schemes, and lane use restrictions.

Driver guidance projects are actions to improve driver guidance, clarify options, or reduce hazard in the roadway setting. Potential projects include revisions to, informational signs, warning signs, lighting and supplemental illumination, supplemental delineation, glare screen, signals, roadside guidance, and intelligent transportation systems (ITS).

Pavement widening projects are expansion of the roadway surface for vehicular use and may involve earthwork, drainage, and paving elements. Consult with the regional bicycle/pedestrian coordinator to ensure that the concerns of bicyclists and pedestrians are given adequate consideration. These projects are considered alterations of the roadway and must address Americans with Disabilities Act (ADA) accessibility for pedestrians. See Chapter 1025 for guidance on pedestrian facilities. Potential projects are:

- Turn lane — Addition of a new channelized turn bay at an intersection.
- Pullout — Pavement widening to provide auxiliary highway uses including transit stops, Washington State Patrol (WSP) enforcement pullouts, snow chain-up areas, and maintenance vehicle turnouts.
- Expansion — Widen at intersection corners, lengthen existing channelized turn bay, widening shoulders, and flattening approach taper. This type of work is not anticipated for main line sections on Interstate freeways.
- Median crossover — Restricted-use median crossover on separated highways for emergency or maintenance use. See Chapter 960 for design of median crossovers.

Rechannelize existing pavement projects alter the use of the roadway without additional widening. These projects may add, delete, or modify channelization features, and may include reduction of existing shoulder or lane widths. Consult with the regional bicycle/pedestrian coordinator to ensure that the concerns of bicyclists and pedestrians are given adequate consideration. Projects that change the traffic configuration by reducing shoulders to add turn lanes are considered an alteration of the existing roadway and have the same requirements for preservation projects as it relates to pedestrian facilities for ADA accessibility. See Chapter 1025 for guidance on pedestrian facilities.

Potential projects are:

- Pavement markings — Develop added storage, additional lanes, or altered lane alignment. This work may modify tapers or radii, modify painted islands, channelize bicycle lanes, preferential-use lanes or shoulders.
- Raised channelization — New or altered raised curbing to channelization islands to enhance guidance, curtail violation or misuse, or introduce access control.
- Left-Turn Channelization (2-Lane Highways) – Restriping two-lane highways with a minimum pavement width of 39 feet, to provide left-turn channelization at existing intersections. Restripe to provide a minimum of 11-foot lanes and 3-foot shoulders. Ensure that the pavement is structurally adequate for the anticipated traffic loads. Within this configuration at T-Intersections, a reduced

length refuge lane may be provided for traffic entering the main line from the intersecting roadway. See Figure 340-6 for minimum dimensional characteristics of the refuge lane.

Nonmotorized facilities projects add adjacent roadside features for bicycle or pedestrian use. Involve the regional bicycle/pedestrian coordinator in the project development process.

Potential projects are:

- Sidewalk — Installation of sidewalks, which might involve preserving existing shoulder, or converting some portion of existing shoulder for use as a new sidewalk.
- Walkway — Adds to the existing roadway's overall width to provide a wider walkable shoulder.
- Separated Trails — Class 1 separated bike lane or pedestrian paths on independent alignment or parallel to the highway.
- Spot Improvement — Installation of ADA sidewalk curb cuts, new pedestrian landings, sidewalk bulbouts at intersections, or new or revised trailhead features.

Roadside projects are modifications to roadside features for safety purposes. Potential projects are:

- Cross section — Altering roadway cross sections to address clear zone hazard or sight distance concern such as slope flattening, recontouring a ditch, closing a ditch with culvert, or removal of hazard.
- Protection — Installation of hazard protection for clear zone mitigation including guardrail, barrier, and impact attenuator.
- New object — Placement of new hardware or fixed object within clear zone unable to meet breakaway criteria.

(2) Design Elements

The following elements are shown on the minor operational enhancement matrices. If full design level applies see the chapters listed below. If modified design level applies, see Chapter 430.

Sight Distance refers to any combination of horizontal and vertical stopping sight distance, decision sight distance, passing sight distance, and intersection sight distance. See Chapters 650 and 910 for definitions and guidance.

Lane Width See Chapter 325 for definition.

Lane Transition See Chapter 325 for definition.

Shoulder Width See Chapter 325 for definition.

Fill/Ditch Slope See Chapter 325 for definition.

Clear Zone See Chapter 325 for definition.

Ramp Sight Distance refers to any combination of horizontal and vertical stopping sight distance, decision sight distance, and intersection sight distance. See Chapters 650 and 910 for definitions and guidance.

Ramp Lane Width is the lane width for ramp alignments. See Lane Width definition in Chapter 325.

Ramp Lane Transition is the lane transition applied to a ramp alignment. See definition for Lane Transition in Chapter 325. Also see Chapter 940.

Ramp Shoulder Width is the shoulder width for a ramp alignment. See Shoulder Width definition in Chapter 325.

Ramp Fill/Ditch Slopes is the fill/ditch slope along a ramp alignment. See Fill/Ditch Slope definition in Chapter 325.

Ramp Clear Zone is the clear zone along a ramp alignment. See Clear Zone definition in Chapter 325.

Ramp Terminals or Intersection Turn Radii See Chapter 910 for definition.

Ramp Terminals or Intersection Angle See Chapter 910 for definition.

Ramp Terminals or Intersection Sight Distance See Chapter 910 for definition.

Pedestrian and Bike refers to the facilities along a route for accommodation of pedestrians and/or bicycles. See Chapter 1020 for bicycles and Chapter 1025 for pedestrians.

Crossroads at Ramps Lane Width is the lane width on a crossing alignment intersected by a ramp. See Lane Width definition in Chapter 325.

Crossroads at Ramps Shoulder Width is the shoulder width on a crossing alignment intersected by a ramp. See Shoulder Width definition in Chapter 325.

Crossroads at Ramps Pedestrian and Bike refers to the facilities on a crossing alignment intersected by a ramp, for accommodation of pedestrians and/or bicycles. See Pedestrian and Bike definition.

Crossroads at Ramps Fill/Ditch Slopes is the fill/ditch slope along a crossroad intersected by a ramp. See Fill/Ditch Slope definition in Chapter 325.

Crossroads at Ramps Clear Zone is the clear zone along a crossroad intersected by a ramp. See Clear Zone definition in Chapter 325.

Barriers Terminal and Transition Section See Chapter 325 for definition.

Barriers Standard Run See Chapter 325 for definition.

340.04 Minor Operational Enhancement Matrix Procedures

During project definition and design, the following steps are used to select and apply the appropriate minor operational enhancement matrix. Each step is further explained in this chapter.

- *Select a minor operational enhancement matrix* by identifying the route: Interstate/NHS Freeway, NHS non-freeway, or non-NHS.
- Within the minor operational enhancement matrix, *select the row* by the type of work.
- Use the minor operational enhancement matrix to *determine the documentation and approval levels for the various design elements* in the project. Apply the appropriate design levels and document the design decisions as required by this chapter and Chapter 330.

340.05 Selecting a Minor Operational Enhancement Matrix

Selection of a minor operational enhancement matrix is based on highway system (Interstate/NHS Freeway, NHS non-freeway, non-NHS). (See Figure 340-1.) Figures 325-2a and 2b provide a list of the NHS and the Interstate routes in Washington. The minor operational enhancement matrices are shown in Figures 340-2 through 340-4. Follow *Design Manual* guidance for all projects except as noted in the minor operational enhancement matrices.

Route	Project	
	Freeway	Non-freeway
Interstate	Matrix 1	
NHS	Matrix 1	Matrix 2
Non-NHS	Matrix 1	Matrix 3

Minor Operational Enhancement Matrix Selection Guide
Figure 340-1

340.06 Project Type

Row selection in the design matrices is based on project type or type of work. See 340.03(1). For projects not listed in the matrices, consult the Headquarters Traffic Office and the Headquarters Design Office.

Some projects might include work from several project types. In such cases, identify the design and approval level for each project element. In all cases, select the higher design level and approval level where overlaps are found.

340.07 Using a Minor Operational Enhancement Matrix

The column headings on a minor operational enhancement matrix are design elements. They are based on the following thirteen Federal Highway Administration (FHWA) controlling design criteria: design speed, lane width, shoulder width, bridge width, structural capacity, horizontal alignment, vertical alignment, grade, stopping sight distance, cross slope, superelevation, vertical clearance, and horizontal clearance. For the column headings, some of the controlling criteria are combined (for example design speed is part of horizontal and vertical alignment).

Unlike the design matrices described in Chapter 325, designers using a minor operational enhancement matrix are not required to inventory deficiencies for elements not improved by the minor enhancement project. Similarly, they are not required to justify existing deficiencies not addressed by minor enhancement projects. In the case where improvements to existing features surpass the existing condition but do not meet the design guidelines, Basic Documentation plus Supplemental Coordination (BD+) is required. See 340.09(1).

A **blank cell** on a minor operational enhancement matrix signifies that the design element is beyond the scope of the project and need not be addressed.

For work on ramps on Interstate or NHS freeway routes, there is a requirement to provide assurance of no adverse effect to main line flow. Provide FHWA a copy of the documentation providing assurance or process a deviation through FHWA if there is an adverse effect.

(1) Design Level

The minor operational enhancement matrices specify the appropriate design level for the various project elements. The design levels specified are Full and Modified.

Full design level (F) improves roadway geometrics, safety, and operational elements. See Chapter 440 and other applicable chapters for design guidance. Use the current traffic volume with Chapter 440 to evaluate design class for Q Program projects.

Modified design level (M) preserves and improves existing roadway geometrics, safety, and operational elements. See Chapter 430.

Design levels specified in a matrix cell are supplemented with notations for design variances.

(2) Design Variances

Design variances are information packages that justify the introduction of features that are not in accordance with design guidelines. Variances specified in minor operational enhancement project cells include: Design Justification, Level 2, Level 3, or Level 4. See 340.09 for details on documentation requirements.

340.08 Project Approval

Project approval for minor operational enhancement projects authorizes expenditures for the project. The State and/or Region's Traffic Engineer have the responsibility and authority to authorize all expenditures for Q2 Low Cost Enhancements. Delegation of design and/or expenditure approval authority for Q Program funded projects must be identified in writing from the appropriate Traffic Engineer to the person receiving the delegated authority. Such written delegation must identify the specific conditions for which approval authority has been delegated. Design approval authority for PS&E contracts cannot be delegated.

Mechanisms for project expenditure approval vary with the types of projects and the costs involved.

- **Minor-cost projects** are projects normally implemented by state forces directed through maintenance task orders, within the monetary limits established in RCW 47.28.030. Expenditure authority is granted by initialing the work order.
- **Mid-range projects** include: all contract change orders, local agency agreements, or Q Program bid items included in an Improvement or Preservation project, regardless of cost. Maintenance task orders exceeding the monetary limits established in RCW 47.28.030 are included in this category. Expenditure authority is granted by initialing the task order, change order, or agreement memo.
- **PS&E contracts** are stand-alone contracts funded through the Q Program for minor operational enhancement projects. A Design Summary/Approval memorandum must be prepared and signed by the region's Traffic Engineer to approve a project in this category. Figures 340-5a and 340-5b provide a template for the approval memo.

Project development decisions and approvals for "Regulatory" and for "Driver Guidance" projects reside within region or Headquarters Traffic Offices. Projects impacting roadway geometric features in the "Pavement Widening,"

"Rechannelizing Existing Pavement," "Non-motorized Facilities" or "Roadside" categories are developed jointly by the region's Traffic Office and the region's Project Development Office. Depending on the route type, the approval authority may involve the Assistant State Design Engineer and the FHWA.

340.09 Documentation

The minor operational enhancement matrices include a column that specifies the documentation levels for each project type listed. The documentation levels are categorized as Basic Documentation (BD) and Basic Documentation plus Supplemental Coordination (BD+).

In all cases, the documentation must outline the rationale for the project and include backup information sufficient to support the design decisions. Document the roadway configuration prior to implementation of a minor operational enhancement project. Documentation is to be retained in a permanent retrievable file at a central location in each region.

(1) Projects

Basic Documentation (BD) level applies to regulatory or driver guidance projects. Documentation consists of an unstructured compilation of materials sufficient to validate the designer's decisions. Materials may include: meeting notes, printed e-mails, record of phone conversations, copies of memos, correspondence, and backup data such as level of service modeling, accident data, and design drawings.

A single narrative outlining the decision-making process from start to finish is not required, provided that the materials retained in the file can be traced to a decision consistent with the project design. This level of documentation includes a requirement for inputting the project information into the TRaffic ACtion Tracking System (TRACTS) database at the conclusion of the project.

Basic Documentation plus Supplemental Coordination (BD+) level applies to all projects except regulatory or driver guidance projects. A more comprehensive evaluation of options and constraints is required for this documentation level. Documentation includes basic documentation with additional information describing coordination efforts with other WSDOT groups having a stake in the project. Document the coordination efforts with the following disciplines: Environmental, Hydraulics, Local Agencies and WSDOT Local Programs, Maintenance, Materials, Program Management, Real Estate Services, Urban Corridors, Utilities, and the general public. This level of documentation also includes a requirement for inputting the project information into the TRACTS database at the conclusion of the project.

(2) Design Deviations

Design Justification (DJ) is a written narrative summarizing the rationale for introduction of a feature that varies from the applicable *Design Manual* guidelines. Include in the narrative sufficient information to describe the problem, the constraints, and the trade-offs at a level of detail that provides a defendable professional judgment. DJs are not intended to have the same level of formality as the Level 2, 3, and 4 deviations. DJs may use written memos, e-mails, or documented discussions with the approving traffic authority. The region's Traffic Engineer has responsibility for approving Design Justifications. The DJ documentation must include the name and date of the approving authority. At the time the work order is approved, the region's Project Development Engineer and the Assistant State Design Engineer are to be sent informational copies of the Design Justification, to provide them an opportunity to communicate their concerns. Comment on the informational copy is not mandatory and progress toward project implementation does not wait on a response.

Level 2 documentation serves to justify a deviation to the specified design guidance. Within the document, summarize the project, the design guidelines, the proposed elements that vary from design guidelines, alternatives analyzed, constraints and impacts of each alternative, and the recommended alternative. Level 2 documentation requires joint approval of the region's Traffic Engineer and region's Project

Development Engineer. At the time the work order is approved, the Assistant State Design engineer is to be sent an informational copy of the Level 2 documentation to provide an opportunity to communicate concerns. Comment on the informational copy is not mandatory, and progress toward project implementation does not wait on a response.

Level 3 documentation requirements include the level 2 requirements, however the approval process is through the region's Traffic Engineer, and region's Project Development Engineer with final approval from the Assistant State Design Engineer.

Level 4 documentation requirements include the level 3 requirements, however the approval process is through region's Traffic Engineer, region's Project Development Engineer, and the Assistant State Design Engineer with final approval from the Federal Highway Administration on Interstate routes.

Level 2, 3, and 4 design deviation requests are intended to be stand-alone documentation describing the project, design criteria, proposed element(s), why the desired design level was not or can not be used, alternatives evaluated, and a request for approval. Include funding source(s), type of route, project limits, design classification, posted speed, current ADT, and percent truck traffic in the project description. Justification for the design deviation can include project costs, but must be supported by at least two of the following:

- Accident history or potential.
- Engineering judgment.
- Environmental issues.
- Route continuity (consistency with adjoining route sections).
- The project is an interim solution (covering a 4 to 6 year time horizon).

⇩ Project Type	Main Line						Ramps (1)						Ramp Terminals or Intersections			Crossroads at Ramps					Barriers All		Doc. Level
Design Elements ⇨	Sight Dist.	Lane Width	Lane Tran-sition	Shldr Width	Fill/ Ditch Slopes	Clear Zone	Sight Dist.	Lane Width	Lane Tran-sition	Shldr Width	Fill/ Ditch Slopes	Clear Zone	Turn Radii	Angle	Sight Dist.	Lane Width	Shldr Width	Ped & Bike	Fill/ Ditch Slopes	Clear Zone	Term. & Trans. Section	(2) Std Run	
Regulatory - (Traffic Office Authority)																							**BD**
Driver Guidance - (Traffic Office Authority)																							**BD**
Pavement Widening																							
(1-1Q) Turn Lane								F/DJ	F/DJ	F/DJ			M/DJ	M/DJ	F/DJ	M/DJ	M/DJ	F/DJ	M/DJ	F/DJ	F/3	F/3	BD+
(1-2Q) Pullout							F/DJ	F/DJ	F/DJ	F/DJ	F/DJ	F/DJ	M/DJ		F/DJ	M/DJ	M/DJ	F/DJ	M/DJ	F/DJ	F/3	F/3	BD+
(1-3Q) Expansion	F/3	F/4	F/3	F/4	F/3	F/3		F/DJ	F/DJ	F/DJ	F/DJ	F/DJ	M/DJ		F/DJ	M/DJ	M/DJ	F/DJ	M/DJ	F/DJ	F/3	F/3	BD+
(1-4Q) Median Crossover	F/3	F/4	F/3	F/4	F/3	F/3															F/3	F/3	BD+
Rechannelize Existing Pavement																							
(1-5Q) Pavement Markings	F/3	F/4	F/3	F/4		F/3	F/DJ	F/DJ	F/DJ	F/DJ		F/DJ	M/DJ	M/DJ	F/DJ	M/DJ	M/DJ	F/DJ		F/DJ	F/3	F/3	BD+
(1-6Q) Raised Channelization							F/DJ	F/DJ	F/DJ	F/DJ		F/DJ	M/DJ	M/DJ	F/DJ	M/DJ	M/DJ	F/DJ		F/DJ	F/3	F/3	BD+
(1-7Q) Left-Turn Channelization 2-Lane Hwys (3)																DJ	DJ	M					
Nonmotorized Facilities																							
(1-8Q) Sidewalk/Walkway													M/DJ	M/DJ	F/DJ	M/DJ	M/DJ	F/DJ	M/DJ	F/DJ	F/3	F/3	BD+
(1-9Q) Separated Trails																		F/DJ			F/3	F/3	BD+
(1-10Q) Spot Improvement													M/DJ	M/DJ	F/DJ	M/DJ	M/DJ	F/DJ		F/DJ			BD+
Roadside																							
(1-11Q) Cross Section	F/3				F/3	F/3	F/DJ				F/DJ	F/DJ			F/DJ				M/DJ	F/DJ	F/3	F/3	BD+
(1-12Q) Protection	F/3			F/4	F/3	F/3	F/DJ			F/DJ	F/DJ	F/DJ			F/DJ		M/DJ		M/DJ	F/DJ	F/3	F/3	BD+
(1-13Q) New Object	F/3					F/3	F/DJ					F/DJ			F/DJ					F/DJ	F/3	F/3	BD+

□ Not Applicable
F Full design level
M Modified design level. See Chapter 430.
DJ Design Justification required and Project Approval by region Traffic, with notification to Headquarters Design.
2 Deviation approval through the region's Traffic and Project Development Engineers, with notification to Headquarters Design.
3 Deviation approval through level 2 and the Assistant State Design Engineer.
4 Deviation approval through level 3, and FHWA on Interstate routes.
BD Basic Documentation required.
BD+ Basic Documentation plus supplemental coordination required.

If a project impacts any design element, the impacted elements are addressed. Elements not impacted, are not addressed.

For items not meeting the design level provided in the matrix, justification or deviation is required and is processed through the designated approval level, DJ, 2, 3, or 4

For at-grade intersections on NHS routes, apply Matrix 2.

(1) Documentation must provide assurance of no adverse effect to main line flow. Otherwise process a deviation through level 4

(2) If existing shoulder width is decreased below minimum values, when placing new guardrail or concrete barrier, a deviation request justifying the proposal is required.

(3) Where existing pavement width is 39 feet or greater.

Minor Operational Enhancement Matrix 1
Interstate & NHS Freeway Routes
Figure 340-2

⇩ Project Type	Main Line						Intersections				Barriers All		Doc. Level
Design Elements ⇨	Sight Dist.	Lane Width	Lane Tran-sition	Shldr Width	Fill/ Ditch Slopes	Clear Zone	Turn Radii	Angle	Sight Dist.	Ped & Bike	Term. & Trans. Section	(2) Std Run	
Regulatory - (Traffic Office Authority)													**BD**
Driver Guidance - (Traffic Office Authority)													**BD**
Pavement Widening													
(2-1Q) Turn Lane	**M/2**	**M/3**	**F/2**	**M/3**	**M/2**	**F/2**	**M/DJ**	**M/DJ**	**F/DJ**	**F/DJ**	**F/3**	**F/3**	**BD+**
(2-2Q) Pullout	**M/2**	**M/3**	**F/2**	**M/3**	**M/2**	**F/2**	**M/DJ**	**M/DJ**	**F/DJ**	**F/DJ**	**F/3**	**F/3**	**BD+**
(2-3Q) Expansion	**M/2**	**M/3**	**F/2**	**M/3**	**M/2**	**F/2**	**M/DJ**	**M/DJ**	**F/DJ**	**F/DJ**	**F/3**	**F/3**	**BD+**
Rechannelize Existing Pavement													
(2-4Q) Pavement Markings	**M/2**	**M/3**	**F/2**	**M/3**		**F/2**	**M/DJ**	**M/DJ**	**F/DJ**	**F/DJ**	**F/3**	**F/3**	**BD+**
(2-5Q) Raised Channelization	**M/2**	**M/3**	**F/2**	**M/3**		**F/2**	**M/DJ**	**M/DJ**	**F/DJ**	**F/DJ**	**F/3**	**F/3**	**BD+**
(2-6Q) Left-Turn Channelization 2-Lane Hwys (3)		**DJ**	.	**DJ**						**M**			
Nonmotorized Facilities													
(2-7Q) Sidewalk/Walkway	**M/2**	**M/3**	**F/2**	**M/3**	**M/2**	**F/2**	**M/DJ**	**M/DJ**	**F/DJ**	**F/DJ**	**F/3**	**F/3**	**BD+**
(2-8Q) Separated Trails	M/2				M/2	F/2				F/DJ	F/3	F/3	BD+
(2-9Q) Spot Improvement	M/2	M/3	F/2	M/3	M/2	F/2	M/DJ	M/DJ	F/DJ	F/DJ	F/3	F/3	BD+
Roadside													
(2-10Q) Cross Section	**M/2**				**M/2**	**F/2**			**F/DJ**		**F/3**	**F/3**	**BD+**
(2-11Q) Protection	**M/2**				**M/2**	**F/2**			**F/DJ**		**F/3**	**F/3**	**BD+**
(2-12Q) New Object	**M/2**				**M/2**	**F/2**			**F/DJ**		**F/3**	**F/3**	**BD+**

□ Not Applicable
F Full design level
M Modified design level. See Chapter 430.
DJ Design Justification required and Project Approval by region Traffic, with notification to Headquarters Design.
2 Deviation approval through the region's Traffic and Project Development Engineers, with notification to Headquarters Design.
3 Deviation approval through level 2 and the Assistant State Design Engineer.
BD Basic Documentation required.
BD+ Basic Documentation plus supplemental coordination required.

If a project impacts any design element, the impacted elements are addressed. Elements not impacted, are not addressed.

For items not meeting the design level provided in the matrix, justification or deviation is required and is processed through the designated approval level, DJ, 2 or 3.

For interchange features, apply Matrix 1.

(2) If existing shoulder width is decreased below minimum values, when placing new guardrail or concrete barrier, a deviation request justifying the proposal is required.

(3) Where existing pavement width is 39 feet or greater.

Minor Operational Enhancement Matrix 2
NHS Non-freeway Routes
Figure 340-3

⇩ Project Type	Main Line						Intersections				Barriers All		Doc. Level
Design Elements ⇨	Sight Dist.	Lane Width	Lane Tran-sition	Shldr Width	Fill/ Ditch Slopes	Clear Zone	Turn Radii	Angle	Sight Dist.	Ped & Bike	Term. & Trans. Section	(2) Std Run	
Regulatory - (Traffic Office Authority)													**BD**
Driver Guidance - (Traffic Office Authority)													**BD**
Pavement Widening													
(3-1Q) Turn Lane	**M/DJ**	**M/2**	**F/DJ**	**M/2**	**M/DJ**	**F/DJ**	**M/DJ**	**M/DJ**	**F/DJ**	**F/DJ**	**F/2**	**F/2**	**BD+**
(3-2Q) Pullout	**M/DJ**	**M/2**	**F/DJ**	**M/2**	**M/DJ**	**F/DJ**	**M/DJ**	**M/DJ**	**F/DJ**	**F/DJ**	**F/2**	**F/2**	**BD+**
(3-3Q) Expansion	**M/DJ**	**M/2**	**F/DJ**	**M/2**	**M/DJ**	**F/DJ**	**M/DJ**	**M/DJ**	**F/DJ**	**F/DJ**	**F/2**	**F/2**	**BD+**
Rechannelize Existing Pavement													
(3-4Q) Pavement Markings	**M/DJ**	**M/2**	**F/DJ**	**M/2**		**F/DJ**	**M/DJ**	**M/DJ**	**F/DJ**	**F/DJ**	**F/2**	**F/2**	**BD+**
(3-5Q) Raised Channelization	**M/DJ**	**M/2**	**F/DJ**	**M/2**		**F/DJ**	**M/DJ**	**M/DJ**	**F/DJ**	**F/DJ**	**F/2**	**F/2**	**BD+**
(3-6Q) Left-Turn Channelization 2-Lane Hwys (3)		**DJ**	.	**DJ**						**M**			
Nonmotorized Facilities													
(3-7Q) Sidewalk/Walkway	**M/DJ**	**M/2**	**F/DJ**	**M/2**	**M/DJ**	**F/DJ**	**M/DJ**	**M/DJ**	**F/DJ**	**F/DJ**	**F/2**	**F/2**	**BD+**
(3-8Q) Separated Trails	**M/DJ**				**M/DJ**	**F/DJ**				**F/DJ**	**F/2**	**F/2**	**BD+**
(3-9Q) Spot Improvement	**M/DJ**	**M/2**	**F/DJ**	**M/2**	**M/DJ**	**F/DJ**	**M/DJ**	**M/DJ**	**F/DJ**	**F/DJ**	**F/2**	**F/2**	**BD+**
Roadside													
(3-10Q) Cross Section	**M/DJ**				**M/DJ**	**F/DJ**			**F/DJ**		**F/2**	**F/2**	**BD+**
(3-11Q) Protection	**M/DJ**				**M/DJ**	**F/DJ**			**F/DJ**		**F/2**	**F/2**	**BD+**
(3-12Q) New Object	**M/DJ**				**M/DJ**	**F/DJ**			**F/DJ**		**F/2**	**F/2**	**BD+**

□ Not Applicable
F Full design level
M Modified design level. See Chapter 430.
DJ Design Justification required and Project Approval by region Traffic, with notification to Headquarters Design.
2 Deviation approval through the region's Traffic and Project Development Engineers, with notification to Headquarters Design.
3 Deviation approval through level 2 and the Assistant State Design Engineer.
BD Basic Documentation required.
BD+ Basic Documentation plus supplemental coordination required.

If a project impacts any design element, the impacted elements are addressed. Elements not impacted, are not addressed.

For items not meeting the design level provided in the matrix, justification or deviation is required and is processed through the designated approval level, DJ, 2 or 3.

For interchange features, apply Matrix 1.

(2) If existing shoulder width is decreased below minimum values, when placing new guardrail or concrete barrier, a deviation request justifying the proposal is required.

(3) Where existing pavement width is 39 feet or greater.

Minor Operational Enhancement Matrix 3
Non-NHS Routes
Figure 340-4

Date Placeholder

TO: (Specify) Region Traffic Engineer[1]

THRU:

FROM:

SUBJECT:

Design Approved By:

_____

(Specify) Region Traffic Engineer[1]

_____

Date

General Information

SR _____ is a (*NHS or Non-NHS*) route, and classified as a (*Urban or Rural*) (*Interstate, Principal Arterial, Minor Arterial, Collector or Urban Managed Access Roadway*) in _____ County. The posted speed limit is ____ mph. The ADT is, _____ with _____ percent trucks. The project is within a (*full, partial, or modified limited access control, or Class 1 - 5 managed access controlled*) area.

Project Initiation

How did the project get started? Accident history, constituent call, e-mail, or letter?

Existing Geometrics

What is out there today? Lane, shoulder, sidewalk widths? Turn pockets, etc.?

Project Description

How did you come to the design decision being proposed? What does it resolve for the situation at hand? What options have you looked at? Why were other options not selected?

Proposed Geometrics

What will be out there when you are through? Lane, shoulder, sidewalk widths? Turn pockets, etc.?

[1] For example "Eastern Region Traffic Engineer"

Q Project Design Summary/Approval Template

Figure 340-5a

Resurfacing

If pavement is involved what does the resurfacing report say to use?

Pavement Marking/Traffic Control Devices

What happens with the pavement markings? Signing? Illumination? Signals? Etc.?

Environmental Approval

Did you check with the Environmental Services Office? Are there any issues or permits that need to be addressed? Hydraulics?

Deviations

Are there any deviations? Describe briefly what features are deviated and the date of approval.

Permits

Are there any permits or easements needed? Construction permits? Noise variances? Utility relocations? Detours? Signal? Others?

Project Cost and Schedule

How much do you anticipate spending? When is the project scheduled for advertisement? When do you anticipate the project will be completed?

Sole Source Justification

Some traffic items are sole source and require justification. Have you completed the process?

Work Zone Traffic Control

What happens to traffic, pedestrians, and bicyclists during construction? Is a lane taken or reduced in width? Night work? Shoulder work? Duration? Does Washington State Patrol (WSP) need to be involved?

Local Agency Coordination

Do we need to coordinate with, or notify the city or county? WSP?

We are requesting approval for the Subject project. This project was designed in accordance with Q Program guidelines for Minor Operational Enhancements, Matrix _____ *note matrix title and project type line.*

Typist's Initials Placeholder

Attachments: Channelization Plan?
Permits?
Deviations?

cc: Headquarters Design 47329

Q Project Design Summary/Approval Template (continued)
Figure 340-5b

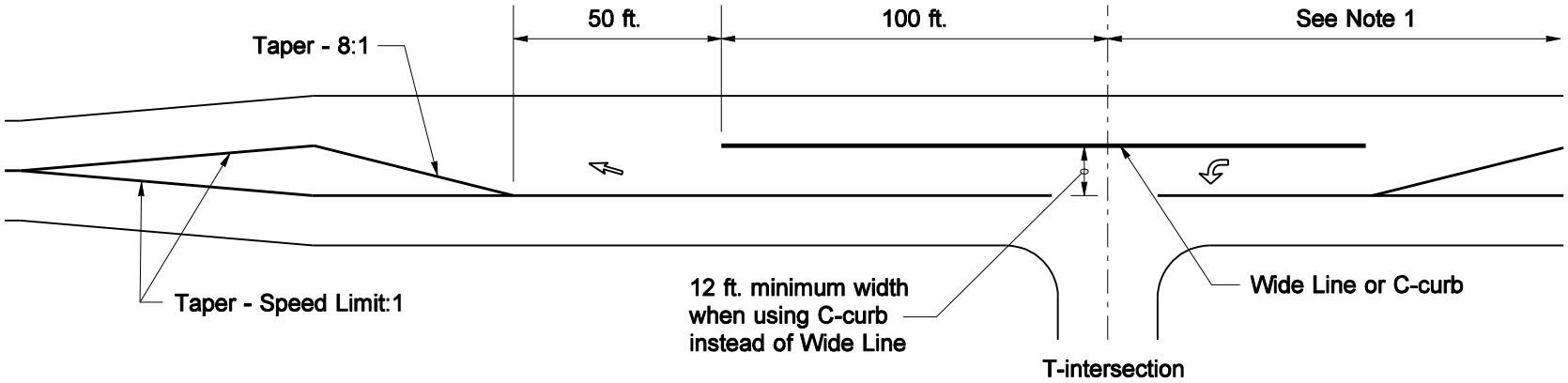

Notes:

1. See Chapter 910 for left-turn channelization.

Refuge Lane for T-Intersections on 2-Lane Highways
Figure 340-6

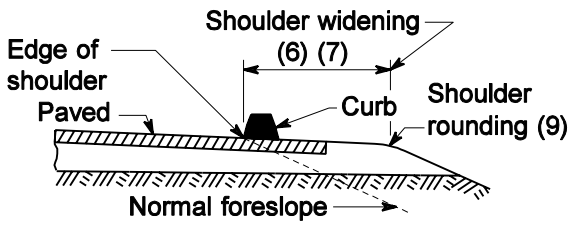

Asphalt Concrete Curb Placement

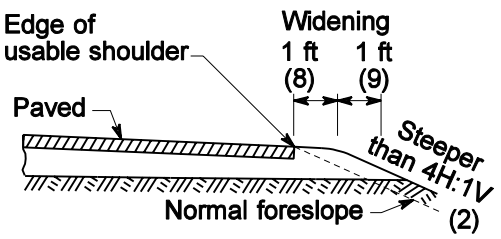

Shoulder Rounding

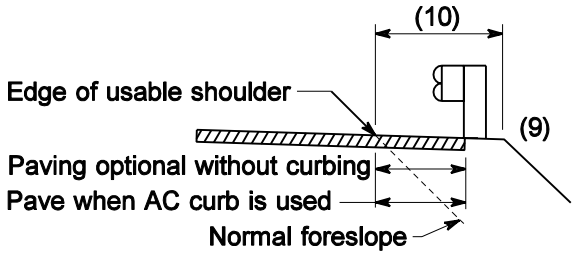

Shoulder Widening for Guardrail

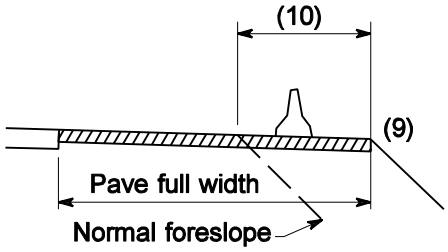

Shoulder Widening for Barrier

Notes:

(1) Shoulder cross slopes are normally the same as the cross slopes for adjacent lanes. See 640.04(3) in the text for examples, additional information, and requirements of locations where it may be desirable to have a shoulder cross slope different than the adjacent lane.

(2) Widening and shoulder rounding outside the usable shoulder is required when foreslope is steeper than 4H:1V.

(3) See Chapters 430, 440, and 940 for minimum shoulder width.

(4) On divided multilane highways see Figures 640-6a through 6c for additional details and requirements for median shoulders.

(5) See Chapter 1025 for additional requirements for sidewalks.

(6) It is preferred that curb not be used on high speed facilities (posted speed >40 mph).

(7) Paved shoulders are required wherever extruded curb is placed. Use curb only where necessary to control drainage from roadway runoff. See the Standard Plans for additional details and dimensions.

(8) When rounding is required, use it uniformly on all ramps and crossroads, as well as the main roadway.

End rounding on the crossroad just beyond the ramp terminals and at a similar location where only a grade separation is involved.

(9) When widening beyond the edge of usable shoulder is required for curb, barrier, or other purposes, additional widening for shoulder rounding is not required.

(10) See Chapter 710 for required widening for guardrail and concrete barrier.

Shoulder Details

Figure 640-5b

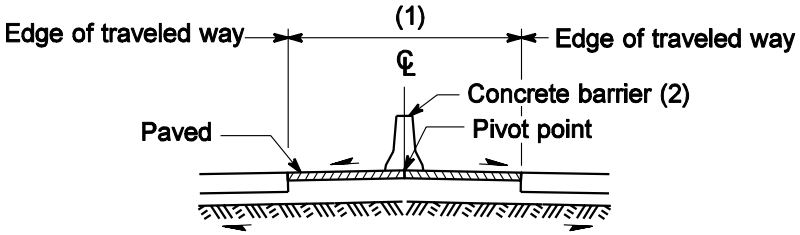

Design A Crowned Median

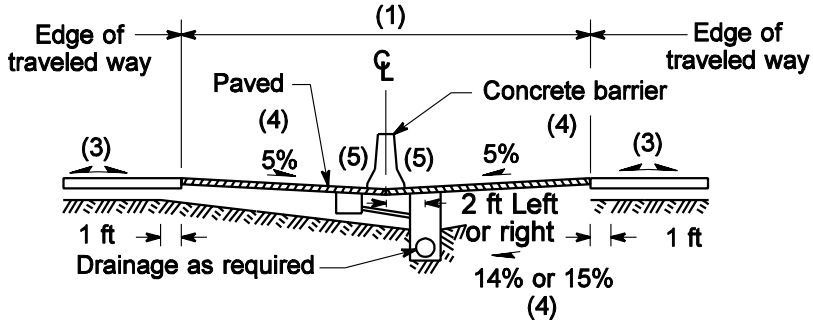

Design B Depressed Median

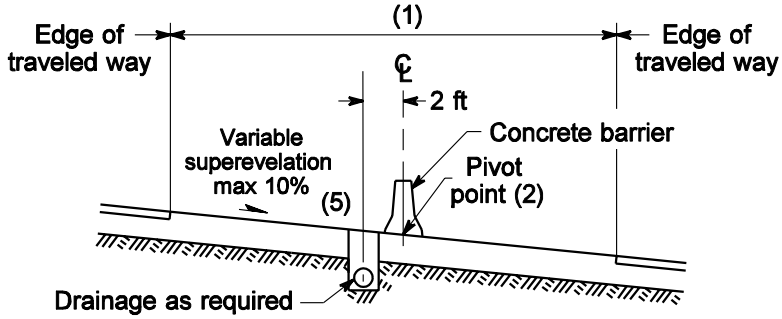

Alternate Design 1 Treatment on Curves

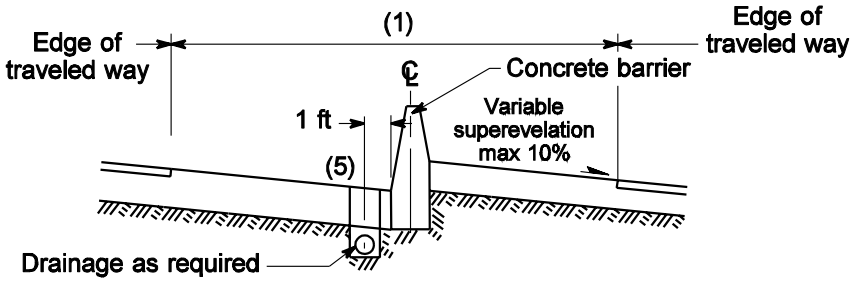

Alternate Design 2 No Fixed Pivot Point (2)

For notes see Figure 640-6c

Divided Highway Median Sections

Figure 640-6a

940.01 General
940.02 References
940.03 Definitions
940.04 Interchange Design
940.05 Ramps
940.06 Interchange Connections
940.07 Ramp Terminal Intersections at Crossroads
940.08 Interchanges on Two-Lane Highways
940.09 Interchange Plans
940.10 Documentation

940.01 General

The primary purpose of an interchange is to eliminate conflicts caused by vehicle crossings and to minimize conflicting left-turn movements. Interchanges are provided on all Interstate highways, freeways, other routes on which full access control is required, and at other locations where traffic cannot be controlled safely and efficiently by intersections at grade.

See the following chapters for additional information:

Chapter	Subject
640	Ramp Sections
641	Turning Widths
642	Superelevation
910	Intersections
1050	HOV Lanes
1055	HOV Direct Access Connections
1420	Access Control
1425	Access Point Decision Report
1430	Limited Access

940.02 References

Standard Plans for Road, Bridge, and Municipal Construction (Standard Plans), M 21-01, WSDOT

Plans Preparation Manual, M 22-31, WSDOT

Standard Specifications for Road, Bridge, and Municipal Construction (Standard Specifications), M 41-10, WSDOT

A Policy on Geometric Design of Highways and Streets (Green Book), 2001, AASHTO

A Policy on Design Standards - Interstate System, 1991, AASHTO

Highway Capacity Manual (Special Report 209), Transportation Research Board

Procedure for Analysis and Design of Weaving Sections, A User's Guide, October 1985, Jack E. Leisch

940.03 Definitions

auxiliary lane The portion of the roadway adjoining the traveled way for parking, speed change, turning, storage for turning, weaving, truck climbing, passing, and other purposes supplementary to through traffic movement

basic number of lanes The minimum number of general purpose lanes designated and maintained over a significant length of highway.

collector distributor road (C-D road) A parallel roadway designed to remove weaving from the main line and to reduce the number of main line entrances and exits.

decision sight distance The sight distance required for a driver to detect an unexpected or difficult-to-perceive information source or hazard, interpret the information, recognize the hazard, select an appropriate maneuver, and complete it safely and efficiently.

frontage road An auxiliary road that is a local road or street located on the side of a highway for service to abutting properties and adjacent areas, and for control of access.

gore The area downstream from the intersection of the shoulders of the main line and exit ramp. Although generally the area between a main line and an exit ramp, the term may also be used to refer to the area between a main line and an entrance ramp.

intersection at grade The general area where a state highway or ramp terminal is met or crossed at a common grade or elevation by another state highway, a county road, or a city street.

Interstate System A network of routes selected by the state and the FHWA under terms of the federal aid acts as being the most important to the development of a national transportation system. The Interstate System is part of the principal arterial system.

lane A strip of roadway used for a single line of vehicles.

median The portion of a divided highway separating the traveled ways for traffic in opposite directions.

outer separation The area between the outside edge of traveled way for through traffic and the nearest edge of traveled way of a frontage road.

painted nose The point where the main line and ramp lanes separate.

physical nose The point, upstream of the gore, with a separation between the roadways of 16 to 22 ft. See Figures 940-11a and 11b.

ramp A short roadway connecting a main lane of a freeway with another facility for vehicular use such as a local road or another freeway.

ramp connection The pavement at the end of a ramp, connecting it to a main lane of a freeway.

ramp meter A traffic signal at a freeway entrance ramp that allows a measured or regulated amount of traffic to enter the freeway.

ramp terminal The end of a ramp at a local road.

roadway The portion of a highway, including shoulders, for vehicular use. A divided highway has two or more roadways.

sight distance The length of highway visible to the driver.

shoulder The portion of the roadway contiguous with the traveled way, primarily for accommodation of stopped vehicles, emergency use, lateral support of the traveled way, and (where permitted) use by bicyclists and pedestrians.

stopping sight distance The sight distance required to detect a hazard and safely stop a vehicle traveling at design speed.

traffic interchange A system of interconnecting roadways, in conjunction with one or more grade separations, providing for the exchange of traffic between two or more intersecting highways or roadways.

traveled way The portion of the roadway intended for the movement of vehicles, exclusive of shoulders and lanes for parking, turning, and storage for turning.

940.04 Interchange Design

(1) General

All freeway exits and entrances, except HOV direct access connections, are to connect on the right of through traffic. Deviations from this requirement will be considered only for special conditions.

HOV direct access connections may be constructed on the left of through traffic when they are designed in accordance with Chapter 1055.

Provide complete ramp facilities for all directions of travel wherever possible. However, give primary consideration to the basic traffic movement function that the interchange is to fulfill.

Few complications will be encountered in the design and location of rural interchanges that simply provide a means of exchanging traffic between a limited access freeway and a local crossroad. The economic and operational effects of locating traffic interchanges along a freeway through a community requires more careful consideration, particularly with respect to local access, to provide the best local service possible without reducing the capacity of the major route or routes.

Where freeway to freeway interchanges are involved, do not provide ramps for local access unless they can be added conveniently and without detriment to safety or reduction of ramp and through-roadway capacity. When exchange of traffic between freeways is the basic function and local access is prohibited by access control restrictions or traffic volume, it may be necessary to provide separate interchanges for local service.

Chapter 1025 Pedestrian Design Considerations

1025.01 General
1025.02 References
1025.03 Definitions
1025.04 Policy
1025.05 Pedestrian Human Factors
1025.06 Pedestrian Activity Generators
1025.07 Pedestrian Facility Design
1025.08 Documentation

1025.01 General

Pedestrians are present on most highways and transportation facilities, yet their travel mode differs vastly and sometimes is in conflict with the requirements for vehicular travel. The challenge is to provide safe and efficient facilities that address these two competing interests within a limited amount of right of way. Sidewalks and trails serve as critical links in the transportation network. Facilities that encourage pedestrian activities are a part of comprehensive transportation planning and development programs for urban and rural communities.

1025.02 References

Design Guidance, Accommodating Bicycle and Pedestrian Travel. A Recommended Approach, USDOT Policy Statement, 2001

Manual on Uniform Traffic Control Devices for Streets and Highways (MUTCD), USDOT, Washington DC, 1988, including the *Washington State Modifications to the MUTCD*, M 24-01, WSDOT, 1996

RCW 46.04.160, "Crosswalk"

RCW 46.61.240, "Crossing at other than crosswalks"

RCW 47.24.010, City streets as part of state highways, "Designation-construction, maintenance-return to city or town"

RCW 47.24.020, City streets as part of state highways, "Jurisdiction, control"

Roadside Manual, M 25-30, WSDOT

Sidewalk Details, WSDOT, 2000

Standard Plans for Road, Bridge, and Municipal Construction (Standard Plans), M 21-01, WSDOT

Pedestrian Facilities Guidebook: Incorporating Pedestrians into Washington's Transportation System, OTAK, 1997

1025.03 Definitions

accessible route An unobstructed pedestrian route that meets the requirements of the Americans with Disabilities Act accessibility guidelines.

ADA An abbreviation for the Americans with Disabilities Act of 1990. The ADA is a civil rights law that identifies and prohibits discrimination based on disability. The ADA requires public entities to design new facilities or alter existing facilities, including sidewalks and trails that are accessible to people with disabilities. Preservation projects, usually, are not considered an alteration of existing facilities. Accessibility can be addressed in preservation projects as a spot safety improvement.

bulb out A curb and sidewalk bulge or extension out into the roadway used to decrease the length of a pedestrian crossing.

crosswalk That marked or unmarked portion of a roadway designated for a pedestrian crossing.

landing A level area at the top of a pedestrian ramp.

midblock pedestrian crossing A marked pedestrian crossing located between intersections.

pedestrian facilities Walkways such as sidewalks, highway shoulders, walking and hiking trails, shared use paths, pedestrian grade separations, crosswalks, and other improvements provided for the benefit of pedestrian travel.

pedestrian-friendly A term for an environment that is safe, pleasant, and inviting to pedestrians.

pedestrian refuge island A raised area between traffic lanes that provides a place for pedestrians to wait to cross the street.

raised median A raised island in the center of a road used to restrict vehicle left turns and side street access. Pedestrians often use this median as a place of refuge when crossing a roadway.

1025.04 Policy

(1) General

Pedestrian facilities are required along and across most sections of state routes and are an integral part of the transportation system. Walkways and other pedestrian facilities are considered in the project definition phase. The only factors that will preclude providing pedestrian facilities in a project are as follows:

- Pedestrians are prohibited by law from using the facility.
- The cost of the improvements is excessive and disproportionate to the original need or probable use (as a guide, more than 20% of the original estimate).
- Low population density or other factors indicate that there is no need.

(2) Funding Programs

The adequacy of appropriate pedestrian facilities is addressed in mobility, safety, bridge replacement, and economic initiative projects in both the Highway Capitol Improvement and Preservation Programs. Federal, state, and local funds are available for pedestrian facility projects.

(a) **Improvement Program**

Mobility Program (I-1). Pedestrian facilities are included in improvement projects in urban areas unless the facility is restricted to motor vehicle use. In urban areas, pedestrian facilities can include traffic control devices, grade separations, crosswalks, sidewalks, and illumination. Other technologies, design features, or strategies, such as creating a pedestrian-friendly atmosphere, are generally beyond the scope of usual highway construction projects. These design features, however, can be included in a highway project when a local agency desires to participate and can provide the necessary funding. Partnership agreements between the state and local agencies to provide pedestrian amenities are effective ways to address seemingly different goals.

In rural areas, paved roadway shoulders are usually sufficient as pedestrian facilities. In high pedestrian use areas adjacent to the highway (state parks, recreation areas, and public-owned parking lots) additional signing, marked crosswalks, and separate pedestrian paths and trails might be necessary. Separate pedestrian paths or trails are appropriate, in some circumstances, as connections between activity centers or as part of a comprehensive trails plan.

Safety Program (I-2). Pedestrian Accident Locations (PALs) are sections of state routes with four or more pedestrian collisions with vehicles in a six-year period. PALs usually have a high societal cost and compete favorably with High Accident Locations (HALs) for safety funding.

Pedestrian Risk Projects are sections of state highways that have a high risk of pedestrian collisions with vehicles based on adjacent land use, roadway geometric design, and traffic conditions. Each region has a funding allotment to address pedestrian risk locations. Short sections of sidewalks, illumination, raised medians, and other pedestrian facilities are eligible for safety funding where there are pedestrian collisions, such as part of PAL or a High Accident Corridor (HAC).

Economic Initiatives (I-3). Projects supporting tourism development, promoting the interpretation of heritage resources, and ensuring public access to rest room equipped facilities can include limited pedestrian facility improvements if the site generates pedestrian activity.

(b) **Preservation Program**

Roadway Program (P-1). Projects funded by the Highway Capitol Preservation Program usually do not include enhancement of existing pedestrian facilities except as minor pedestrian spot safety improvements. Other funding sources, including local agency participation through federal grants, can be used for sidewalks, walkways, or other pedestrian facilities in these projects.

Chapter 1050 High Occupancy Vehicle Facilities

1050.01 General
1050.02 References
1050.03 Definitions
1050.04 Preliminary Design and Planning
1050.05 Operations
1050.06 Design Criteria
1050.07 Documentation

1050.01 General

High occupancy vehicle (HOV) facilities include separate HOV roadways, HOV lanes, transit lanes, HOV direct access ramps, and flyer stops. The objectives for the HOV facilities are:

- Improve the capability of corridors to move more people by increasing the number of people per vehicle.
- Provide travel time savings and a more reliable trip time to HOV lane users.
- Provide safe travel options for HOVs without adversely affecting the safety of the general-purpose lanes.

Plan, design, and construct HOV facilities that ensure intermodal linkages. Give consideration to future highway system capacity needs. Whenever possible, design HOV lanes so that the level of service for the general-purpose lanes will not be degraded.

In urban corridors that do not currently have planned or existing HOV lanes, complete an analysis of the need for HOV lanes before proceeding with any projects for additional general-purpose lanes. In corridors where both HOV and general-purpose facilities are planned, construct the HOV lane before or simultaneously with the construction of new general-purpose lanes.

See the following chapters for additional information:

Chapter	Subject
430	general-purpose roadway widths for modified design level
440	general-purpose roadway widths for full design level
640	other cross section data
641	general-purpose turning roadway widths
1055	HOV Direct Access

1050.02 References

Revised Code of Washington (RCW) 46.61.165, High-occupancy vehicle lanes

RCW 47.52.025, Additional powers — Controlling use of limited access facilities — High-occupancy vehicle lanes

Washington Administrative Code (WAC) 468-510-010, High occupancy vehicles (HOVs)

Standard Plans for Road, Bridge, and Municipal Construction (Standard Plans), M 21-01, Washington State Department of Transportation (WSDOT)

Manual on Uniform Traffic Control Devices for Streets and Highways (MUTCD), 2000, U.S. Department of Transportation, Federal Highway Administration; including the *Washington State Modifications to the MUTCD*, M 24-01, WSDOT

Traffic Manual, M 51-02, WSDOT

Guide for the Design of High Occupancy Vehicle Facilities, American Association of State Highway and Transportation Officials (AASHTO)

Design Features of High Occupancy Vehicle Lanes, Institute of Traffic Engineers (ITE)

High-Occupancy Vehicle Facilities: Parsons Brinkerhoff, Inc.

NCHRP Report 414, *HOV Systems Manual*

1050.03 Definitions

buffer-separated HOV lane An HOV lane that is separated from the adjacent same direction general-purpose freeway lanes by a designated buffer.

bus rapid transit (BRT) An express rubber tired transit system operating predominantly in roadway managed lanes. It is generally characterized by separate roadway or buffer-separated HOV lanes, HOV direct access ramps, and a high occupancy designation (3+ or higher).

business access transit (BAT) lanes A transit lane that allows use by other vehicles to access abutting businesses.

enforcement area A place where vehicles may be stopped for ticketing by law enforcement. It also may be used as an observation point and for emergency refuge.

enforcement observation point A place where a law enforcement officer may park and observe traffic.

flyer stop A transit stop inside the limited access boundaries.

high occupancy toll (HOT) lane A managed lane that combines a high occupancy vehicle lane and a toll lane.

high occupancy vehicle (HOV) A vehicle that fits one of the following:

(1) Rubber tired municipal transit vehicles.

(2) Buses with a carrying capacity of sixteen or more persons, including the operator.

(3) Motorcycles.

(4) Recreational vehicles that meet the occupancy requirements of the facility.

(5) All other vehicles that meet the occupancy requirements of the facility, except trucks in excess of 10,000 lb gross vehicle weight.

HOV direct access ramp An on or off ramp exclusively for the use of HOVs that provides access between a freeway HOV lane and a street, transit support facility, or another freeway HOV lane without weaving across general-purpose lanes.

HOV facility A priority treatment for HOVs.

level of service A qualitative measure describing operational conditions within a traffic stream, incorporating factors of speed and travel time, freedom to maneuver, traffic interruptions, comfort and convenience, and safety.

managed lane A lane that increases efficiency by packaging various operational and design actions. Lane management operations may be adjusted at any time to better match regional goals.

nonseparated HOV lane An HOV lane that is adjacent to and operates in the same direction as the general-purpose lanes with unrestricted access between the HOV lane and the general-purpose lanes.

occupancy designation The minimum number of occupants required for a vehicle to use the HOV facility.

separated HOV facility An HOV roadway that is physically separated from adjacent general-purpose lanes by a barrier, median, or on a separate right of way.

single occupant vehicle (SOV) Any motor vehicle other than a motorcycle carrying one occupant.

transit lane A lane for the exclusive use of transit vehicles.

violation rate The total number of violators divided by the total number of vehicles on an HOV facility.

1050.04 Preliminary Design and Planning

(1) Planning Elements for Design

In order to determine the appropriate design options for an HOV facility, the travel demand and capacity must first be established; identify suitable corridors, evaluate the HOV facility location and length, and estimate the HOV demand. A viable HOV facility will satisfy the following criteria:

- Be part of an overall transportation plan.
- Have the support of the community and public.

- Respond to demonstrated congestion or near-term anticipated congestion: Level of Service E or F for at least one hour of peak period (traffic approaching a capacity of 1,700 to 2,000 vehicles per hour per lane) or average speeds less than 30 mph during peak periods over an extended distance.
- Except for a bypass of a local bottleneck, be of sufficient length to provide a travel time saving of at least 5 minutes during the peak periods.
- Have sufficient numbers of HOV users for a cost-effective facility and to avoid the perception of under utilization. (HOV volumes of 400 to 500 vehicles per hour on nonseparated lanes and 600 to 800 on separated facilities.)
- Provide a safe, efficient, and enforceable operation.

A queue or bottleneck bypass can be effective without satisfying all of the above. An isolated bypass can be viable when there is localized, recurring traffic congestion, and such treatment will provide a travel time saving to an adequate number of HOV users.

The efficiency of the HOV facility can be affected by the access provisions. Direct access between park and ride/transit facilities and an HOV lane is the most desirable, but it is also an expensive alternative. Direct access options are discussed in Chapter 1055.

Document the need for the HOV lane and how the proposed lane will meet those needs.

(2) HOV Facility Type

Make a determination as to the type of HOV lane. The three major choices are separated roadway, buffer-separated lane, and nonseparated HOV lane.

(a) **Separated Roadway.** The separated roadway can be either a one-way reversible or a two-way operation. The directional split in the peak periods, space available, and operating logistics are factors to be considered. A separated HOV roadway may be located in the median of the freeway, next to the freeway, or on an independent alignment. Separated HOV facilities are more effective for:

- Large HOV volumes.
- Large merging and weaving volumes.
- Long-distance HOV travel.

Reversible, separated roadways operate effectively where there are major directional splits during peak periods. Consider potential changes in this traffic pattern and designing the facility to accommodate possible conversion to two-way operation. The separated roadway is normally more efficient, provides for the higher level of safety, and is more easily enforced. However, it is generally the most expensive type of HOV facility to implement.

(b) **Buffer-Separated.** A buffer-separated HOV lane is similar to a freeway nonseparated HOV lane on the left, but with a buffer between the HOV lane and the general-purpose lanes. The addition of a buffer provides better delineation between the lanes and controls access between the HOV lane and general-purpose lanes to improve operation.

(c) **Nonseparated.** Nonseparated HOV lanes operate in the same direction and immediately adjacent to the general-purpose lanes. They are located either to the left (preferred) or to the right of the general-purpose lanes. Nonseparated HOV lanes are normally cheaper, easier to implement, and provide more opportunity for frequent access. However, the ease of access can create more problems for enforcement and a higher potential for conflicts.

(3) Freeway Operational Alternatives

For an HOV lane on a limited access facility, consider the following operational alternatives:

- Inside (preferred) or outside HOV lane.
- Lane conversion.
- Use of existing shoulder (not recommended for permanent operations).
- HOV direct access ramps.
- Queue bypasses.
- Flyer stops.
- Hours of operation.

When evaluating alternatives, consider a combination of alternatives to provide the best solution for the corridor. Also, incorporate flexibility into the design in order not to preclude potential changes in operation, such as outside-to-inside lane and reversible to two-way operations. Access, freeway-to-freeway connections, and enforcement will have to be accommodated for such changes. Document the operational alternatives.

(a) **Inside Versus Outside HOV Lane.** System continuity and consistency of HOV lane placement along a corridor are important and influence facility development decisions. Other issues include land use, trip patterns, transit vehicle service, HOV volume, ramp volume, congestion levels, safety, enforcement, and direct access to facilities.

The inside (left) HOV lane is most appropriate for a corridor with long distance trip patterns, such as a freeway providing mobility to and from a large activity center. These trips are characterized by long distance commuters and express transit service. Maximum capacity for an effective inside HOV lane is approximately 1,500 vehicles per hour. When the HOVs weaving across the general-purpose lanes cause severe congestion, consider implementing HOV direct access ramps, separated HOV roadways, or a higher occupancy designation. Inside lanes are preferred for HOV lanes on freeways.

The outside (right) HOV lane is most appropriate for a corridor with shorter, widely dispersed trip patterns. These trip patterns are characterized by transit vehicle routes that exit and enter at nearly every interchange. The maximum capacity for an effective outside HOV lane is reduced and potential conflicts are increased by heavy main line congestion and large entering and exiting general-purpose volumes.

(b) **Conversion of a General-Purpose Lane.** The use of an existing general-purpose lane for an HOV lane is not a preferred option; however, conversion of a lane to an HOV lane might be justified when the conversion provides greater people-moving capability on the roadway. Use of an existing freeway lane as an HOV lane will be considered only with a deviation.

Given sufficient existing capacity, converting a general-purpose lane to an HOV lane will provide for greater people moving capability in the future without significantly affecting the existing roadway operations. The fastest and least expensive method for providing an HOV lane is through conversion of a general-purpose lane. Restriping and signing are sometimes all that is needed. Converting a general-purpose lane to HOV use will likely have environmental benefits. This method, however, is controversial from a public acceptance standpoint. Public support might be gained through an effective public involvement program. See Chapter 210, Public Involvement and Hearings.

Lane conversion of a general-purpose lane to an HOV lane must enhance the corridor's people moving capacity. It is critical that an analysis be conducted that includes:

- Public acceptance of the lane conversion.
- Present and long-term traffic impacts on the adjacent general-purpose lanes and the HOV lane.
- Impacts to the neighboring streets and arterials.
- Legal, environmental, and safety impacts.

(c) **Use of Existing Shoulder.** When considering the alternatives in order to provide additional width for an HOV lane, the use of the existing shoulder is not a preferred option. Use of the shoulder on a freeway or freeway ramp as an HOV lane will be considered only with a deviation.

Consider shoulder conversion to an HOV lane when traffic volumes are heavy and the conversion is a temporary measure. Another alternative is to use the shoulder as a permanent measure to serve as a transit-only or queue bypass lane during peak hours and then revert to a shoulder in off peak hours. The use of the shoulder creates special signing, operational, and enforcement problems. An agreement is required with the transit agency to ensure that transit vehicles will only use the shoulder during peak hours. The use of the shoulder must be clearly defined by signs. Institute special operations to ensure the shoulder is clear and available for the designated hours.

The existing shoulder pavement is often not designed to carry heavy volumes of vehicles, especially transit vehicles. As a result, repaving and reconstruction of the shoulder might be required.

(d) **HOV Direct Access Ramps.** To improve the efficiency of an HOV system, exclusive HOV access connections for an inside HOV lane may be considered. See Chapter 1055 for information on HOV direct access connections. Direct access reduces the need for HOVs to cross the general-purpose lanes from right side ramps. Transit vehicles will be able to use the HOV lane and provide service to park and ride lots, flyer stops, or other transit stops by the HOV direct access ramps.

(e) **Queue Bypass Lanes.** A queue bypass lane allows HOVs to save time by avoiding congestion at an isolated bottleneck. An acceptable time saving for a queue bypass is one minute or more. Typical locations for queue bypasses are at ramp meters, signalized intersections, toll plaza or ferry approaches, and locations with isolated main line congestion. By far the most common use is with ramp metering. Queue bypass lanes can be built along with a corridor HOV facility or independently. In most cases, they are relatively low cost and easily implemented. Where practical, include HOV bypasses on ramp metering sites or make provisions for their future accommodation, unless specific location conditions dictate otherwise.

(f) **Flyer Stops.** Flyer stops reduce the time required for express transit vehicles to serve intermediate destinations. However, passengers must travel greater distances to reach the loading platform. For information on flyer stops, see Chapter 1055.

(g) **Hours of Operation.** HOV designation on freeway HOV lanes 24 hours a day provides benefits to users during off peak periods, minimizes potential confusion, makes enforcement easier, and simplifies signing and striping. However, 24-hour operation also might result in a lane not used during off peak periods, negative public opinion, and the need for full time enforcement.

(4) Arterial Street Operational Alternatives

Arterial street HOV lanes also have a variety of HOV alternatives to be considered. Some of these alternatives are site specific or have limited applications. Arterial HOV lanes differ from freeway HOV lanes in slower speeds, little access control (turning traffic can result in right angle conflicts), and traffic signals. Arterial HOV lanes are occasionally designated for transit vehicles only, especially in cities with a large concentration of transit vehicles. When evaluating alternatives consider traffic signal queues and managed access highway class. The alternatives include:

- Type of lane.
- Left side or right side HOV lane.
- Hours of operation.
- Spot treatments.
- Bus stops.

When evaluating alternatives, consider a combination of alternatives to provide the best solution for the corridor. Also, incorporate flexibility into the design in order not to preclude potential changes in operation. Document the operational alternatives.

(a) **Type of lane.** Lanes can be transit only or include all HOVs. Transit only lanes are desirable where bus volumes are high with a high level of congestion. They will increase the speed of transit vehicles through congested areas and improve the reliability of the transit service. Lanes that allow use by all HOVs are appropriate on corridors with high volumes of carpools and vanpools. They can collect carpools and vanpools in business and industrial areas and connect them to the freeway system.

(b) **Left side or right side HOV lane.** Continuity of HOV lane location along a corridor is an important consideration when making the decision whether to locate an arterial street HOV lane on the left or right side of the street. Other issues include land use, trip patterns, transit vehicle service, safety, enforcement, and presence of parking.

The right side is the preferred location for arterial street HOV lanes on transit routes with frequent stops. It is the most convenient for passenger boarding at transit stops. It is also the most common location for HOV lanes on arterial streets. General-purpose traffic must cross the HOV lane to make a right-turn at intersections and to access driveways. These turns across the HOV lane can create conflicts. Minimizing access points that create these conflict locations is recommended. Other issues to consider are on street parking, stopping area for delivery vehicles, and enforcement areas.

Left side arterial street HOV lanes are less common than right side lanes. HOV lanes on the left eliminate the potential conflicts with driveway access, on street parking, and stopping area for delivery vehicles. The result is fewer delays and higher speeds making left side arterial street HOV lanes appropriate for longer distance trips. Disadvantages are the difficulty providing transit stops and the need to provide for left turning general-purpose traffic.

(c) **Hours of operation.** An arterial street HOV lane can either operate as an HOV lane 24 hours a day or during peak hours only. Factors to consider in determining which to use include type of HOV lane, level of congestion, continuity, and enforcement.

HOV lanes operating 24 hours a day are desirable when congestion and HOV demand exists for extended periods throughout the day. The 24 hour operation provides benefits to users during off peak periods, minimizes potential confusion, makes enforcement easier, and simplifies signing and striping. Disadvantages are negative public opinion if the lane is not used during off peak periods, the need for full time enforcement, and the loss of on street parking.

Peak period HOV lanes are appropriate for arterial streets with HOV demand or congestion existing mainly during the peak period. Peak period HOV lanes provide HOV priority at the critical times of the day, lessen the negative public perception of the HOV lane, and allow on street parking or other shoulder uses at other times. The disadvantages include possible confusion to the drivers, more difficult enforcement, increased signing, and the need to institute special operations to ensure the shoulder or lane is clear and available for the designated period.

(d) **Spot Treatments.** A spot HOV treatment is used to give HOVs priority around a bottleneck. It can provide time savings, travel time reliability, and improve access to other facilities. Examples include a short HOV lane to provide access to a freeway on-ramp, one lane of a dual turn-lane, a priority lane at ferry terminals, and priority at traffic signals.

Signal priority treatments that alter the sequence or duration of a traffic signal are techniques for providing preferential treatment for transit vehicles. The priority treatments can range from timing and phasing adjustments to signal preemption. Consider the overall impact on traffic. Preemption would normally not be an appropriate treatment where traffic signal timing and coordination are being utilized or where there are high volumes on the cross streets.

(e) **Bus stops.** Normally, with arterial HOV lanes, there is not a shoulder suitable for a bus to use while stopped to load and unload passengers without blocking the lane. Therefore, bus stops are either in-lane or in a pullout. In-lane bus stops are the simplest type of bus stop. However, stopped buses will block the HOV lane; therefore, in-lane bus stops are only allowed in transit lanes. Bus pullouts provide an area for buses to stop without blocking the HOV lane. Disadvantages include higher cost, reduced width for the sidewalk or other roadside area, and possible difficulty reentering the HOV lane. See Chapter 1060 for additional information on bus stop location and design.

1050.05 Operations

(1) Vehicle Occupancy Designation

Select the vehicle occupancy designation to provide the maximum movement of people in a corridor, provide free-flow HOV operations, reduce the empty lane perception, provide for the ability to accommodate future HOV growth within a corridor, and be consistent with the regional transportation plan and the policies adopted by the metropolitan planning organization (MPO).

An initial occupancy designation must be established. It is WSDOT policy to use the 2+ designation as the initial occupancy designation. Consider a 3+ occupancy designation if it is anticipated during initial operation that the volumes will be 1,500 vehicles per hour for a left-side HOV lane, or 1,200 vehicles per hour for a right-side HOV lane, or that a 45 mph operating speed cannot be maintained for more than 90 percent of the peak hour.

(2) Enforcement

Enforcement is necessary for the success of an HOV facility. Coordination with the Washington State Patrol (WSP) is critical when the operational characteristics and design alternatives are being established. This involvement ensures that the project is enforceable and will receive their support.

Provide both enforcement areas and observation points for all high-speed HOV lanes and ramp facilities.

Barrier-separated facilities, because of the limited access, are the easiest facilities to enforce. Shoulders provided to accommodate breakdowns may also be used for enforcement. Reversible facilities have ramps for the reverse direction that may be used for enforcement. Gaps in the barrier may be needed so emergency vehicles can access barrier-separated HOV lanes.

Buffer-separated and nonseparated HOV lanes allow violators to easily enter and exit the HOV lane. For this reason, providing strategically located enforcement areas and observation points is essential.

Consider the impact on safety and visibility for the overall facility during the planning and design of enforcement areas and observation points. Where HOV facilities do not have enforcement areas, or where officers perceive that the enforcement areas are inadequate, enforcement on the facility will be difficult and less effective.

(3) Intelligent Transportation Systems

The objective of intelligent transportation systems (ITS) is to make more efficient use of our transportation network. This is done by collecting data, managing traffic, and relaying information to the motoring public.

It is important that an ITS system is incorporated into the HOV project and that the HOV facility fully utilize the ITS features available. This includes providing a strategy of incident management since vehicle breakdowns and accidents have a significant impact on the efficient operation of the HOV facilities. See Chapter 860 for more information on ITS.

1050.06 Design Criteria

(1) Design Procedures

See the design matrices (Chapter 325) for the required design level for the elements of an HOV project.

(2) Design Considerations

HOV lanes are designed to the same criteria as the facilities they are attached. Design nonseparated and buffer-separated HOV lanes to match the vertical alignment, horizontal alignment, and cross slope of the adjacent lane. A deviation is required when any proposed or existing design element does not meet the applicable design level for the project.

(3) Adding an HOV Lane

The options for adding an HOV lane are reconstruction, restriping, combined reconstruction and restriping, and possibly lane conversion.

Reconstruction involves creating roadway width. Additional right of way may be required. Restriping involves reallocating the existing paved roadway to create enough space to provide an additional HOV lane. Restriping of lane or shoulder widths to less than for the design level and functional class of the highway is a design deviation and approval is required.

Reconstruction and restriping can be combined to maximize use of the available right of way. For example, a new lane can be created through a combination of median reconstruction, shoulder reconstruction, and lane restriping. Each project will be handled on a case by case basis. Generally consider the following reductions in order of preference:

(a) Reduction of the inside shoulder width, provided the enforcement and safety mitigation issues are addressed. (Give consideration not to preclude future HOV direct access ramps by over reduction of the available median width.)

(b) Reduction of the interior general-purpose lane width to 11 ft.

(c) Reduction of the outside general-purpose lane width to 11 ft.

(d) Reduction of the HOV lane to 11 ft.

(e) Reduction of the outside shoulder width to 8 ft.

If lane width adjustments are necessary, old lane markings must be thoroughly eradicated. It is desirable that longitudinal joints (new or existing) not conflict with tire track lines. If they do, consider overlaying the roadway before restriping.

(4) Design Criteria for Types of HOV Facilities

(a) **Separated Roadway HOV Facilities.** The separated HOV facility can be single lane or multilane and directional or reversible. (See Figure 1050-2.)

1. **Lane Widths.** See Figure 1050-1 for traveled way width (W_R) on turning roadways.

2. **Shoulder Widths.** The shoulder width requirements are as follows:

- The minimum width for the sum of the two shoulders is 12 ft for one-lane facilities and 14 ft for two-lane facilities.
- One of the shoulders must have a width of at least 10 ft for disabled vehicles. The minimum for the other shoulder is 2 ft for one-lane facilities and 4 ft for two-lane facilities.
- The wider shoulder may be on the left or the right as needed to best match the conditions. Maintain the wide shoulder on the same side throughout the facility.

3. **Total Widths.** To reduce the probability of blocking the HOV facility, make the total width (lane width plus paved shoulders) wide enough to allow an A-BUS to pass a stalled A-BUS. For single lane facilities, the traveled way widths (W_R), given in Figure 1050-1, plus the 12 ft total shoulder width will provide for this passing for radii (R) 100 ft or greater. For R of 75 ft, a total roadway width of 33 ft is needed and for R of 50 ft, a total roadway width of 41 ft is needed to provide for the passing.

R (ft)(1)	W_R (ft)	
	1-Lane	2-Lane
3001 to Tangent	13(2)	24
3000	14	24
2000	14	25
1000	15	26
500	15	27
300	15	28
200	16	29
150	17	31
100	18	34
75	19	37
50	22	45

(1) Radius (R) is on the outside edge of traveled way on 1-lane and center line on 2-lane roadways.
(2) May be reduced to 12 ft on tangent.

Minimum Traveled Way Widths for Articulated Buses
Figure 1050-1

(b) **Nonseparated Freeway HOV Lanes.** For both inside and outside HOV lanes, the minimum lane width is 12 ft and the minimum shoulder width is 10 ft. (See Figure 1050-2.)

When a left shoulder less than 10 ft wide is proposed for distances exceeding 1.5 mi, enforcement and observation areas must be provided at 1- to 2-mi intervals. See 1050.06(7).

Where left shoulders less than 8 ft wide are proposed for lengths of roadway exceeding 0.5 mi, safety refuge areas must be provided at 0.5- to 1-mi intervals. These can be in addition to or in conjunction with the enforcement areas.

Allow general-purpose traffic to cross HOV lanes at on-and off-ramps.

(c) **Buffer-Separated HOV lanes.** Design buffer-separated HOV lanes the same as for inside nonseparated HOV lanes, except for a buffer 2 to 4 ft in width or 10 ft or greater in width with pavement marking, with supplemental signing, to restrict crossing. For buffer-separated HOV lanes with a buffer at least 4 ft wide, the left shoulder may be reduced to 8 ft. Buffer widths between 4 and 10 ft are not desirable since they may be used as a refuge area for which the width is not adequate. Provide gaps in the buffer to allow access to the HOV lane.

(d) **Arterial Street HOV Lanes.** The minimum width for an arterial street HOV lane is 12 ft. Allow general-purpose traffic to cross the HOV lanes to turn at intersections and to access driveways. (See Figure 1050-2.)

For right side HOV lanes adjacent to curbs, provide a 4 ft shoulder between the HOV lane and the face of curb. The shoulder may be reduced to 2 ft with justification.

For HOV lanes on the left, a 1 ft left shoulder between the HOV lane and the face of curb is required. When concrete barrier is adjacent to the HOV lane, the minimum shoulder is 2 ft.

(e) **HOV Ramp Meter Bypass.** The HOV bypass may be created by widening an existing ramp, construction of a new ramp where right of way is available, or reallocation of the existing pavement width provided the shoulders are full depth.

Ramp meter bypass lanes may be located on the left or right of metered lanes. Typically, bypass lanes are located on the left side of the ramp. Consult with local transit agencies and the region's Traffic Office for direction on which side to place the HOV bypass.

Consider the existing conditions at each location when designing a ramp meter bypass. Design a single lane ramp with a single metered lane and an HOV bypass as shown on Figure 1050-4a. Make the total width of the metered and bypass lanes equal to a 2-lane ramp (Chapters 641 and 940). Design a ramp with two metered lanes and an HOV bypass as shown on Figure 1050-4b. Make the width of the two metered lanes equal to a 2-lane ramp (Chapters 641 and 940) and the width of the bypass lane as shown on Figure 1050-3. The design shown on Figure 1050-4b requires that the ramp operate as a single lane ramp when the meter is not in operation.

Both Figures 1050-4a and 4b show an observation point/enforcement area. Document any other enforcement area design as a design exception. One alternative (a design exception) is to provide a 10-ft outside shoulder from the stop bar to the main line.

(5) HOV Direct Access Ramps

HOV direct access ramps provide access between an HOV lane and another freeway, a local arterial street, a flyer stop, or a park and ride facility. Design HOV direct access ramps in accordance with Chapter 1055.

(6) HOV Lane Termination

Locate the beginning and end of an HOV lane at logical points. Provide decision sight distance, signing, and pavement markings at the termination points.

The preferred method of terminating an inside HOV lane is to provide a straight through move for the HOV traffic, ending the HOV restriction and dropping a general-purpose lane on the right. However, analyze volumes for both the HOV lanes and general-purpose lanes, and the geometric conditions, to optimize the overall operational performance of the facility.

(7) Enforcement Areas

Enforcement of the inside HOV lane can be done with a minimum 10 ft inside shoulder. For continuous lengths of barrier exceeding 2 mi, a 12 ft shoulder, for the whole length of the barrier, is recommended.

For inside shoulders less than 10 ft, locate enforcement and observation areas at 1- to 2-mi intervals or based on the recommendations of the WSP. These areas can also serve as safety refuge areas for disabled vehicles. See Figures 1050-5a and 5b.

Provide observation points approximately 1300 ft before enforcement areas. They can be designed to serve both patrol cars and motorcycles or motorcycles only. Coordinate with the WSP during the design stage to provide effective placement and to ensure utilization of the observation points. Median openings give motorcycle officers the added advantage of being able to quickly respond to emergencies in the opposing lanes. (See Figure 1050-5b.) The ideal observation point places the motorcycle officer 3 ft above the HOV lane and outside the shoulder so the officer can look down into a vehicle.

Locate the enforcement area on the right side for queue bypasses and downstream from the stop bar so the officer can be an effective deterrent (Figures 1050-4a and 4b).

An optional signal status indicator for enforcement may be placed at HOV lane installations that are metered. The indicator faces the enforcement area so that a WSP officer can determine if vehicles are violating the ramp meter. The indicator allows the WSP officer to simultaneously enforce two areas, the ramp meter and the HOV lane. Consult with the WSP for use at all locations.

See the *Traffic Manual* regarding HOV metered bypasses for additional information on enforcement signal heads.

(8) Signs and Pavement Markings

(a) **Signs.** Provide post-mounted HOV preferential lane signs next to the HOV lane or overhead mounted over the HOV lane. Make the sign wording clear and precise, stating which lane is restricted, the type of HOVs allowed, and the HOV vehicle occupancy designation for that section of road. The sign size, location, and spacing are dependent upon the conditions under which the sign is used. Roadside signs can also be used to convey other HOV information such as the HERO program, carpool information telephone numbers, and violation fines. Some situations may call for the use of variable message signs.

Place overhead signs directly over the HOV lane to provide maximum visibility. Use a sequence of overhead signs at the beginning and end of all freeway HOV facilities. Overhead signs can also be used in conjunction with roadside signs along the roadway.

(b) **Pavement Markings.** Provide pavement markings that conform to the *Traffic Manual* and the Standard Plans.

(c) **Interchanges.** In the vicinity of interchange on and off connections where merging or exiting traffic crosses an HOV lane, make provisions for general-purpose traffic using the HOV lane. These provisions include signing and striping that clearly show the changes in HOV versus general traffic restrictions. See the Standard Plans for pavement markings and signing.

1050.07 Documentation

A list of the documents that are to be preserved [in the Design Documentation Package (DDP) or the Project File (PF)] is on the following web site: http://www.wsdot.wa.gov/eesc/design/projectdev/

1055.01 General
1055.02 References
1055.03 Definitions
1055.04 HOV Access Types and Locations
1055.05 Direct Access Geometrics
1055.06 Passenger Access
1055.07 Traffic Design Elements
1055.08 Documentation

1055.01 General

This Chapter provides design guidance for left-side direct access facilities for high occupancy vehicles (HOVs) between freeway HOV lanes and public-transportation passenger facilities within the freeway right of way and facilities outside of the right of way. Design right-side HOV only access facilities per Chapter 940.

Direct access eliminates the HOV user crossing the general-purpose lanes from left-side HOV lanes to the right-side general-purpose ramps. Also, transit vehicles will be able to use the HOV lane and provide service to the HOV direct access facility.

Providing the HOV user access to the inside HOV lane without mixing with the general-purpose traffic saves the user additional travel time and aids in safety, enforcement, incident handling, and overall operation of the HOV facility.

Locations for direct access ramps include HOV facilities on intersecting routes, park and ride lots, flyer stops, and locations with a demonstrated demand. Coordination with the local transit agencies will result in the identification of these key locations. Give priority to locations that serve the greatest number of transit vehicles and other HOVs.

(1) Existing Facilities

When designing an HOV direct access facility, the existing general-purpose facilities must not be degraded. However, there may be opportunities to improve existing geometrics. These opportunities can be identified during the project definition phase.

When an HOV direct access facility project includes work on the existing facilities, apply the new/reconstruction row of the Interstate Design Matrices and the HOV row of the other matrices in Chapter 325.

(2) Reviews, Studies, and Reports

The normal project development process is to be followed when developing an HOV direct access project. Most facets of the project development process remain unchanged despite the unusual nature of the projects that are the focus of this chapter. For example, early coordination with others is always a vital part of developing a project. There are also environmental considerations, public involvement, and Value Engineering studies (Chapter 315). These are all necessary to ensure appropriate scope and costs.

There may also be reviews, studies, and reports required by agreements with regional transit authorities or other agencies.

An Access Point Decision Report (Chapter 1425) is required when there is a proposal to add, delete, or change an access point. Provide the operational analysis from the report for all flyer stops. For left-side connections, include the commitment that the connection will be used solely by HOVs or will be closed.

Throughout the project development phase, ensure that the:

- Project definition and cost estimate are correct.
- Project development process is on schedule.
- Project documents are biddable.
- Project will be constructible.
- Project will be maintainable.

Constructibility of HOV direct access facilities is an important consideration during the design phase. These facilities will typically be constructed on existing highways with traffic maintained on-site. Key goals are to:

- Ensure that the project can be built.
- Plan a construction strategy.
- Provide a safe work zone.
- Minimize construction delays.

Access to these facilities by maintenance crews must be considered. Avoid items that require a significant maintenance effort and might result in lane closure for routine maintenance or repair.

(3) Left-Side Connections

Left-side connections are allowed only when they serve HOVs only and connect to an HOV lane. The higher traffic volume associated with general-purpose traffic is not acceptable for left-side connections. If the demand for an HOV direct access decreases to the point that the HOV direct access connection is no longer desirable, the connection must be closed.

1055.02 References

Americans with Disabilities Act of 1990 (ADA).

ADA Accessibility Guidelines (ADAAG), The Access Board, http://www.access-board.gov/adaag/html/adaag.htm.

Manual on Uniform Traffic Control Devices for Streets and Highways, USDOT, FHWA; including the *Washington State Modifications to the MUTCD*, Chapter 468-95 WAC, (MUTCD).

Sign Fabrication Manual, M 55-05, WSDOT.

Standard Plans for Road, Bridge, and Municipal Construction (Standard Plans), M 21-01, WSDOT.

High-Occupancy Vehicle Facilities A Planning, Design, and Operation Manual, Parsons Brinkerhoff Inc.

FHWA/PB HOV Interactive 1.0 High Occupancy Vehicle Data Base from the U.S., Canada and Europe (CD ROM), USDOT, FHWA and Parsons Brinkerhoff Inc.

A Policy on Geometric Design of Highways and Streets (Green Book), 2001, AASHTO.

Guide for the Design of High Occupancy Vehicle Facilities, AASHTO.

Transit Implications of HOV Facility Design, WA-RD 396.1, September 1996, WSDOT and USDOT, Federal Transit Administration.

NCHRP 155, *Bus Use of Highways, Planning and Design Guidelines*.

NCHRP 414, *HOV Systems Manual*.

1055.03 Definitions

flyer stop a transit stop inside the limited access boundaries.

high occupancy vehicle (HOV) Vehicles that fit one of the following:

- Rubber tired municipal transit vehicles.
- Buses with a carrying capacity of sixteen or more persons, including the operator.
- Motorcycles.
- Recreational vehicles that meet the occupancy requirements of the facility.
- All other vehicles that meet the occupancy requirements of the facility, except trucks in excess of 10,000 lb gross vehicle weight.

HOV direct access facility a ramp and its connection directly to an HOV lane, exclusively for the use of high occupancy vehicles to move between the ramp and the HOV lane without weaving across general-purpose lanes.

intelligent transportation systems (ITS) a system of advanced sensor, computer, electronics, and communication technologies and management strategies - in an integrated manner – to increase the safety and efficiency of the surface transportation system.

ramp a short roadway connecting a main lane of a highway with another facility, such as a road, parking lot, or transit stop, for vehicular use.

ramp connection the pavement at the end of a ramp, connecting to a main lane of a highway.

ramp terminal the end of a ramp at a local street or road, transit stop, or park and ride lot.

transit stop a facility for loading and unloading passengers that is set aside for the use of transit vehicles only.

transit vehicle a bus or other motor vehicle that provides public transportation (usually operated by a public agency).

1055.04 HOV Access Types and Locations

To provide direct access for high occupancy vehicles from the HOV lane to a passenger loading facility, there are many options and many constraints. Following are some of the options (selected as being usable on Washington's freeways) and constraints to their use.

To select an option, it is necessary to first establish the need, choose possible locations, evaluate site features (such as terrain, existing structures, median widths), and evaluate existing HOV information (such as lanes, park and ride facilities, transit routes and schedules, and origin and destination studies). The chosen location must meet access point spacing requirements and must be proven not to degrade traffic operations on the main line.

Important constraints to transit stop designs are that passenger access routes and waiting areas must be separated from freeway traffic, passenger access to a bus is on its right side only, and passenger access to a loading platform must accommodate the disabled.

(1) Freeway Ramp Connection Locations

(a) **Spacing**

For minimum ramp connection spacing see Chapter 940. Include only left-side connections, in this evaluation.

However, traffic operations can be degraded by the weaving caused by a left-side on-connection followed closely by a right-side off-connection (or a right-side on-connection followed by a left-side off-connection). As a general rule, if the spacing between the HOV direct access ramp and the general-purpose ramp is less than one gap acceptance length [1055.05(6)(c)] per lane, make the HOV lane buffer separated. (See Chapter 1050.)

Conduct an analysis to ensure that the new ramp will not degrade traffic operations. See Chapter 1425 for the studies and report required for a new access point.

When an off-connection follows an on-connection, provide full speed-change lane lengths and tapers or at least sufficient distance for full speed-change lanes that connect at full width with no tapers. See 1055.05(6) and 1055.05(7). An auxiliary lane can be used to connect full-width speed-change lanes if there is not sufficient distance for both tapers.

(b) **Sight Distance**

Locate both on- and off-connections to the main line where decision sight distance exists on the main line. (See Chapter 650.)

(2) Ramp Terminal Locations

(a) **Local Streets and Roads**

Access to the HOV lane can be provided by a ramp that terminates at a local street or road. The local street or road may incorporate HOV lanes, but they are not required. See 1055.07 for signing and pavement markings.

Consider traffic operations on the local road. Locate the terminal where:

- It will have the least impact on the local road.
- Intersection spacing requirements are satisfied.
- Queues from adjacent intersections will not block the ramp.
- Queues at the ramp will not block adjacent intersections.
- Wrong way movements are discouraged.

When off-ramps and on-ramps are opposite each other on the local road, consider incorporating a transit stop with the intersection.

(b) **Park and Ride Lots**

HOV direct access ramps that connect the HOV lane with a park and ride lot provide easy access for express transit vehicles between the HOV lane and a local service transit stop at the park and ride facility. Other HOV traffic using the access ramp must enter through the park and ride lot, which can create operational problems.

(c) **Flyer Stops**

Median flyer stops do not provide general access to the HOV lane. Access is from the HOV lane to the transit stop and back to the HOV lane. No other vehicle access is provided. Ramps to and from the flyer stops are restricted to transit vehicles only.

(3) Ramp Types

(a) **Drop Ramps**

Drop ramps are generally straight, staying in the median, and connecting the HOV lane with a local road or flyer stop (Figure 1055-3).

(b) **T Ramps**

A T ramp is a median ramp, serving all four HOV access movements, that comes to a T intersection within the median, usually on a structure. The structure then carries the HOV ramp over the freeway to a local road or directly to a park and ride lot (Figure 1055-4). Through traffic is not permitted at the T; therefore, flyer stops are not allowed.

(c) **Flyover Ramps**

A flyover ramp is designed to accommodate high speed traffic by using flat curves as the ramp crosses from the median over one direction of the freeway to a local road, a park and ride lot, or an HOV lane on another freeway (Figure 1055-5).

(4) Transit Stops

(a) **Flyer Stops**

Flyer stops are transit stops inside the limited access boundaries for use by express transit vehicles using the freeway. They may be located in the median at the same grade as the main roadway or on a structure, on a ramp, or on the right-side of the main line.

The advantage of a median flyer stop is that it reduces the time required for express transit vehicles to serve intermediate destinations. A disadvantage is that passengers must travel greater distances to reach the loading platform.

With left-side HOV lanes, flyer stops located on the right side will increase the delay to the express transit vehicles by requiring them to cross the general-purpose lanes. However, these stops improve passenger access from that side of the freeway.

See Chapter 1060 for additional design information.

1. **Side-Platform Flyer Stops** Side-platform flyer stops are normally located in the median (Figure 1055-6) and have two passenger loading platforms, one on each side between the bus loading lane and the through HOV lane. This design provides the most direct movement for the express transit vehicle and is the preferred design for median flyer stops.

This design is relatively wide. Where space is a concern, consider staggering the loading platforms longitudinally.

Consider tall barrier to divide the directions of travel or staggering the loading platforms to prevent unauthorized at-grade movement of passengers from one platform to the other. (See 1055.07(1).)

2. **At-Grade Passenger Crossings** This design is similar to the side-platform flyer stop, except that passengers are allowed to cross, from one platform to the other, at-grade (Figure 1055-7). This design might eliminate the need for passenger access to one of the loading platforms with a ramp or an elevator and simplifies transfers. The passenger crossing necessitates providing a gap in the barrier for the crosswalk.

Only transit vehicles are allowed. Passenger/pedestrian accommodations must comply with the ADA.

Consider an at-grade passenger crossing flyer stop only when passenger volumes are expected to be low. Design at-grade passenger crossing flyer stops as the first stage of the stop, with the ultimate design being side-platform flyer stops with grade separated access to both platforms.

3. **Ramp Flyer Stops** When ramp flyer stops are located on an HOV direct access drop ramp (Figure 1055-8), the delay for the express transit vehicle will not be much more than that for a median stop, and passenger access and connectivity to local service transit routes, on the local street or road, are improved. A flyer stop on a right-side ramp works well with right-side HOV lanes and diamond interchanges in which express transit vehicles can use the off-ramp to connect with a bus route on the local road and the on-ramp to return to the HOV lane. However, a stop on a general-purpose right-side ramp with a

left-side HOV lane will increase the delay by requiring the express transit vehicle to use the general-purpose lanes and possibly degrade main line traffic operations by increasing weaving movements.

(b) **Off-Line Transit Stops**

1. **Park and Ride Stops** Transit stops located at park and ride lots provide transfer points between the express transit system and the local transit system, and there is convenient passenger access to the park and ride lot. When a direct access ramp is provided, express transit delays from the HOV lane to the stop are reduced. These delays can be reduced more by providing a median flyer stop with passenger access facilities connecting the park and ride lot to the flyer stop; however, this might be more inconvenient for the passengers.

2. **Stops at Flyer Stop Passenger Access Points** To minimize the distance a passenger must travel between express and local service transit stops, locate local system transit stops near passenger access facilities for the flyer stops (Figure 1055-9).

(5) Enforcement Areas

For HOV facilities to function as intended, it is necessary to enforce the vehicle occupancy requirement. Law enforcement officers need areas for observation that are near pull-out areas where both the violator and the officer can pull safely out of the traffic flow.

Consider locating observation and pull-out areas near any point where violators can enter or exit an HOV direct access facility. Examples of potential locations are:

- Freeway on- and off-connections for HOV direct access ramps.
- HOV direct access ramp terminals at parking lots.

For freeway HOV lanes, locate enforcement areas on the adjacent shoulders so officers and violators are not required to cross several lanes of traffic.

Enforcement area guidance and designs are in Chapter 1050.

1055.05 Direct Access Geometrics

HOV direct access ramps are different from other ramps because they are frequently on the left-side of the through lanes and they have a high percentage of buses. Design right-side HOV direct access using the procedures given in Chapter 940. The following procedures are for the design of left-side HOV direct access.

Because left-side ramps are rare and are therefore less expected, signing is an important issue. (See 1055.07(2), for signing requirements.)

When the bus percentage is high, there are several needs to be met.

- When a bus enters the through lanes from the left, the driver has a relatively poor view of the through traffic.
- A bus requires a longer distance to accelerate than other vehicles.
- A bus requires a longer deceleration length for passenger comfort.

For these reasons, use the following design values when designing left-side HOV direct access facilities.

(1) Design Vehicles

Use AASHTO's A-BUS vehicle for horizontal design.

Use AASHTO's BUS vehicle for vertical clearance 13.5 ft.

Use AASHTO's P vehicle for stopping sight distance.

See Chapters 910 and 1060 for vehicle descriptions, dimensions, and turning templates.

(2) Design Speeds

See Chapter 940 for the design speeds for the ramps. Use the design speed of the general-purpose lanes for the main line design speed.

(3) Sight Distance

Provide stopping sight distance per Chapter 650. This provides sight distance for an automobile. The longer distance required for a bus to stop is compensated for by the greater eye height of the driver with the resulting vertical curve length requirement about equal to that for an automobile.

Sag vertical curves may be shortened where necessary. See Chapter 630 for guidance.

(4) Grades

Grades for ramps are covered in Chapter 940. Deviations will be considered for:

- Downgrade on-ramps with grades increased by an additional 1%.
- Upgrade off-ramps with grades increased by an additional 2%.

These increased grades help when geometrics are restricted and assist transit vehicles with the acceleration when entering and the deceleration when exiting the freeway.

(5) Ramp Widths

(a) **Lane Widths**

Use widths for separated roadway HOV facilities, see Minimum Traveled Way Widths for Articulated Buses, in Chapter 1050.

On tangents, the minimum lane width may be reduced to 12 ft.

(b) **Shoulder Widths**

Ramp shoulder width requirements are modified as follows:

- The minimum width for the sum of the two shoulders is 10 ft for one-lane ramps and 12 ft for two or more lanes.
- One of the shoulders must have a width of at least 8 ft for disabled vehicles. The minimum for the other shoulder is 2 ft. See Chapter 710 for shy distance requirements at barrier.
- The wider shoulder may be on the left or the right as needed to best match the conditions. Maintain the wide shoulder on the same side throughout the ramp.

(c) **Total Ramp Widths**

Make the total width of the ramp (lane width plus shoulders) wide enough to allow an A-BUS to pass a stalled A-BUS. This width has two components:

- The vehicle width (U = 8.5 ft on tangent) for each vehicle.
- Lateral clearance (C = 2 ft) for each vehicle.

The vehicle width and the lateral clearance are about the width of an A-BUS from edge of mirror to edge of mirror.

Figure 1055-1 gives the minimum ramp width (W_R) at various radii (R) for an articulated bus. For ramp locations on a tangent section or on a curve with a radius greater than 150 ft, consider the W_R width when requesting a reduced lane or shoulder width. For ramp curves with a radius less than 150 ft, check the total ramp width and, if necessary, widen the shoulders to provide the W_R width.

R (ft)*	W_R (ft)
Tangent	21
500	23
400	23
300	24
200	26
150	27
100	30
75	34
50	40
* R is to the curve inside edge of traveled way	

Minimum Ramp Widths for Articulated Buses
Figure 1055-1

(6) On-Connections

(a) **Parallel On-Connections**

For left-side on-connections, use the parallel on-connection. See Figure 1055-10.

A parallel on-connection adds a parallel lane that is long enough for the merging vehicle to accelerate in the lane and then merge with the through traffic. This merge is similar to a lane change and the driver can use side and rear view mirrors to advantage.

(b) **Acceleration Lanes**

Figure 1055-11 gives the minimum acceleration lane length (L_A) for left-side HOV direct access on-connections.

The numerous buses using HOV direct access ramps must merge with high speed traffic. Acceleration lanes that are longer than normally required are needed.

For left-side on-connections, provide at least the normal 10 ft (14 ft preferred) wide left shoulder for the main line for a minimum length of 500 ft (1000 ft preferred) beyond the end of the on-connection taper. This gives additional room for enforcement, merging, and erratic maneuvers.

(c) **Gap Acceptance Length**

Gap acceptance length is a minimum distance traveled while a merging driver finds a gap in the through traffic and begins the merge. For left-side parallel on-connections the gap acceptance length is added to the acceleration length. The L_g values are given in Figure 1055-2. These values are larger than for right-side on-connections to account for drivers' visibility constraints.

Highway Posted Speed (mph)	Gap Acceptance Length L_g (ft)
45	550
50	625
55	700
60	775
65	850
70	925

Gap Acceptance Length for Parallel On-Connections

Figure 1055-2

(d) **Design of Urban On-Connections**

Design left-side HOV direct access on-connections in urban areas as follows:

1. Use the parallel design for all left-side on-connections.

2. Add the Gap Acceptance Length for Parallel On-Connections (Figure 1055-2) for a freeway speed of 60 mph to the acceleration length.

3. Use Acceleration Length for Buses (Figure 1055-11) with a 60 mph freeway speed and the ramp design speed [1055.05(2)] for acceleration length.

(e) **Design of Rural On-Connections**

Design left-side HOV direct access on-connections in rural areas using a freeway design speed as determined using Chapter 440.

(7) Off-Connections

(a) **Parallel Off-Connection**

The parallel off-connection (Figure 1055-12) is preferred for left-side direct access off-connections. For freeway to freeway off-connections, provide a parallel lane with a length sufficient for signing and deceleration. The desirable minimum length is not less than the gap acceptance length (Figure 1055-2).

(b) **Tapered Off-Connection**

The tapered off-connection may be used for off-connections with justification. See Chapter 940 for the design of tapered off-connections.

(c) **Deceleration Lanes**

Bus passenger comfort requires longer deceleration lanes. Use the deceleration lane lengths from Figure 1055-14 for HOV direct access facilities.

(d) **Design of Urban Off-Connections**

Design left-side HOV direct access off-connections in urban areas as follows:

1. Either the parallel (preferred) or the taper (with justification) design may be used.

2. Use the longer deceleration length of: the Deceleration Length for Buses (Figure 1055-14) from a 60 mph freeway speed to the ramp design speed [1055.05(2)], or the Minimum Deceleration Length given in Chapter 940 from the freeway design speed to the ramp design speed.

(e) **Design of Rural Off-Connections**

Design left-side HOV direct access off-connections in rural areas using a freeway design speed as determined using Chapter 440.

(8) Vertical Clearance

Vertical clearance for a structure over a road is measured from the lower roadway surface, including the usable shoulders, to the bottom of the overhead structure.

See Chapter 1120 for information on vertical clearance. For a new structure and for a new ramp under an existing structure, the minimum vertical clearance is 16.5 ft. A deviation will be considered for 14.5 ft minimum vertical clearance for a new HOV direct access ramp under an existing bridge.

The minimum vertical clearance for a pedestrian grade separation over any road is 17.5 ft.

(9) Flyer Stops

Design flyer-stop-ramp on-connections as given in 1055.05(6) and design off-connections as given in 1055.05(7). Flyer stop connections are included in the access point spacing discussed in 1055.04(1)(a).

Design the ramp to the flyer stop per 1055.05(3), 1055.05(4), and 1055.05(5).

The minimum width for the roadway at a flyer stop is 24 ft.

When a flyer stop is in the median, provide enough median width for the flyer stop roadway, the passenger facilities, and barrier separation without reducing the width of the through lanes or shoulders. (See 1055.06.)

The approval of a flyer stop requires the operational analysis portion of the Access Point Decision Report (Chapter 1425).

(10) T Ramps

A T ramp example and design is given on Figure 1055-15

1055.06 Passenger Access

When designing transit stops, accessibility (compliance with the ADA), safety, and the comfort of the passengers must be included. Minimize pedestrian/vehicle conflict points. Design the whole facility with security in mind by keeping lines of sight as open as possible. Traffic barriers, fencing, illumination, landscaping, seating, windscreens, shelters, enclosed walkways, telephones, and posted schedules are examples of factors that contribute to passenger safety and well-being. See Chapter 1060 for passenger amenities at transit stops.

(1) Passengers

To encourage use of the passenger access facility for an express transit stop, provide a route that is the shortest distance to travel from the park and ride lot, or local transit stop. Failure to do so might generate the use of undesirable shortcuts. To encourage local use of the passenger access facilities, provide direct access from surrounding neighborhoods.

To access a transit stop in the median or to move about within the facility, grade separations are required for all flyer stop designs except the at-grade crossing flyer stop. Consider stairways, ramps, elevators, and escalators, but provide at least one access for the disabled at every loading platform, as required by the American Disabilities Act of 1990. See Chapter 1025 for guidance when designing pedestrian grade separations.

The ADA Accessibility Guidelines for Buildings and Facilities includes: “Platform edges bordering a drop-off and not protected by platform screens or guard rails shall have a detectable warning … 24 inches wide running the full length of the platform drop-off.” See the Standard Plans for the detectable warning pattern.

In transit stops, at-grade crosswalks are only permitted in the at-grade crossing flyer stop layout described in 1055.04(4)(a)2. Use traffic calming techniques, such as horizontal alignment, textured pavement and crosswalk markings, barrier openings, and other treatments, to channelize pedestrian movements and slow the transit vehicle movements. Illuminate transit stop crosswalks. (See Chapter 840.)

Where at-grade crosswalks are not permitted, steps must be taken to minimize unauthorized at-grade crossings. Fencing, taller concrete traffic barrier, enclosed walkways, and ramps are examples of steps that may be taken.

(2) Bicycles

Bike lanes on nearby streets and separate trails encourage people to bicycle from surrounding neighborhoods. Provide these bicyclists direct access to passenger access facilities.

For bike-bus-bike commuter access to a transit facility, design bicycle access facilities in conjunction with the access for the disabled. (See Chapters 1020 and 1025.)

Locate bicycle parking outside of the passenger walkways. See Chapter 1060.

Locations near colleges and universities and locations with good bicycle access, especially near trails, will attract bicyclists. Contact the region Bicycle Coordinator for information on the predicted number of bicycle parking spaces needed and the types of bicycle racks available.

1055.07 Traffic Design Elements

Traffic design elements are critical to the safe and efficient use of HOV direct access facilities. The following discusses the elements of traffic design that might be different for HOV direct access facilities.

(1) Traffic Barriers

Separate the main line from the HOV direct access facilities with a traffic barrier. Whenever possible, separate opposing traffic lanes in the facility by using traffic barrier. (See Chapter 710.) This is especially important in areas where opposing traffic is changing speeds to or from main line speeds. Concrete barrier is generally preferable on these facilities due to lower maintenance requirements.

The approach ends of traffic barriers must have crashworthy end treatments. In areas where the operating speed is greater than 35 mph, an impact attenuator is required. (See Chapter 720.) Consider concrete barrier and low maintenance impact attenuators, such as the REACT 350 or QuadGuard Elite, where there is a potential for frequent impacts, such as in gore areas.

When the operating speed is 25 mph or less, and where an at-grade pedestrian crossing transit stop has an opening in a concrete barrier, a sloped-down end as shown in the Standard Plans is acceptable.

When a break in the barrier is required for turning maneuvers, consider the sight distance requirements when determining the location for stopping the barrier. (See Chapter 650.)

In areas where headlight glare is a concern, consider glare screens, such as taller concrete barrier. Other glare screen options that mount on the top of a barrier tend to be high maintenance items and are discouraged.

Taller barrier might also be desirable in areas where pedestrian access is discouraged such as between opposing flyer stops and between a flyer stop and the main line.

(2) Signing

It is essential that the design and placement of HOV signing clearly indicate whether the signs are intended for motorists in the HOV lane or the general-purpose lanes. The purposes of the signs include:

- To enhance safety.
- To convey the message that HOV lanes are restricted to HOVs.
- To provide clear directions for entrances and exits.
- To define vehicle occupancy requirements or other restrictions.

Because HOV facilities are not found in many regions, the signing not only considers the commuter but also the occasional user of the facility who might be unfamiliar with the HOV facility and its operation.

(a) **Safety**

Much of HOV signing relates to enhancing safety for the motorists. Not only are geometrics often minimized due to the lack of right of way, but there are unusual operational characteristics such as the differential speed between the HOV vehicle and the adjacent general purpose traffic. The lack of passing opportunities in the HOV lane and the necessity for frequent merging and weaving actions require designers to use messages that are clear and concise, and use symbols wherever possible.

Because left-side off-connections are unusual, advance warning signing that an exit is on the left becomes more important.

For T ramps, provide traffic control at the T to assign priority to one of the conflicting left-turn movements and to avert wrong way movements.

(b) **Diamond Symbols**

The diamond symbol is used to designate all HOV facilities where carpools are allowed. For all signs, whether regulatory, guide, or warning, the symbol is always white on a black background to convey the restrictive nature of the HOV lane and to make the signs more uniformly recognizable. The use of the symbol with all HOV signs also informs drivers that the message is intended for HOVs. The diamond symbol is only for HOV lanes where carpools are allowed, not used for bus, taxi, or bicycle preferential lanes.

(c) **Selection and Location**

The signing details, Figures 1055-16 through 17b, provide for the HOV geometric configurations used within the right of way. Signing for other types of HOV facilities (such as those used for reversible-flow, and HOV direct access between freeways and temporary HOV lanes used during construction) is designed on a case-by-case basis requiring consultation with the appropriate Headquarters and region traffic personnel. The design of signing for HOV direct access between freeways will include HOV guide signs, both advance and action, in addition to the normal regulatory signs.

(d) **Regulatory Signs**

Regulatory signs for HOV facilities follow the normal regulatory signing principles; black legend with a white reflective background on a rectangular panel. Keep in mind that messages conveyed by the HOV signs (such as signs concerning violations and those indicating the beginning of an HOV lane downstream) are not necessarily intended only for the HOV vehicle. Therefore, it might be prudent to place additional signs on the right side of the freeway where this conforms to sound engineering practice.

(e) **Guide Signs**

Guide signs for the HOV facilities are generally used at intermediate on and off locations to inform HOV motorists of upcoming freeway exits and the appropriate location to exit the HOV lane. For HOV direct access to and from arterials, guide signs are used in a fashion similar to normal arterial interchange signing practice. The guide signs for HOV facilities have a black nonreflective legend on a white reflective background. The exception is the diamond, where the white reflective symbol is on a black nonreflective background. For all HOV related guide signs, the diamond is placed in the upper left-hand corner of the sign.

(3) Lighting

Illumination of HOV direct access facilities is required for ramps, loading platforms at transit stops, major parking lots, and walkways as defined in Chapter 840.

(4) Intelligent Transportation Systems

Intelligent transportation systems (ITS) are used to collect traffic data, maintain freeway flow, and disseminate traveler information. Transit information systems for passengers and transit facility surveillance are not normally a part of WSDOT's ITS system, but implementation of these components may be considered for some locations.

Design of HOV direct access facilities, like all HOV facilities, should fully utilize available ITS elements. Need for ITS elements vary depending on project features, such as facility design and operation, and whether the site has existing ITS components.

ITS elements that might be applicable to HOV direct access facilities include: closed circuit television surveillance, ramp metering, data collection, exit queue detection and override, dynamic signing, transit signal priority, and automatic vehicle identification and location.

Guidance on the development of ITS elements is found in Chapter 860. Include the region's Traffic Office, transit operator, and affected local agency in the coordination for design and implementation of ITS elements.

1055.08 Documentation

A list of the documents that are to be preserved [in the Design Documentation Package (DDP) or the Project File (PF)] is on the following web site: http://www.wsdot.wa.gov/eesc/design/projectdev/

Photograph from *FHWA/PB HOV Interactive 1.0 High Occupancy Vehicle Data Base from the U.S., Canada and Europe*

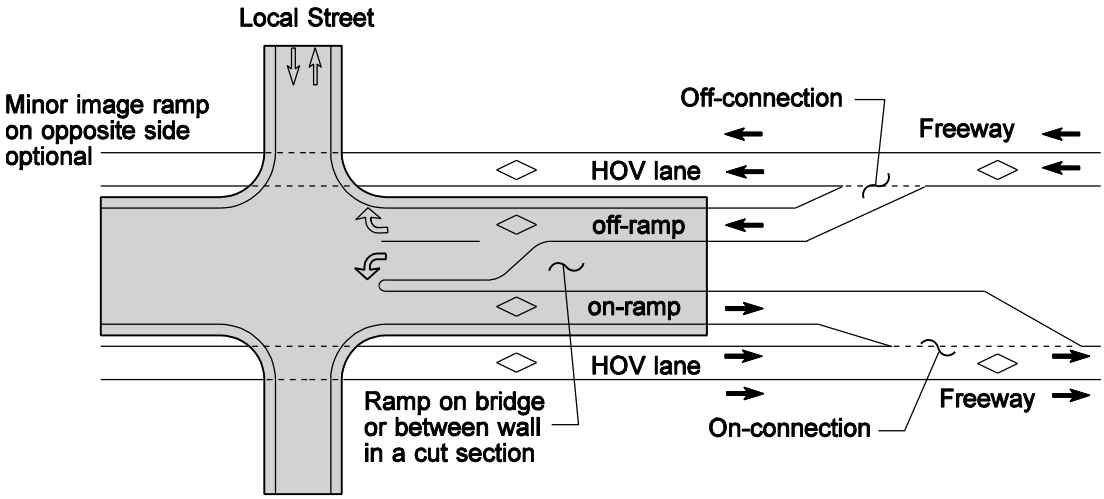

Drop Ramp

Figure 1055-3

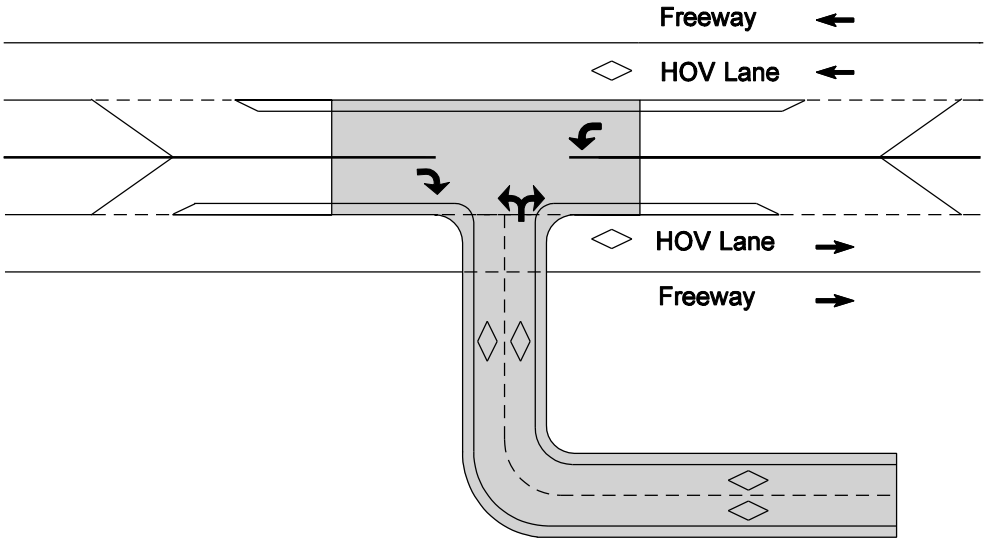

See Figure 1055-15 for additional design information.

T Ramp
Figure 1055-4

Photograph from *FHWA/PB HOV Interactive 1.0 High Occupancy Vehicle Data Base from the U.S., Canada and Europe*

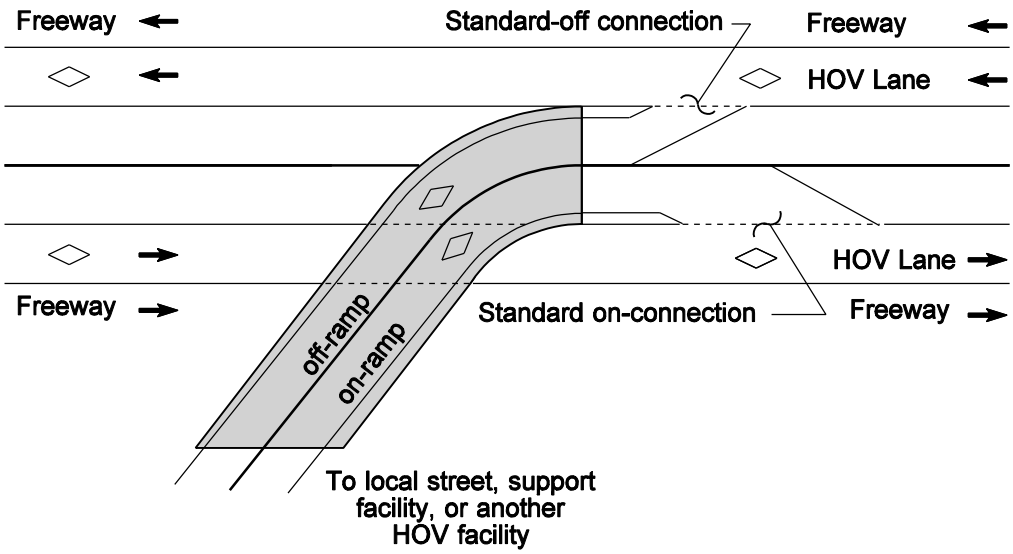

Flyover Ramp
Figure 1055-5

Photograph from *FHWA/PB HOV Interactive 1.0 High Occupancy Vehicle Data Base from the U.S., Canada and Europe*

The side platform flyer stop with grade separated access to each platform is the preferred design.

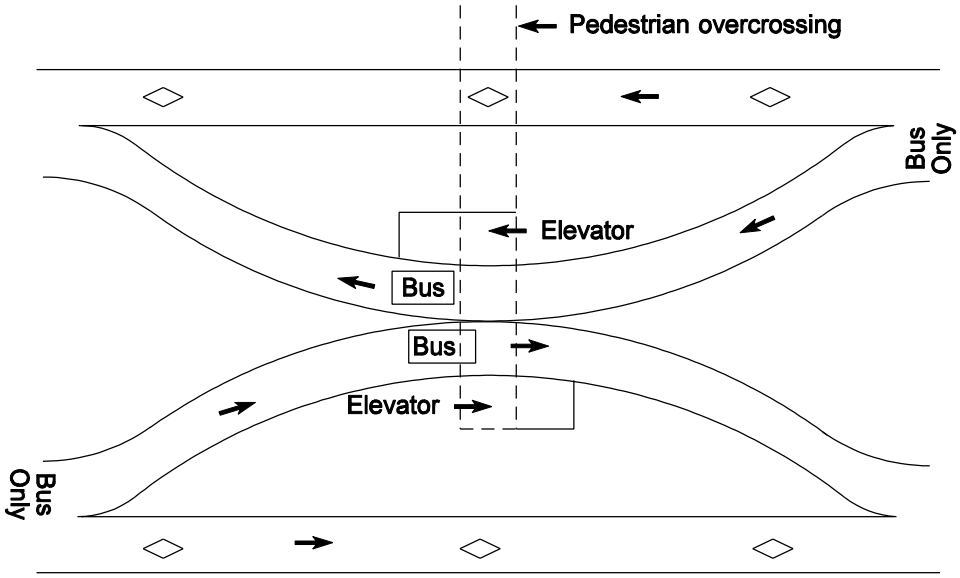

Side Platform Flyer Stop
Figure 1055-6

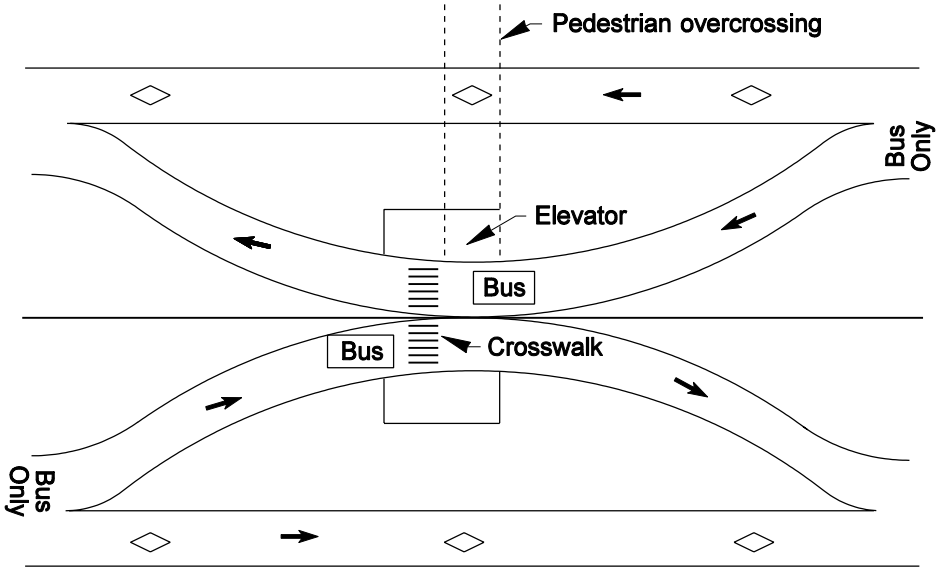

Consider flyer stops with at-grade pedestrian crossing only when anticipated volumes are low. The design must allow for the future addition of grade separated access to both platforms. See side platform flyer stop design, Figure 1055-6.

Photograph from *FHWA/PB HOV Interactive 1.0 High Occupancy Vehicle Data Base from the U.S., Canada and Europe*

At-Grade Crossing Flyer Stop
Figure 1055-7

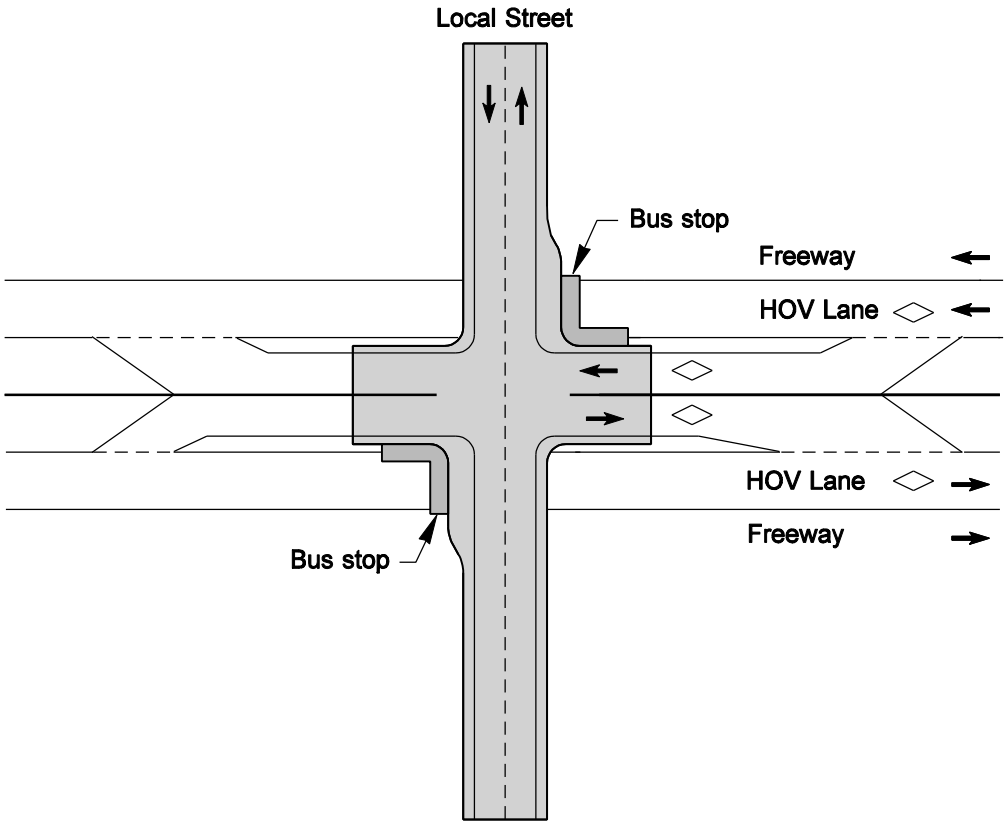

Transit Stops at Ramps
Figure 1055-8

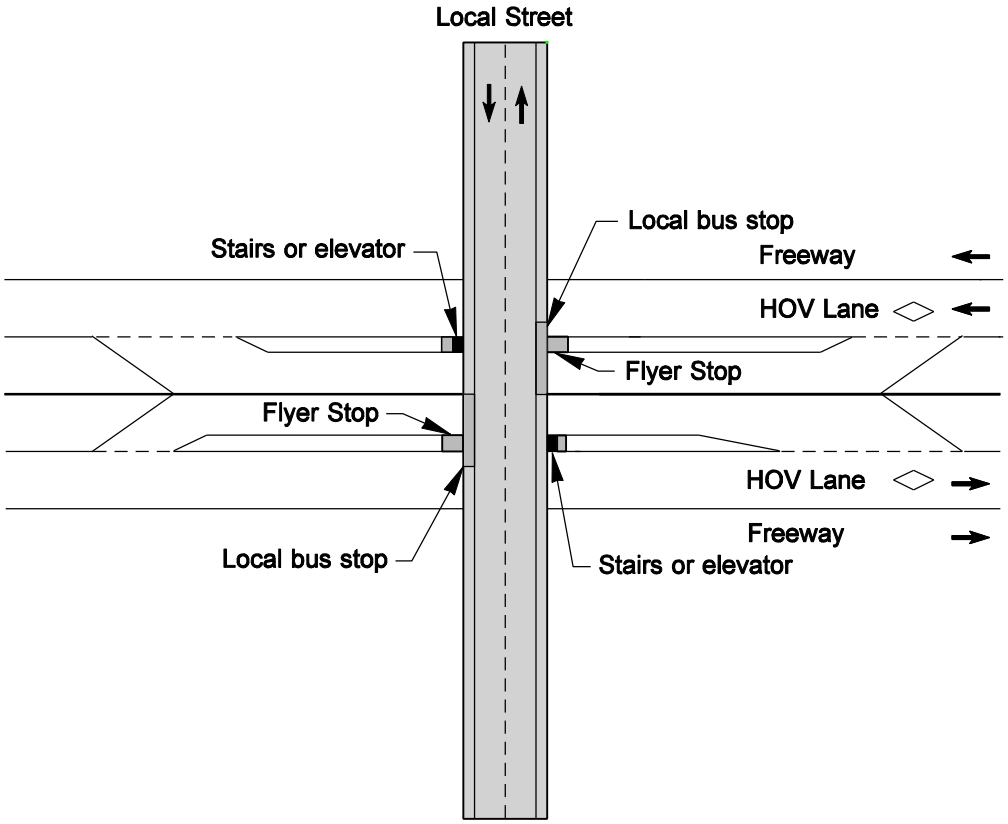

Other Transit Stops
Figure 1055-9

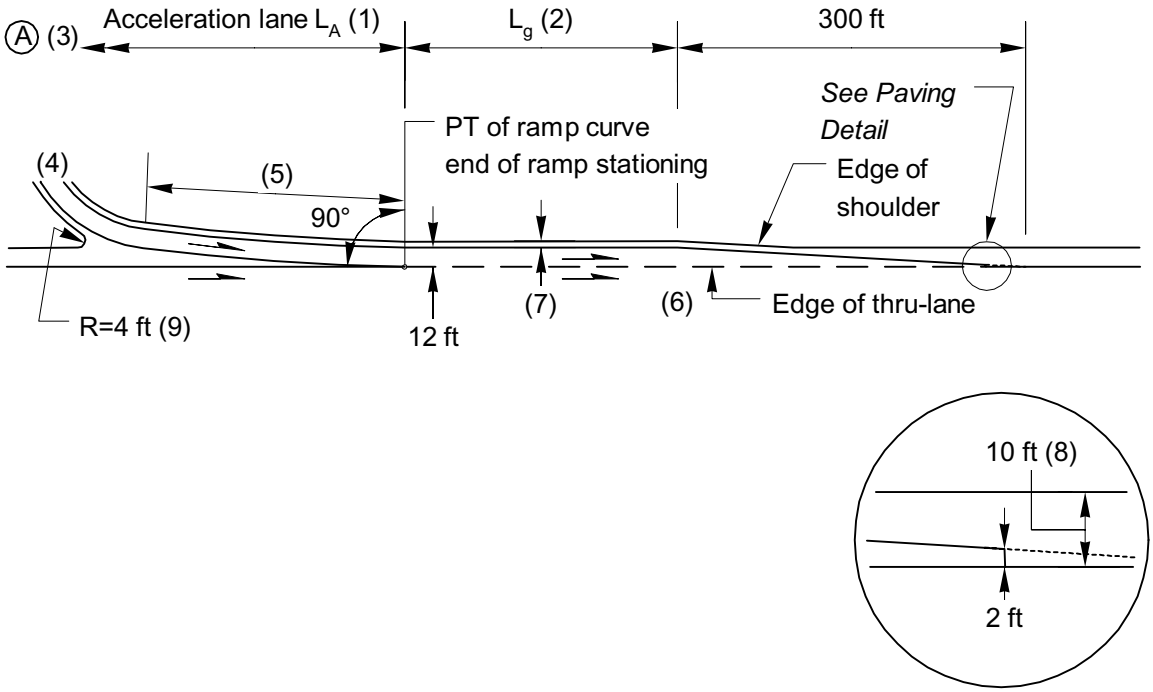

Paving Detail

Notes:

(1) See Figure 1055-11 for acceleration lane length L_A.
Check L_A for each ramp design speed.

(2) L_g is the gap acceptance length. Begin L_g at the beginning of the parallel lane, as shown, but not before the end of the acceleration lane L_A. See Figure 1055-2 for the length L_g.

(3) Point Ⓐ is the point controlling the ramp design speed or the end of the transit stop zone or other stopping point.

(4) See 1055.05(5) for ramp lane and shoulder widths.

(5) A transition curve with a minimum radius of 3,000 ft is desirable. The desirable length is 300 ft. When the main line is on a curve to the right, the transition may vary from a 3,000 ft radius to tangent to the main line. The transition curve may be replaced by a 50:1 taper with a minimum length of 300 ft.

(6) Angle point for width transitions, when required. See Chapter 620 for pavement transitions.

(7) See 1055.05(5)(b) for ramp shoulder width.

(8) The 10 ft left shoulder is the minimum width; 14 ft is preferred. Maintain this shoulder width for at least 500 ft; 1,000 ft is preferred.

(9) Radius may be reduced when concrete barrier is placed between the ramp and main line.

(10) For striping, see the Standard Plans.

Single Lane Parallel On-Connection
Figure 1055-10

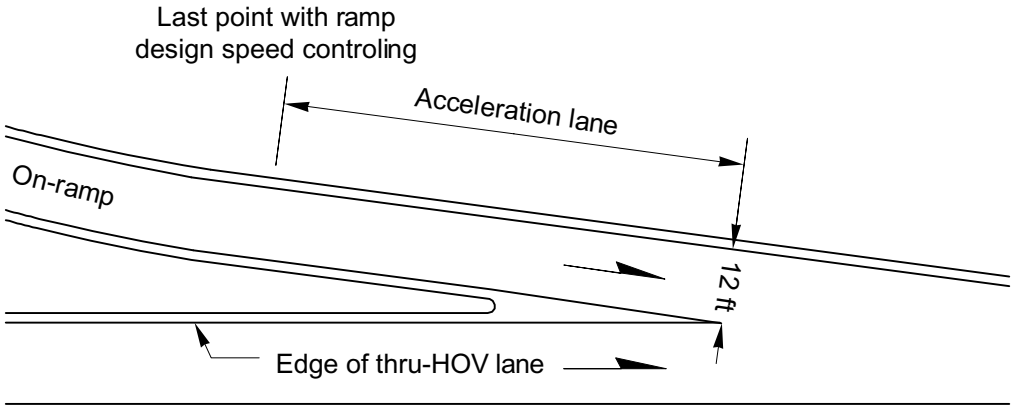

Freeway Speed (mph)	Ramp Design Speed								
	0	15	20	25	30	35	40	45	50
40	555	480	420	340	185				
45	835	760	700	615	470	290			
50	1230	1160	1100	1020	865	685	310		
55	1785	1715	1655	1575	1420	1235	875	410	
60	2135	2085	2040	1985	1875	1735	1440	995	460
70	3045	3015	2985	2945	2860	2745	2465	2050	1515
80	4505	4465	4420	4370	4250	4095	3745	3315	2780

Acceleration Length (L_A) for Buses (ft)

For the adjustment factors for grade, see Acceleration lane length in Chapter 940.

HOV Direct Access Acceleration Lane Length
Figure 1055-11

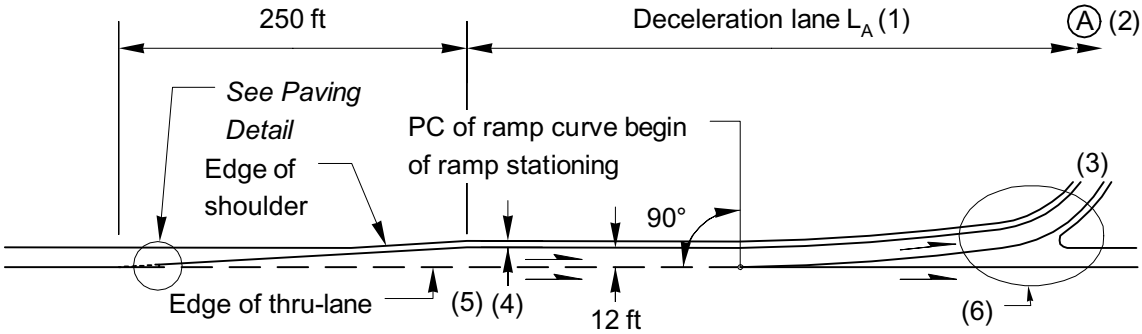

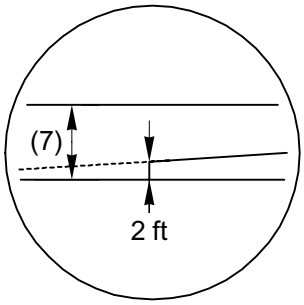

Paving Detail

Notes:

(1) See Figure 1055-14 for deceleration lane length L_D.
Check L_D for each ramp design speed.

(2) Point Ⓐ is the point controlling the ramp design speed or the end of the transit stop zone or other stopping point.

(3) See 1055.05(5) for ramp lane and shoulder widths.

(4) See 1055.05(5)(b) for ramp shoulder width.

(5) Angle point for width transitions, when required. See Chapter 620 for pavement transitions.

(6) Gore area details at drop ramp connections (Figure 1055-3) are shown on Figure 1055-13. See Chapter 940 for gore details at other connection types.

(7) The desirable shoulder width is 10 ft.

(8) For striping, see the Standard Plans.

Single Lane Parallel Off-Connection
Figure 1055-12

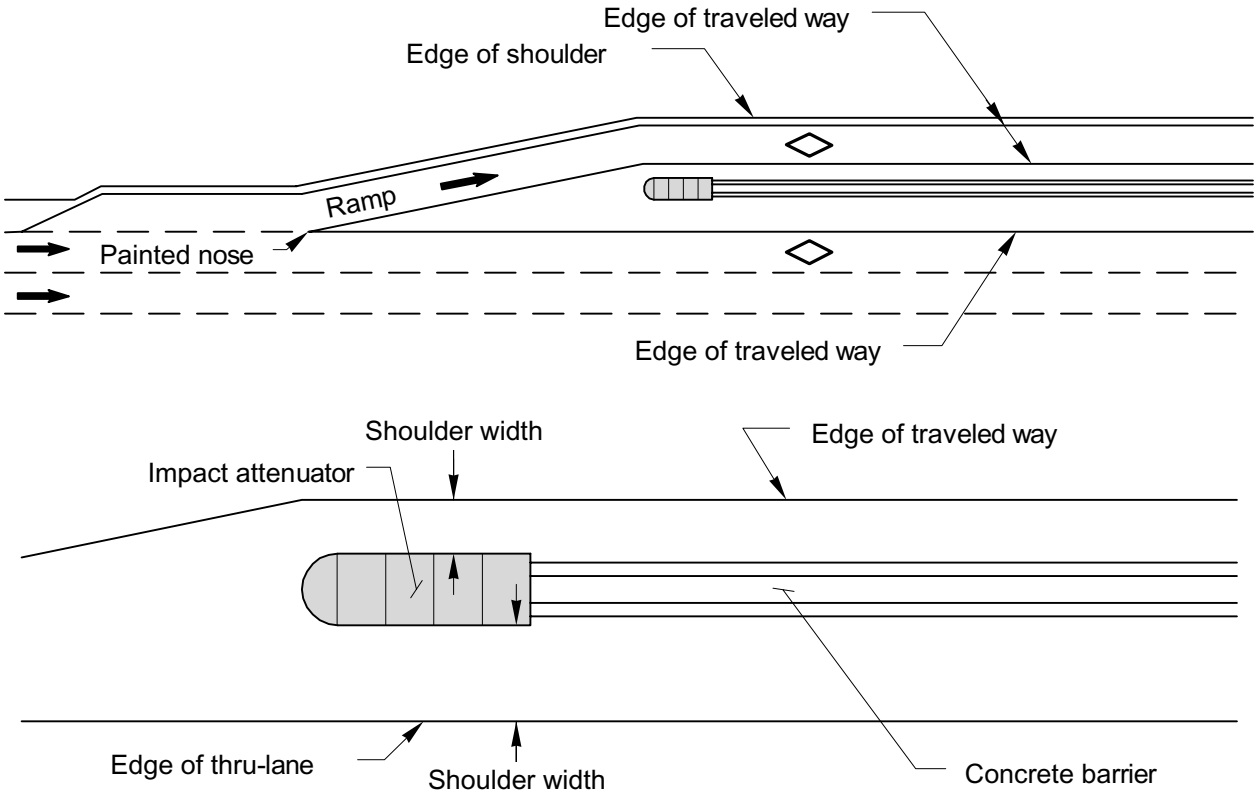

Drop Ramp Gore Area Characteristics
Figure 1055-13

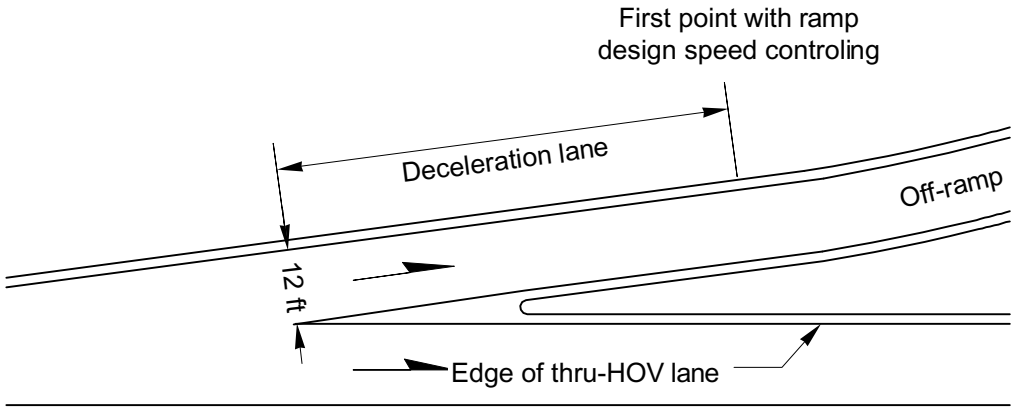

Highway Speed (mph)	Ramp Design Speed (mph)								
	0	15	20	25	30	35	40	45	50
40	390	330	290	240	170	100			
45	470	420	380	330	260	190	90		
50	570	520	480	430	360	290	190	100	
55	680	620	590	540	470	400	300	210	110
60	800	740	700	660	580	520	420	330	230
70	990	930	900	850	780	710	610	520	420
80	1210	1150	1110	1060	990	920	830	740	640

Deceleration Length (LD) for Buses (ft)

For the adjustment factors for grade, see deceleration lane length in Chapter 940.

Deceleration Lane Length for Buses
Figure 1055-14

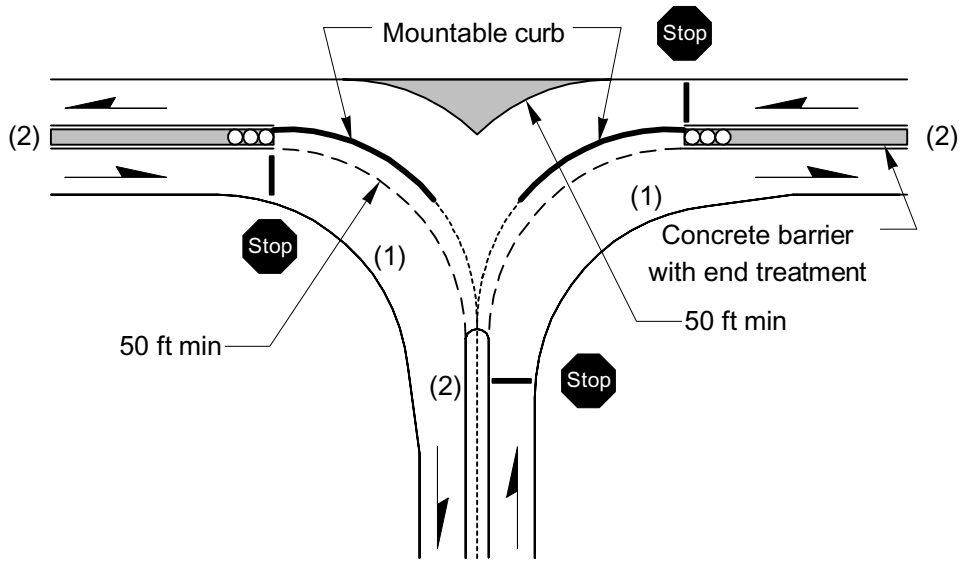

Notes:

(1) See Chapter 910 for intersection corner design. Use the right-turn corner design for the WB-40 for both the left and right turns.

(2) See 1055.05(5) for ramp lane and shoulder widths.

T Ramp Design

Figure 1055-15

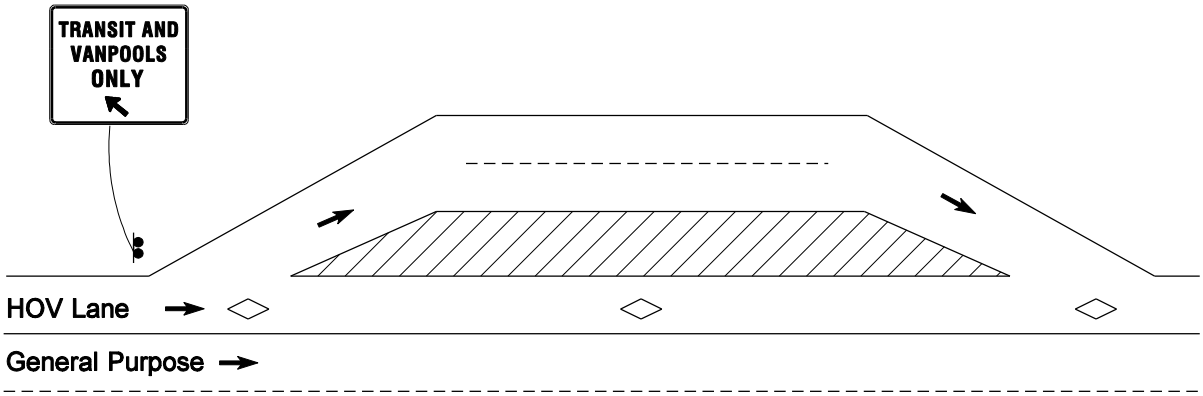

Typical Signing for Flyer Stop

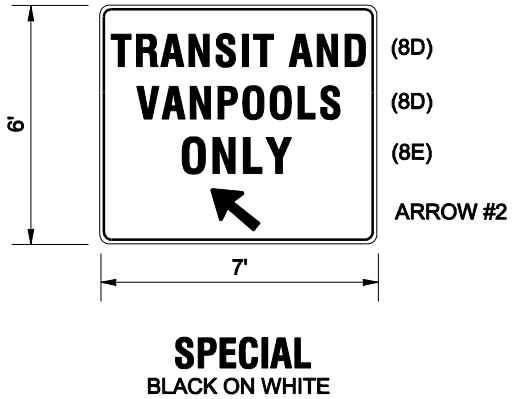

Special Flyer Stop Sign

Flyer Stop Signing
Figure 1055-16

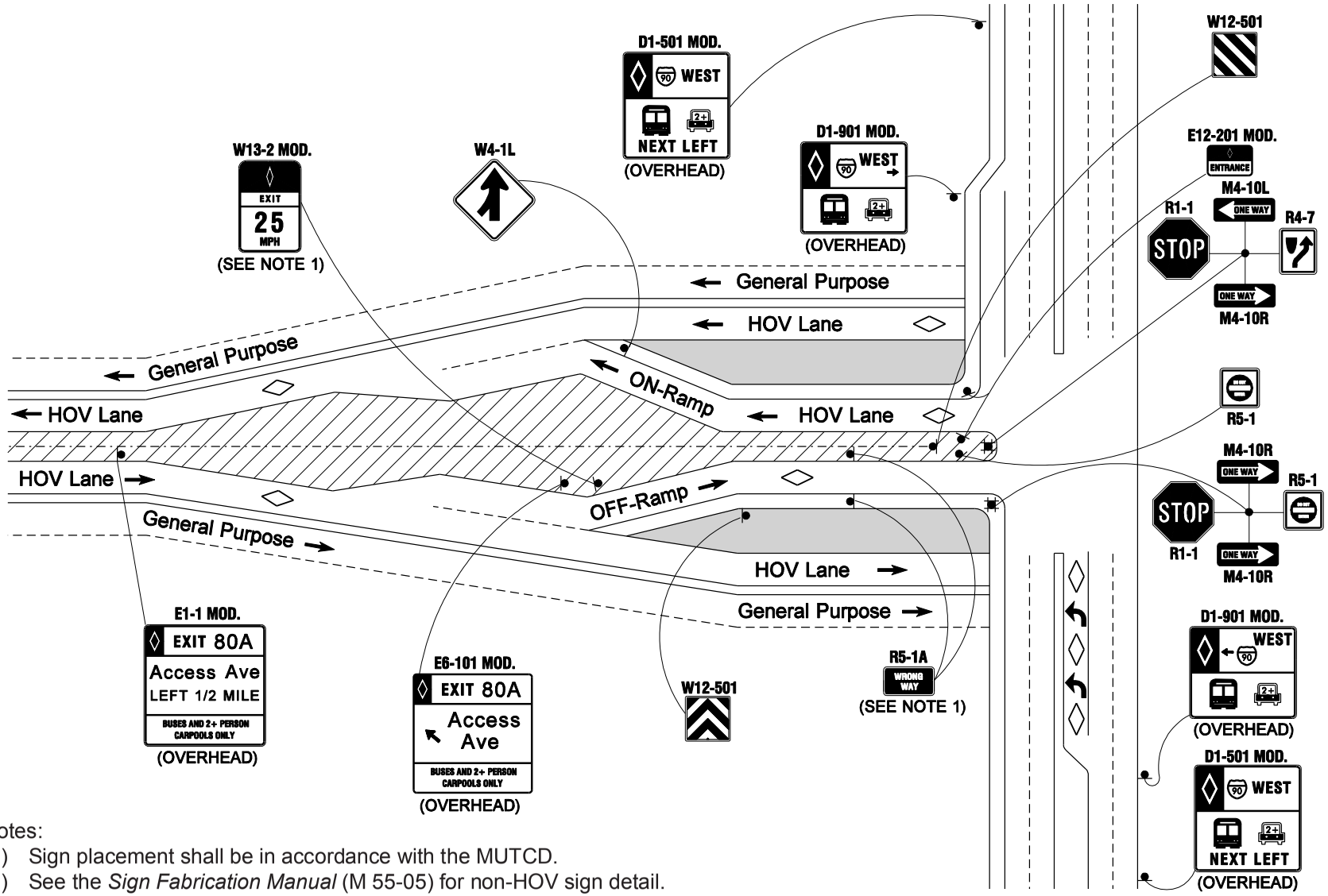

Notes:

(1) Sign placement shall be in accordance with the MUTCD.
(2) See the *Sign Fabrication Manual* (M 55-05) for non-HOV sign detail.
(3) See Figure 1055-17b for modified sign details.

HOV Direct Access Signing
Figure 1055-17a

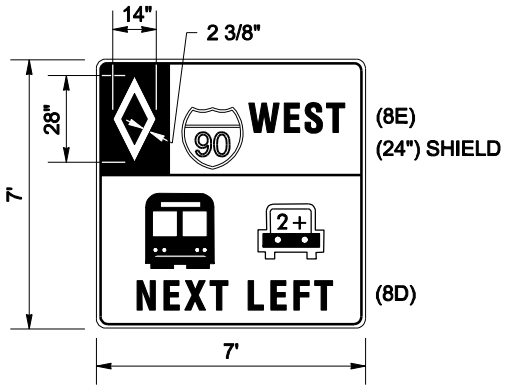

D1-501 MOD.
BLACK ON WHITE

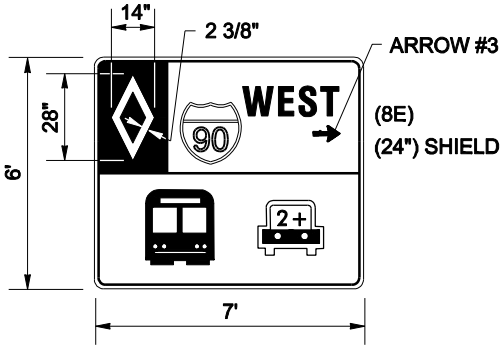

D1-901 MOD.
BLACK ON WHITE

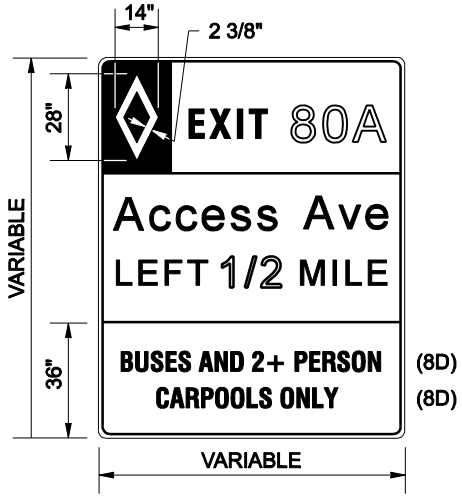

E1-1 MOD.
CODE D
BLACK ON WHITE

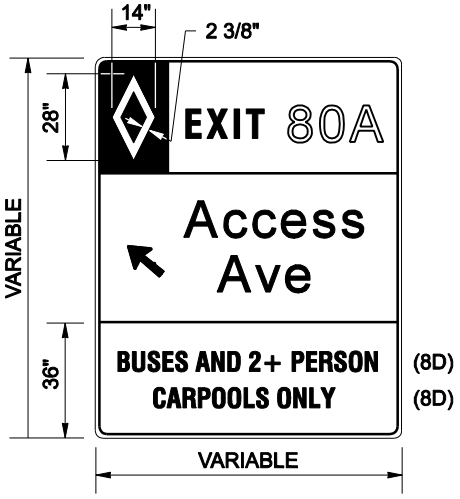

E6-101 MOD.
CODE D
BLACK ON WHITE

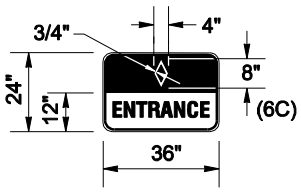

E12-201 MOD.
BLACK ON WHITE

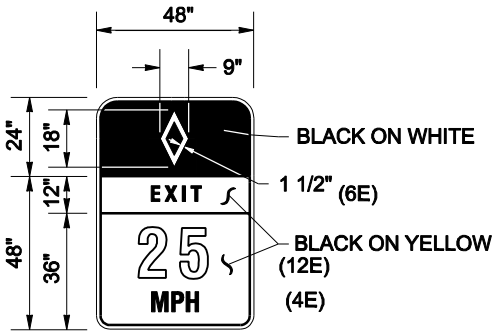

W13-2 MOD.

HOV Direct Access Signing
Figure 1055-17b

Chapter 1460 Fencing

1460.01 General
1460.02 References
1460.03 Design Criteria
1460.04 Fencing Types
1460.05 Gates
1460.06 Procedure
1460.07 Documentation

1460.01 General

Fencing is provided primarily to discourage encroachment onto the Washington State Department of Transportation's (WSDOT's) highway right of way from adjacent property and to delineate the right of way. It is also used to replace fencing that has been disrupted by construction and to discourage encroachment onto adjacent property from the highway right of way.

The reason for discouraging encroachment onto the right of way is to limit the presence of people and animals that might disrupt the efficient flow of traffic on the facility. Although not the primary intent, fencing does provide some form of separation between people, animals, the traffic flow, or other special feature and, therefore, a small measure of protection for each.

1460.02 References

*Plans Preparation Manua*l, M 22-31, WSDOT

Roadside Manual, M 25-30, WSDOT

Standard Plans for Road, Bridge, and Municipal Construction (Standard Plans), M 21-01, WSDOT

Standard Specifications for Road, Bridge, and Municipal Construction (Standard Specifications), M 41-10, WSDOT

1460.03 Design Criteria

(1) General

Fencing on a continuous alignment usually has a pleasing appearance and is most economical to construct and maintain. The recommended practice is to locate fencing or, depending on terrain, 12 in. inside the right of way line.

Where the anticipated or existing right of way line has abrupt irregularities over short distances, coordinate with Maintenance and Real Estate Services personnel to dispose of the irregularities as excess property, where possible, and fence the final property line in a manner that is acceptable to Maintenance.

Where possible, preserve the natural assets of the surrounding area and minimize the number of fence types on any particular project.

(2) Limited Access Highways

On highways with limited access control, fencing is mandatory unless it has been established that such fencing may be deferred. Fencing is required between frontage roads and adjacent parking or pedestrian areas (such as at rest areas and flyer stops) and highway lanes or ramps unless other barriers are used to discourage access violations.

On new alignment in rural areas, fencing is not provided between the frontage road and abutting property unless the abutting property was enclosed prior to highway construction. Such fencing is normally part of the right of way negotiation.

Unless there is a possibility of access control violation, fencing installation may be deferred until needed at the following locations. (When in doubt, consult the Headquarters (HQ) Access and Hearings Engineer.)

- Areas where rough topography or dense vegetation provides a natural barrier.
- Along rivers or other natural bodies of water.
- In sagebrush country that is sparsely settled.
- In areas with high snowfall levels and sparse population.
- On long sections of undeveloped public or private lands not previously fenced.

(3) Managed Access Highways

Fencing is not required for managed access highways. When highway construction will destroy the fence of an abutting property owner, originally constructed on private property, the cost of such replacement fencing may be included in the right of way payment. When the fences of several property owners will be impacted, it may be cost-effective to replace the fences as part of the project.

If fencing is essential to safe operation of the highway, it will be constructed and maintained by the state. Examples of this are the separation of traveled highway lanes and adjacent facilities with parking or pedestrian areas such as rest areas and flyer stops.

(4) Special Sites

Fencing is often needed at special sites such as pit sites, stockpiles, borrow areas, and storm water detention facilities.

Fence storm water detention facilities and wetland mitigation sites when they are located outside highway right of way fencing.

Fencing is not normally installed around storm water detention ponds or wetland mitigation sites within the right of way fencing unless any one of the following conditions are met:

- The slopes into the storm water detention facility or wetland mitigation site are steeper than 3H:1V.
- The storm water detention facility or wetland mitigation site is located near a school, park, trail, or other facility frequented by children or the elderly.

Fencing proposed at sites that will be outside WSDOT right of way requires that local ordinances be followed if they are more stringent than WSDOT's.

Other special sites where fencing may be required are addressed in the following chapters:

- 1020 Bicycle Facilities
- 1025 Pedestrian Design Considerations
- 1120 Bridges

The type and configuration of the fence is determined by the requirements of each situation.

1460.04 Fencing Types

(1) Chain Link

Installation of chain link fence is appropriate for maximum protection against right of way encroachment on sections of high volume highways under the following conditions:

- Along an existing business district adjacent to a freeway.
- Between a freeway and an adjacent parallel city street.
- At locations where existing streets have been cut off by freeway construction.
- At industrial areas.
- At large residential developments.
- At military reservations.
- At schools and colleges.
- At recreational and athletic areas.
- At developed areas at the intersection of two limited access highways.
- At any other location where a barrier is needed to protect against pedestrian, bicyclist, or livestock encroachment in limited access areas.
- See Chapter 640 for roadway sections in rock cuts.

The Standard Plans contains details for the four approved types of chain link fence. The recommended uses for each type of fence are as follows:

(a) **Type 1.** A high fence for areas of intensified use, such as industrial areas, or school playgrounds. It is not to be used within the Design Clear Zone because the top rail of the fence is considered a hazard. (See Chapter 700.)

(b) **Type 3.** A high fence for use in suburban areas with limited existing development. It may be used within the Design Clear Zone.

(c) **Type 4.** A lower fence for special use, such as between the traveled highway lanes and a rest area or flyer stop, or as a rest area boundary fence if required by the development of the surrounding area. This fence may be used along a bike path or hiking trail to separate it from an adjacent roadway.

(d) **Type 6.** A lower fence used instead of Type 1 where it is deemed important not to obstruct the view toward or from areas adjacent to the highway. This fence is not to be used within the Design Clear Zone because the top rail of the fence is considered a hazard. (See Chapter 700.)

Coated galvanized chain link fence is available in various colors and may be considered in areas where aesthetic considerations are important. Coated ungalvanized chain link fence is not recommended.

(2) Wire Fencing

The Standard Plans and Standard Specifications contain details for the two approved types of wire fence. The recommended uses for each type of fence are as follows:

(a) **Type 1.** This fence is used in urban and suburban areas where improvements along the right of way are infrequent and future development is not anticipated. It may also be used adjacent to livestock grazing areas. The lower portion of this fence is wire mesh and provides a barrier to children and small animals.

(b) **Type 2.** This fence is used in farming areas to limit highway crossings by farm vehicles to designated approaches: in irrigation districts to prevent ditch riders, maintenance personnel, and farmers from making unauthorized highway crossings; and where new alignment crosses parcels previously enclosed by barbed wire.

(3) Other Considerations

Extremely tall fences (7 to 10 feet high) may be used in areas where there are exceptional hazards such as large concentrations of deer or elk. See the region's Environmental Office and the *Roadside Manual* concerning wildlife management.

Metal fencing can interfere with airport traffic control radar. When locating fencing in the vicinity of an airport, contact the Federal Aviation Administration to determine if metal fence will create radar interference at the airport. If so, use nonmetallic fencing.

Do not straddle or obstruct surveying monuments.

1460.05 Gates

Keep the number of fence gates along limited access highways to a minimum. On limited access highways, all new gates must be approved as described in Chapter 1425, "Access Point Decision Report."

Usually such gates are necessary only to allow highway maintenance personnel and operating equipment to reach the freeway border areas without using the through-traffic roadway. Gates may be needed to provide access to utility supports, manholes, and the like, located within the right of way.

Use gates of the same type as the particular fence, and provide locks to deter unauthorized use.

In highly developed and landscaped areas where maintenance equipment is parked outside the fence, provide the double gate indicated in the Standard Plans.

Where continuous fencing is not provided on limited access highways, Type C approaches are normally gated and locked, with a short section of fence on both sides of the gate.

1460.06 Procedure

Fencing is included in the access report, in accordance with Chapter 1430, and the PS&E, in accordance with the *Plans Preparation Manual*.

1460.07 Documentation

A list of documents that are to be preserved [in the Design Documentation Package (DDP) or the Project File (PF)] is on the following website: http://www.wsdot.wa.gov/eesc/design/projectdev/

A

ABSORB 350, 720-4
ABSORB 350 impact attenuator, 720-13
Acceleration lane, 910-8, 940-7, 1055-6
Access,
    hearing, 210-12, 1430-2, 1430-12
    hearing plan, 1430-2, 1430-3
    report plan, 1430-2, 1430-3
    roundabouts, 915-14
Access connection. *See* Managed access
    categories, 1435-7
    managed access, 1420-2, 1420-3
    permit, 1435-8
    spacing, 1420-2, 1435-14
    spacing, corner, 1420-3
Access control, 120-7, 1420-1
    achieving, limited, 1430-1
    definitions, 1420-2
    full, limited, 1430-3
    limited, 1420-1, 1430-1
    limits, 1430-15, 1430-16, 1430-17, 1430-18, 1430-19, 1430-20, 1430-21, 1430-22
    managed, 1420-1, 1435-1
    modified, limited, 1430-8
    partial, limited, 1430-5
    references, 1420-1
    tracking system, 1420-2, 1420-4, 1430-1, 1430-2, 1435-1,1435-2
    vocabulary, 1420-5
Access Point Decision Report (APD Report), 1055-1, 1425-1
    definitions, 1425-2
    documentation, 1425-10
    eight policy topics, 1425-3
    finding of engineering & operational acceptability, 1425-4
    flow chart, 1425-14, 1425-15
    limited access, 1430-3, 1430-12
    procedures, 1425-2
    references, 1425-1
    report and supporting analysis, 1425-4
    review levels, 1425-11, 1425-12
Accessible route, pedestrian, 1025-1
Accessible route, passenger, 1055-8
ADA, definition, 1025-1
ADIEM 350 impact attenuator, 720-4, 720-13
Administrative appeal hearing, 210-15
ADT (average daily traffic), 700-1
Agency Request Budget (ARB), 120-14
Airport System Plan, 120-12
Airport-highway clearance, 630-4
Alignment
    horizontal, 620-1
    monuments, 1450-2
    vertical, 630-1
Americans with Disabilities Act (ADA), 1025-1
Analysis
    corridor, 325-7
    deviation, 325-7
    evaluate upgrade, 325-7
    project, 325-7
    risk, 325-7
Approaches
    full access control, 1430-3
    limited access, 1420-2
    modified access control, 1430-8
    partial access control, 1430-5
    railroad, 1430-11
    road, 920-1, 1420-5
    types, 1430-7
Approval
    findings and order, 210-14
    materials source, 510-2
Assessing Impacts to Wildlife, 710-16
At grade intersections, 910-1
Arterial HOV, 1050-5, 1050-9
Audible warning signals, 1025-3
Auxiliary lanes, 620-4, 1010-1
    chain-up area, 1010-5
    climbing lanes, 1010-2
    emergency escape ramps, 1010-3
    left-turn, 910-6
    passing lanes, 1010-2
    railroad grade crossings, 930-2
    right-turn, 910-8
    shoulder driving for slow vehicles, 1010-3
    slow moving vehicle turnouts, 1010-3
    speed change, 910-8
    Two-way left-turn, 910-7

B

Barricades, 810-11

Barrier curbs, *See* vertical curbs
Barrier delineation, 830-5
Barrier terminal,
    buried terminals, 710-9
    flared terminal, 710-9
    nonflared terminal, 710-10
    other anchor, 710-10
    project requirements, 710-2
Barrier transition
    definition, 710-1
    project requirements, 710-2
Barriers, traffic, 710-1, 1055-9
    barrier deflections, 710-4
    definition, 710-1
    delineation, 830-5
    dragnet, 710-19
    flare rate, 710-5
    length of need, 710-6
    moveable, 810-10
    shared use path (bicycle), 1020-13
    shy distance, 710-4
    steel backed timber guardrail, 710-18
    stone guardwalls, 710-18
    water filled barriers, 810-9
Basic design level, 410-1
    minor safety and minor preservation work, 410-1
    required safety items of work, 410-1
Basic safety, 410-1
Beam guardrail. *See Guardrail*
Berms, earth
    noise wall, 1140-2
Bicycle Advisory Committee, 1020-4
Bicycle coordinator, 1020-1, 1020-3, 1020-7, 1020-17
Bicycle facilities, 1020-1, 1020-7, 1055-8
    access, 1020-6, 1430-5, 1430-8, 1430-10
    alignment, horizontal, 1020-13
    barriers, traffic, 1020-13
    bicycle parking, 1020-7
    bicycle route, 1020-1
    bike lane, 1020-1, 1020-4, 1020-16
    bike lanes cross freeway off and on-ramps, 1020-16
    bike route, 1020-17
    bikeway, 1020-1
    bollards, 1020-15
    bridges, 1120-4
    clearance, 1020-8, 1020-14, 1020-15
    crossings, 1020-9
    design clear zone, 1020-13
    design speed, 1020-13
    drainage, 1020-15
    drainage grates, 1020-17
    intersections, 1020-8
    lighting, 1020-7, 1020-15
    maintenance, 1020-6
    parking, 1020-16
    pavement markings, 1020-15 through 17
    planning, 1020-2
    railroad crossing, 1020-12
    roundabouts, 915-13
    Rules of the Road (RCW 46.61), 1020-3, 1020-16
    rural bicycle touring routes, 1020-2
    shared roadway, 1020-2, 1020-4, 1020-17
    shared use path, 1020-2, 1020-3, 1020-7 through 12
    sidewalks, 1020-4
    sight distance, 1020-14
    signed shared roadway, 1020-2
    signing, 1020-15
    State Highway System Plan, 1020-2
    storage facilities, 1020-7
    structures, 1020-7, 1020-14
    superelevation, 1020-13
    traffic signals, 1020-11, 1020-17
    tunnels, 1020-15
    undercrossings, 1020-15
    widths, 1020-8, 1020-15
Bollards, 1020-15
Borrow site. *See Sundry sites*
Boundaries, international, 1410-2
Brakemaster impact attenuator, 720-8
Bridge rails
    concrete safety shape, 710-19
    pedestrian, 1025-8
    project requirements, 710-3
    thrie beam bridge rail retrofit criteria, 710-19
    thrie beam retrofit, 710-17
Bridge site data, 1110-1
    check list, 1110-5
    stream crossings, 1110-2
Bridges, 1120-1
    approach slab, 1120-4
    design, 1120-1
    end slopes, 640-6

existing structures, 1120-1
geotechnical investigation, 510-11
horizontal clearance, 1120-2
location, 1120-1
medians, 1120-2
new structures, 1120-1
pedestrian and bicycle facilities, 1120-4
protective screening for highway structures, 1120-5
rail end treatment, 1120-4
railroad, 1120-2
site design elements, 1120-1
slope protection, 1120-5
slope protection at watercrossings, 1120-5
structural capacity, 1120-1
structure width, 440-9
vertical clearance, 1120-2
widths for structures, 1120-2
Bridle trail, 1020-1
Budgets, 120-14
Buffer strip, pedestrian, 1025-5
Buffer-separated HOV lanes, 1050-1, 1050-3 1050-9, 1050-11
Bulb out, 1025-1
Bus
passenger access, 1055-8
Bus facilities, 1060-1
access, 1430-5, 1430-7, 1430-10
berths, 1060-7
disabled accessibility, 1060-12
grades, 1060-11
intersection, 1060-11
lane widths, 1060-11
passenger amenities, 1060-10
paving sections, 1060-10
transfer/transit centers, 1060-6
turning path template, 1060-23, 1060-24, 1060-35, 1060-36
vehicle characteristics, 1060-11
Bus stops and pullouts, 1060-7
designation and location, 1060-7
far-side, 1060-8
flyer stops, 1055-4
flyer stop access points, 1055-5
mid-block, 1060-9
near-side, 1060-8
park and ride stops, 1055-5
placement, 1060-8
pullouts, 1060-9

C

Caissons, 1130-2
Cantilever sign supports, 820-3
Capacity
highway, 610-1
roundabouts, 915-7
Capacity analysis, 915-7
CAT impact attenuator, 720-1, 720-8
Categories, 915-1
Cattle passes, R/W, 1410-2
Center line rumble strips, 700-8
Central Island, 915-12
Certification of documents, 330-4
Chain link
fencing, 1460-2
gates, 1460-3
Chain-off areas, 1010-5
Chain-up areas, 1010-5
Channelization, 910-6
curbing, 910-10
devices, 810-11
islands, 910-9
left-turn lanes, 910-6
right-turn lanes, 910-8
shoulder, 910-9
speed change lanes, 910-8
Circulating roadway, 915-10
City streets, 440-4
Classification
functional, 440-3
terrain, 440-3
Clear run-out area, 700-1
Clear zone, 700-2
definitions, 700-1
Design Clear Zone, 700-2
distance table, 700-10
ditch section, 700-3
ditch section examples, 700-14
inventory form, 700-11, 700-12
recovery area, 700-2
recovery area example, 700-13
roundabouts, 915-13
Clearance. *See also Vertical clearance and Horizontal clearance*
airport-highway, 630-4
bikeway, 1020-8
Climbing lanes, 1010-2
Closed circuit television cameras (CCTV), 860-1
Cloverleaf, 940-3

Coast Guard, U.S. (USCG), 1110-3
permit, 1110-3
Collector, 440-16
Collector distributor roads, 940-9
Combined hearings, 210-15
Commercial road approach, 920-3
Communication towers
geotechnical investigation, 510-7
Comprehensive plans, 120-3, 120-5
Concrete barrier, 1055-9
concrete barrier terminals, 710-16
shapes, 710-15
Concurrent flow HOV lanes. *See* Nonseparated HOV lanes
Condemnations, 1410-5
Cones, 810-11
Connection. ***See*** Access connection
categories, 1435-7
permit, 1435-8
spacing, 1435-14
Connections, 940-6 through 9
managed access, 1420-2, 1420-3
Construction permits, 1410-3
Contour grading, 1310-1
Control monuments, 1450-2
Controllers, signal, 850-8
Corner clearance, 1420-3
Corner clearance, managed access, 1435-6
Corridor hearing, 210-11
Corridor or project analysis, 325-7
County roads, 440-4
Crash cushion. *See Impact attenuator*
Critical fill slope, 700-1
Cross sections
bridge end slopes, 640-6
drainage ditches in embankment areas, 640-6
encroachment (RR), 930-3
interchange ramp, 940-5
roadways, 640-2
rock cuts, 640-4
side slopes, 640-4
stepped slopes, 640-6
turning roadway width, 641-1
Cross slope, 430-2
roadways, 640-2
shoulders, 640-2
stepped slopes, 640-6
traveled way, 640-2
Crossing
railroad grade, 930-1
Crossovers, median, 960-1
Crossroads, 910-1, 910-4
ramp terminal intersections, 940-9
Crosswalks, 850-8, 1025-1
marked, 1025-6
unmarked, 1025-6
Crown slope for divided highways, 640-7
Culvert ends, 700-5
Curb cuts, 1020-12
shared use path, 1020-12
Curbs, 440-8, 910-10
Current Law Budget (CLB), 120-14
Curves
horizontal, 620-2
roadway widths, 641-1
vertical, 630-2
Cut slopes, 640-4, 700-4

D

Datums, surveying, 1440-2
DDS. *See Design Decision Summary*
Deceleration lane, 910-8, 940-8, 1055-7
Decision sight distance, 650-4
Delineation, 830-1
guide posts, 830-4
pavement markings, 830-1
traffic barriers, 830-5
wildlife warning reflectors, 830-5
Department of Defense (DOD), 1120-3
Design
elements, 325-5
exception (DE), 325-7
hearing, 210-12
level, 325-6
matrix procedures, 325-1
speed, 430-1, 440-1, 440-4, 940-4, 1055-5
variance, 325-7
vehicle, 430-3, 910-4, 1055-5
Design Clear Zone, 700-2 through 700-6
definition, 700-1
distance table, 700-10
ditch sections, 700-3
ditch section examples, 700-14
roundabouts, 915-13
Design considerations
road approaches, 920-2
Design Decisions Summary (DDS), 330-7
Design Exception (DE), 325-7, 330-4
documentation, 330-4
Design guidelines, 1320-1
Design level, 325-6

Design matrix, 325-1
Design Elements, 325-5
design level, 325-6
procedures, 325-1, 340-4
Project Type, 325-2
selecting, 325-1, 340-4
terminology in notes, 325-7
using a matrix, 340-4
Design process and permit interaction, 240-16
Design Speed, DM Supplement dated 3/25/2004
Design template, 920-2
Design Variance Inventory System (DVIS), 325-7
Developer initiated intersections, 910-14
Deviation, 325-7, 330-4, 340-6
documentation, 330-4
Diamond interchange, 940-3
Diamond symbols, 1055-10
Direct access ramp, HOV, 1050-2, 1050-3, 1050-5, 1050-9
HOV direct access
Directional interchange, 940-3
HOV direct access, 1055-5
Disabled access, transit, 1055-8, 1060-12
Distribution facilities, 620-3
Ditch inslopes, 430-3
Ditch slope, 640-4
Ditches in embankment areas
drainage, 640-6
DMS, definition, 860-4
Documentation *See* the last heading of most chapters
Drainage, 940-4, 1210-1
Drainage ditches in embankment areas, 640-6
Drilled shafts, 1130-2
Drop lanes, 910-8
Drums, 810-11
Dynamic message signs (DMS), 860-4

E

Easements,
perpetual, 1410-2
right of way, 1410-2
temporary, 1410-3
Elevators, 1025-9, 1055-8
Element, design, 325-5
Emergency escape ramps, 1010-3
Emergency vehicle preemption, 850-11
Encroachment, railroad, 930-3
Endangered species, 210-7
Enforcement areas, 1055-5
Enhanced enforcement, 810-8
Environmental documents
APD report, 1425-9
geotechnical report, 510-5
Environmental hearing, 210-11
Environmental Review Summary (ERS), 330-7
Erosion prevention, 1350-2
ERS. *See Environmental Review Summary*
Escape ramps, 1010-3
Evaluate Upgrade (EU), 325-7, 330-4
documentation, 330-4
Exit pattern
uniformity, 940-4

F

Farm road approach, 920-3
Farmlands, 210-7
Federal aid
R/W documents, 1410-6
Federal lands
R/W transactions, 1410-4
Fencing, 1460-1
chain link, 1460-2
design criteria, 1460-1
documentation, 1460-3
fencing types, 1460-2
gates, 1460-3
limited access highways, 1460-1
managed access highways, 1460-2
procedure, 1460-3
special sites, 1460-2
wire fencing, 1460-3
Ferry System Plan, 120-11
Filing requirements, monuments, 1450-3
Fill slopes, 430-3, 640-4, 700-4
Findings
engineering and operational acceptability, 1425-4
Findings and order, 210-14
plan, 220-5, 1430-2
Fire hydrants, 700-6
Fixed objects, 700-4
Flood plains, 210-7, 1210-1
Flyer stop, 1050-2, 1050-3, 1050-5, 1055-3, 1055-8
Freeway lighting applications, 840-9
Freight Rail Plan, 120-9
Frontage roads, 620-3, 1430-10
Full design level, 440-1
city streets and county roads, 440-4
curbs, 440-8
design speed, 440-1, 440-4

functional classification, 440-3
geometric design data, 440-4
grades, 440-10
medians, 440-7
parking, 440-9
pavement type, 440-9
right of way width, 440-9
shoulders, 440-5
state highway system, 440-4
state highways as city streets, 440-4
structure width, 440-9
terrain classification, 440-3
traffic lanes, 440-5
Functional classification, 120-7, 440-3
Funding. *See Programming*

G

G-R-E-A-T impact attenuator, 720-6, 720-14
Gabion walls, 1130-10
Gap acceptance length, HOV direct access, 1055-7
Gates, 1460-3
Geographic Information System (GIS), 1440-3
Geometric cross section, 640-1
outer separations, 640-3
roadsides, 640-4
roadways, 640-2
shoulders, 640-2
superelevation, 642-1
traveled way cross slope, 640-2
turning roadway widths, 640-2
Geometric design data, 440-4
Geometrics
HOV direct access, 1055-5
Grades, 440-10
maximum, 440-10
Geometric plan elements, 620-1
arrangement of lanes, 620-4
distribution facilities, 620-3
frontage roads, 620-3
horizontal alignment, 620-1
horizontal curve radii, 620-2
lane transitions, 620-4
median width transitions, 620-5
number of lanes and arrangement, 620-4
pavement transitions, 620-4
Geometric profile elements, 630-1
airport clearance, 630-4
alignment on structures, 630-2
coordination of vertical and horizontal alignments, 630-2
design controls, 630-1
grade length, 630-2
length of grade, 630-2
maximum grades, 630-2
minimum grades, 630-2
minimum length of vertical curves, 630-2
railroad crossings, 630-4
vertical alignment, 630-1
Geometrics
horizontal alignment, 620-1
HOV direct access, 1055-5
vertical alignment, 630-1
Geosynthetic soil reinforcement, 1130-9
Geosynthetics, 530-1
applications, 530-2, 530-16
definition, 530-2
design approach, 530-3
design process, 530-12
design responsibility, 530-11
ditch lining, 530-6
documentation, 530-11
erosion control, 530-5
function, 530-2
separation, 530-4
site-specific designs, 530-9
soil stabilization, 530-5
standard specification, 530-9
temporary silt, 530-20
temporary silt fence, 530-6
types, 530-14
types and characteristics, 530-1
underground drainage, 530-3
Geotechnical investigation, design, and reporting, 510-2
bridge foundations, 510-11
buildings, 510-7
cantilever signs, 510-6
communication towers, 510-7
consultants, 510-14
documentation, 510-14
earthwork, 510-4
ferries projects, 510-13
hydraulic structures, 510-5
key contacts, 510-2
luminaire, 510-6
noise walls, 510-8
park and ride lots, 510-7
permits, 510-3
reinforced slopes, 510-8
rest areas, 510-7
retaining walls, 510-8

rockslope, 510-10
sign bridges, 510-6
signals, 510-6
site data, 510-3
surfacing report, 510-14
unstable slopes, 510-9
Geotextiles
descriptions, 530-1
standard specification, 530-9
types, 530-15
Glare screens, 700-8, 700-9, 700-17
Global Positioning System (GPS), 1440-2
Gore, 940-1, 940-8
HOV drop ramp, 1055-21
Grade crossing, railroad, 930-1
Grade intersections, 910-1
Grades, 430-2, 440-10, 915-12, 1055-6
bikeway, 1020-6
maximum, 440-10, 630-2
minimum, 630-2
ramp, 940-5
roundabouts, 915-12
shared use path, 1020-14
vertical alignment, 630-2
Grading, contour, 1310-1
Gravity walls, 1130-1
Growth Management Act, 120-2, 120-5, 120-11, 120-12
Guardrail
placement cases, 710-12, 710-18
steel backed timber guardrail, 710-18
terminals and anchors, 710-9
thrie beam, 710-7, 710-13
W-beam, 710-7, 710-13
Guide posts, 830-4
placement, 830-7
Guide sign plan, 820-4
Guidelines for wall/slope selection, 1130-5
cost considerations, 1130-8
cut and fill considerations, 1130-5
facing options, 1130-7
feasible wall and slope heights and applications, 1130-7
settlement and deep foundation support considerations, 1130-6
summary, 1130-8
supporting structures or utilities, 1130-7

H

HAR, definition, 860-4
Hazard, 700-4
definition, 700-1
fixed objects, 700-4
median considerations, 700-6
side slopes, 700-4
water, 700-6
Headlight glare, 700-8
Hearings, 210-6
access, 210-12, 1430-2, 1430-12
administrative appeal, 210-15
advertising, 210-7
combined, 210-15
corridor, 210-11
design, 210-12
environmental, 210-11
examiner, 210-13
findings and order, 210-14
formal, 210-4
informal, 210-4
notice, 210-7
open format, 210-4
preparation, 210-8
requirements, 210-6
sequence, 210-16
study plan, 210-3, 210-11
Heritage tour route
barrier, 710-4
Hex-Foam Sandwich impact attenuator, 720-6, 720-15
High accident corridor (HAC), 1025-2
High accident locations (HAL), 1025-2
High occupancy vehicle (HOV) facilities, 915-1, DM Supplements 5/3/2000 & 9/28/1999,
See also HOV direct access
arterial street, 1050-5, 1050-9
buffer-separated, 1050-3, 1050-9
design criteria, 1050-7
direct access, 1055-1
direct access ramp, 1050-2, 1050-3, 1050-5, 1050-9
enforcement, 1050-7
enforcement areas, 1050-9, 1050-10, 1050-13 through 1050-15
facility type, 1050-3
freeway, 1050-3
ITS, 1050-7

lane termination, 1050-9
nonseparated, 1050-3, 1050-9
preliminary design and planning, 1050-2
ramp meter bypass design criteria, 1050-9, 1050-13, 1050-14
separated roadway, 1050-3, 1050-8, 1050-11
signs and pavement markings, 1050-10
vehicle occupancy designation, 1050-6
Highway
as city streets, 440-4
state system, 440-4
Highway advisory radio (HAR), 860-4
Highway construction program, 150-4
Highway-highway separation, 1110-3
Highway-railroad separation, 1110-3
Highways and Local Programs Division, 120-10
Highways of Statewide Significance, 120-6
Horizontal alignment, 620-1
Horizontal clearance, bridge, 1120-2
Horizontal curve radii, 620-2
HOV direct access, 1055-1
acceleration lanes, 1055-6
deceleration lanes, 1055-7
design speeds, 1055-5
design vehicles, 1055-5
direct access geometrics, 1055-5
flyer stops, 1055-8
gap acceptance length, 1055-7
grades, 1055-6
intelligent transportation systems, 1055-10
lighting, 1055-10
locations, 1055-3
Off-connections, 1055-7
on-connections, 1055-6
passenger access, 1055-8
ramp spacing, 1055-3
ramp widths, 1055-6
sight distance, 1055-5
signing, 1055-9
traffic barriers, 1055-9
traffic design elements, 1055-9
transit stops, 1055-4
types, 1055-3
vertical clearance, 1055-7
HOV facilities. *See High occupancy vehicle facilities*
Hydraulic considerations, 1210-1
channel changes, 1210-2
flood plain, 1210-1
roadway drainage, 1210-2
runoff, 1210-3
stream crossings, 1210-2
subsurface discharge, 1210-3
subsurface drainage, 1210-3
Hydraulic design, 1210-1
design responsibility, 1210-3
geotechnical investigation, 510-5
hydraulic considerations, 1210-1
safety considerations, 1210-3

I

Illumination, 915-14
bridges, 840-5
construction zones and detours, 840-4
roundabouts, 915-14
Impact attenuator systems, 720-1
design criteria, 720-6
object markers, 830-5
older systems, 720-5
permanent installations, 720-1
selection, 720-6
work zone installation, 720-4
Inertial barrier, 720-3, 720-5, 720-13
Inscribed diameter, 915-9
Intelligent transportation systems (ITS), 860-1, 1055-10
closed circuit television cameras, 860-1
dynamic message signs, 860-4
highway advisory radio, 860-4
HOV bypass, 860-4
HOV facilities, 1050-7
motorist information, 860-4
National ITS Architecture, 860-1
public information components, 860-4
surveillance, control, and driver information, 860-1
traffic data collection, 860-2
traffic flow control, 860-3
traffic operations center (TOC), 860-2
Traffic Systems Management Center (TSMC), 860-2
Venture Washington, 860-1
Interchanges. *See Traffic interchanges*
access control, 1430-3
HOV direct access, 1055-1
HOV off-connections, 1055-7
HOV on-connections, 1055-6

International boundaries, R/W, 1410-2
Intersections at grade, 430-3, 910-1
angle, 430-3, 910-3
approval, 910-13
channelization, 910-6
configurations, 910-3
crossroads, 910-4
design considerations, 910-3
design vehicle, 430-3, 910-4
interchange ramp terminals, 910-13
island, 910-9
left-turn lanes, 910-6
median crossover, 910-2
plans, 910-13
right-turn corners, 910-5
roundabouts, 910-10
sight distance, 910-11
spacing, 910-4
superelevation, 642-3
traffic control, 910-12
transit, 1060-11
U-turns, 910-10
Interstate, 325-1, 440-11
Irrigation, 1330-1
Islands, 910-9
roundabouts, 915-12
ITS, 1055-10
ITS, definition, 860-1

J

Jurisdiction Over State Highways, DM Supplement 1/22/2003, 1050-14

L

Land corner record (form), 1450-7
Landscaping, 1330-1, 1350-1
Lane, 440-5, 940-6
acceleration, 1055-6
balance, 940-6
bike, 1020-1, 1020-4
deceleration, 1055-7
drop, 910-8
left-turn, 910-6
number and arrangement, 620-4
reduction, 940-6
right-turn, 910-8
speed change, 910-8
transitions, 620-4
width, 430-1, 440-5, 1055-6
width, turning roadway, 641-1
Lane lines. *See Pavement markings*
Left-turn lanes, 910-6
one-way, 910-6
storage, 910-6
two-way, 910-7
Length of need, traffic barrier, 710-6
definition, 710-1
Licensed professionals, certification by, 330-4, 1450-2, 1450-3
Light standards, 700-6, 840-7
geotechnical investigation, 510-6
Lighting, 1055-10
Limited access 1430-1
approach, 1420-2
definitions, 1420-2, 1420-4
full control, 1430-3
level of control, 1430-1
limits, 1430-15, 1430-16, 1430-17, 1430-18, 1430-19, 1430-20, 1430-21, 1430-22
modifications to, 1430-12
modified control, 1430-8
partial control, 1430-5
references, 1420-1
vocabulary, 1420-5
Limits
turnback, 1430-11
LMA impact attenuator, 720-6, 720-15
Load rating, bridges, 1120-1
Local agency
bridge design, 1120-2
initiated intersections, 910-14
Longitudinal barrier. *See Traffic barrier*
Longitudinal easements, railroad, 930-3
Loop ramp connections, 940-9
Low clearance warning signs, 1120-3
Luminaire. *See Light standards*

M

Mailbox location and turnout design, 700-16
Mailboxes, 700-5
limited access, 1430-5, 1430-7, 1430-10
Maintenance site. *See Sundry sites*
Managed access
access connection, 1435-1
Class, 1435-1
connections, 1420-2, 1420-3
corner clearance, 1435-6
definitions, 1420-2
permit, 1435-8
references, 1420-1
vocabulary, 1420-5

Manual on Uniform Traffic Control Devices (MUTCD), 820-1, 830-1, 850-1, 860-2, 1025-1, 1120-3
Maps. *See also Plans*
monumentation, 1450-3
Marked crosswalks, 1025-6
Masonry concrete blocks, 1130-7
Mast arm signal standards, 850-14
Master Plan for Limited Access Highways, 120-7, 330-7, 1420-4
Materials sources, 510-1, 510-15
Matrix. *See Design matrix*
Mechanically Stabilized Earth (MSE), 1130-1, 1130-22
Median, 440-7
design, 640-3
safety considerations, 700-6
transitions, 620-5
width, 440-8
Median barrier, 700-6
Median crossovers, 960-1
analysis, 960-1
approval, 960-2
design, 960-1
supplement August 1, 2001
Memorandum of Understanding
WSP, 1040-2
Metal bin walls, 1130-11
Metropolitan Planning, 120-2, 120-3, 120-4, 120-8, 120-10, 120-11
Metropolitan Planning Organizations (MPO), 120-3
Metropolitan Transportation Improvement Program (MTIP), 120-4, 120-12
Midblock pedestrian crossing, 1025-1
Mileposts
markers, 820-4
sign, 820-4
Military Traffic Management Command Transportation Engineering Agency (MTMCTEA), 1120-3
Minor arterial, 440-14
Minor operational enhancement projects, 340-1
matrix procedures, 340-4
project approval, 340-5
project types, 340-2
selecting a matrix, 340-4
using a matrix, 340-4
Minor safety and minor preservation work, 410-1
Modified design level, 430-1
bridges, 430-3
cross slope, 430-2
design speed, 430-1
fill slopes and ditch inslopes, 430-3
intersections, 430-3
profile grades, 430-2
ramp lane widths, 430-1
roadway widths, 430-1
stopping sight distance, 430-2
Monotube cantilever sign supports, 820-3
Monotube sign bridges, 820-3
Monument Database, WSDOT, 1440-2
Monumentation, 1450-1
alignment monuments, 1450-2
control monuments, 1450-2
DNR permit, 1450-3
filing requirements, 1450-3
land corner record, 1450-3
monumentation map, 1450-3
other monuments, 1450-3
property corners, 1450-3
Mopeds, 1020-1
Motorist information, 860-4
additional public information components, 860-4
dynamic message signs, 860-4
highway advisory radio, 860-4
Mountable curbs, 440-9
Moveable barriers, 810-10
MTMCTEA, 1120-3
MUTCD, 820-1, 830-1, 850-1, 860-2, 1025-1

N

N-E-A-T impact attenuator, 720-4, 720-13
National Highway System (NHS), 325-1
Interstate System, 325-1
Strategic Highway Corridor Network (STRAHNET), 325-1
National ITS Architecture, 860-1
New Jersey shape barrier, 710-15
Noise barriers, 1140-1
design, 1140-1
documentation, 1140-4
earth berm, 1140-2
geotechnical investigation, 510-8
noise wall, 1140-2
procedures, 1140-4
wall types, 1140-3

Non-NHS highways, 325-2
Non-recoverable slope, 700-2
Non-separated HOV lanes, 1050-2, 1050-3, 1050-5, 1050-7, 1050-9, 1050-11
Notional live load, 1120-1

O

Object markers, 830-5
Off connections, 940-8
On connections, 940-7
One-way left-turn lanes, 910-6
Open house meetings, 210-4
Operational, environmental and visual functions, 1320-1
Outer separations, 640-3
Overhead sign installations, 820-3

P

PAL, 1025-2
Park and ride lots, 1060-1
    access, 1060-3
    bicycle facilities, 1060-5
    design, 1060-2
    drainage, 1060-5
    fencing, 1060-6
    geotechnical investigation, 510-7
    HOV direct access, 1055-3, 1055-5
    illumination, 1060-5
    internal circulation, 1060-3
    landscape, 1060-6
    maintenance, 1060-6
    motorcycle facilities, 1060-5
    pavement design, 1060-5
    pedestrian movement, 1060-4
    shelters, 1060-5
    site selection, 1060-2
    stall size, 1060-4
    traffic control, 1060-5
Parking, 440-9
    roundabouts, 915-14
Partial cloverleaf, 940-3
Passenger access, transit, 1055-8
Passing lanes, 1010-2
Passing sight distance, 650-1
    horizontal curves, 650-2
    no passing zone markings, 650-2
    vertical curves, 650-2
Path, bicycle. *See Shared use path*
Pavement
    transitions, 620-4
Pavement markings
    longitudinal, 830-1
    materials, 830-6
    roundabouts, 915-13
    transverse, 830-2
Pavement structure, 520-1
    estimating tables, 520-1
PCMS, 810-10
PD. *See Project definition*
Pedestrian accident locations (PAL), 1025-2
Pedestrian bridge, 1120-3
Pedestrian connectivity, 1025-3
Pedestrian crossings at-grade, 1025-6
    limited access, 1430-5, 1430-7, 1430-10
Pedestrian design considerations, 1025-1
    activity generators, 1025-4
    bridges, 1120-4
    bulb out, 1025-1
    cross slope, 1025-6
    crosswalk, 1025-1
    diagonal ramps, 1025-7
    facilities, 1025-1, 1025-4
    funding programs, 1025-2
    grade, 1025-6
    grade separations, 1025-8
    human factors, 1025-3
    illumination and signing, 1025-9
    landing, 1025-1
    midblock pedestrian crossing, 1025-1
    policy, 1025-2
    raised median, 1025-2
    refuge island, 1025-2
    roundabouts, 915-13
    shared use paths, 1025-5
    shoulders, 1025-5
    sidewalk ramps, 1025-7
    sidewalks, 1025-5
    transit stops, 1025-9
    walking and hiking trails, 1025-5
    walking rates, 1025-3
Pedestrian risk projects, 1025-2
Pedestrian-friendly, 1025-1
Permits
    construction, 1410-3
    geotechnical permits, 510-3
    managed access, 1435-8
    remove/destroy monument, 1450-5
    right of way, 1410-2
    traffic signal, 850-2
Permits and approvals, 240-1

Photogrammetry, 1440-3
Physical barriers, 810-9
Pit sites, R/W, 1410-2
Planning,
planning and programming, 120-14
Plans
access hearing, 210-13, 1410-6, 1430-2, 1430-3
access, findings and order, 1430-2
access, intersection, 1430-13, 1430-14
access report, 1430-2, 1430-3
environmental study, 210-3, 220-2
findings and order, 220-5
guide sign, 820-4
interchange, 940-10
intersection, 910-13
limited access, 1410-2
limited access, modifications to, 1430-12
PS&E, R/W, 1410-4
public involvement, 210-3
right of way, 1410-1, 1410-3, 1410-4
right of way and limited access, 1430-1, 1430-2, 1430-5, 1430-8, 1430-10, 1430-12, 1430-13
Portable changeable message signs, 810-10
Portable traffic signals, 810-12
Preliminary signal plan, 850-14
Principal arterial, 440-12
Private land
R/W transactions, 1410-4
Profile grades, 440-10
Program elements, 150-6
Programming
R/W appraisal and acquisition, 1410-6
R/W funding, 1410-4
Project analysis, 325-7
Project approval, 340-5
Project definition phase
Environmental Review Summary (ERS), 330-7
Project environmental matrix, 240-9
Project summary, 150-9
Project Type, 325-2, 340-2
Project types and permits, 240-7
bridge deck rehabilitation, 240-8
bridge replacement, 240-7
bridge scour countermeasures, 240-8
bridge seismic retrofit, 240-8
existing bridge widening, 240-8
new special structures, 240-8
other bridge structures, 240-8
special bridge repair, 240-8
steel bridge painting, 240-8
Property corners, 1450-3
Proprietary items, 720-7
impact attenuator, 720-7
irrigation, 1330-1
noise walls, 1140-4
retaining wall design process, 1130-28, 1130-29
retaining walls, design, 1130-9
retaining walls options, 1130-18
traffic barrier terminals, 710-9, 710-10
traffic barriers, special, 710-18
Protective screening for highway structures, 1025-8, 1120-5
Public information, 810-1
Public Transportation and Intercity Rail Passenger Plan for Washington State, 120-9
Public Transportation and Rail Division, 120-8

Q

Q Program, 340-2
QuadGuard cz impact attenuator, 720-4
QuadGuard Elite impact attenuator, 720-2, 720-3
QuadGuard impact attenuator, 720-2, 720-9
QuadTrend-350 impact attenuator, 720-1, 720-8
Quarry site. *See Sundry sites*

R

Railroad
crossings, 630-4, 930-1
easements, 930-3
encroachments, 930-3
grade crossing orders, 930-3
grade crossings, 930-1
limited access, 1430-11
longitudinal easements, 930-3
preemption, 850-11
R/W transactions, 1410-4
stopping lanes, 930-2
traffic control systems, 930-1
Ramp, 940-4
cross section, 940-5
design speed, 940-4
grade, 940-5
HOV direct access 1055-1, 1055-5
HOV drop, 1055-4, 1055-11
HOV flyover, 1055-4, 1055-13
HOV T ramp, 1055-4, 1055-12

lane increases, 940-5
lane widths, 430-1, 940-5, 1055-6
location, HOV direct access, 1055-3
meters, 940-6
shoulder widths, 1055-6
sight distance, 940-5
spacing, HOV direct access, 1055-3
superelevation, 642-1
superelevation runoff, 642-4
terminal intersections at crossroads, 940-9
terminal locations, HOV direct access, 1055-3
terminals, 910-13
REACT 350 impact attenuator, 720-3, 720-4, 720-11
Recoverable slope, 700-2,
Recovery area, 700-2, 700-13
Regional Transportation Improvement Program (RTIP), 120-12
Regional Transportation Planning Organizations (RTPO), 120-3, 120-6
Regulatory traffic control strategies, 810-8
Reinforced slopes, 1130-1
geotechnical investigation, 510-8
Required safety items of work, 410-1
Residential road approach, 920-2
Rest areas, 1030-1
geotechnical investigation, 510-7
Retaining walls, 1130-1
aesthetics, 1130-4
anchored walls, 1130-2, 1130-24
classifications, 1130-1
constructibility, 1130-4
coordination with other design elements, 1130-4
cut and fill considerations, 1130-5
data submission for design, 1130-13
design principles, 1130-2
design requirements, 1130-2
drainage design, 1130-3
gabion walls, 1130-10, 1130-23
geotechnical investigation, 510-8
geotechnical and structural design, 1130-3
investigation of soils, 1130-3
metal bin walls, 1130-11, 1130-23
MSE gravity walls, 1130-2, 1130-22
nongravity cantilevered walls, 1130-2, 1130-24
nonpreapproved proprietary walls, 1130-12
nonstandard nonproprietary walls, 1130-12
nonstandard walls, 1130-9, 1130-13
preapproved proprietary walls, 1130-11
prefabricated modular gravity walls, 1130-2, 1130-23
proprietary wall systems, 1130-9
rigid gravity walls, 1130-1, 1130-24
rockeries, 1130-2, 1130-25
semigravity walls, 1130-2, 1130-24
settlement and deep foundation support considerations, 1130-6
standard walls, 1130-9, 1130-10
traffic barrier shape, 1130-3
wall and slope heights, 1130-7
Right of way, 1410-1
appraisal and acquisition, 1410-4
easements and permits, 1410-2
plans, 1410-1
programming for funds, 1410-4
special features, 1410-2
transactions, 1410-4
width, 440-9
Right-turn
corners, 910-5
lanes, 910-8
pocket and taper, 910-8
Road approaches, 920-1, 1420-5
commercial, 920-3
design considerations, 920-2
design template, 920-2
drainage requirements, 920-4
farm, 920-3
location, 920-3
residential, 920-2
right of way, 1410-2
sight distance, 920-3
utility and special use, 920-3
Road closures, 810-5
Roadside, 1300-1
Roadside development, 1300-1
Roadside safety, 700-1
clear zone, 700-2
definitions, 700-1
Documentation, 700-9
fixed objects, 700-4
guidelines for embankment barrier, 700-15
hazards, 700-4
headlight glare, 700-8
median considerations, 700-6
rumble strips, 700-7
side slopes, 700-4
water, 700-6

Roadsides,
bridge end slopes, 640-6
drainage ditches in embankment areas, 640-6
rock cuts, 640-4
side slopes, 640-4
stepped slopes, 640-6
Roadway rumble strips, 700-7
Roadway sections, 640-6
Roadways, 640-2
shoulders, 640-2
traveled way cross slope, 640-2
turning roadway widths, 640-2, 641-1
widths, HOV facilities, 1050-8, 1050-11, 1050-12
Rock anchors, 1130-2
Rock cuts, 640-4
geotechnical investigation, 510-10
Rock, investigation, 510-1
Rock walls, 1130-2
Roundabouts, 910-10, 915-1
access, 915-14
access control, modified, 1430-9
access control, partial, 1430-6
bicycles, 915-13
capacity analysis, 915-7
categories, 915-5
circulating roadway, 915-10
deflection, 915-9
design clear zone, 915-13
design speed, 915-9
elements, 915-3
entry, 915-10
exit, 915-10
geometric design, 915-8
grades, 915-12
illumination, 915-14
inscribed diameter, 915-9
islands, 915-12
locations not normally recommended, 915-1
locations not recommended, 915-2
parking, 915-14
pavement marking, 915-13
pedestrians, 915-13
recommended locations, 915-1
sight distance, 915-11
signing, 915-13
superelevation, 915-12
transit facilities, 915-14
Route, bicycle, 1020-1, 1020-17
Route continuity, 940-4
Route Development Plans, 330-7
Rumble strips, 700-7
Runoff, 1210-3

S

Safety, basic, 410-1
Safety rest areas, 1030-1
Safety, roadside. *See Roadside safety*
SC&DI, 860-1
SCRDI, 1055-10
Scale sites, 1040-1
Scenic byway,
barrier, 710-4
School walk route, 1025-7
Scoping phase
Design Decisions Summary (DDS), 330-7
Project Definition (PD), 330-8
project summary, 330-7
Screening, 810-12
Section 4(f),
lands, 210-7
Semidirectional interchange, 940-3
Sentre impact attenuator, 720-5, 720-14
Shared roadway, 1020-4, 1020-17
Shared use paths, 1020-2, 1025-5
Sheet piles, 1130-2
Shotcrete facing, 1130-7
Shoulders
channelization, 910-9
cross slope, 640-2
driving for slow vehicles, 1010-3
functions, 440-6
rumble strips, 700-7
turn-lanes, 910-9
turnouts, 1010-3
width, 430-1, 440-5, 1055-6
width for curb, 440-6
Shy distance, 710-4
definition, 710-1
Side slopes, 640-4, 700-4
Sidewalk ramps, 1025-7
Sidewalks, 1020-4, 1025-5
Sight distance, 650-1, 920-3, 940-5, 940-7, 1055-5
bicycle, 1020-14
decision, 650-4
intersections, 910-11
passing, 650-1
road approaches, 920-3
roundabouts, 915-11
stopping, 650-2, DM Supplement 10/9/2002

Sight triangle, 910-11
Sign posts, 700-5
Signal
geotechnical investigation, 510-6
intersection warning sign, 850-13
phasing, 850-4
supports, 700-6, 850-13
warrants, 850-4
Signed shared roadway. *See Bicycle facilities*
Signing, 820-1, 1055-9
bikeways, 1020-15, 1020-17
bridges, 820-3, 1120-3
cantilever sign structures, 820-3
design components, 820-2
foundations, 820-3
geotechnical investigation, 510-6
ground mounted signs, 820-3
guide sign plan, 820-4
heights, 820-2
horizontal placement, 820-4
illumination, 820-3
lateral clearance, 820-2
lighting fixtures, 820-3
location, 820-2
longitudinal placement, 820-2
mileposts, 820-4
overhead installation, 820-3
posts, 700-5, 820-3
roundabouts, 915-13
service walkways, 820-4
bridges clearance, 1120-3
structure mounted sign mountings, 820-3
vertical clearance, 820-4
Signing bridge clearance, 1120-3
Silt fence, 530-6
Single point (urban) interchange, 940-3
Single slope barrier, 710-15
Site data for structures, 1110-1
additional data for grade separations, 1110-3
additional data for waterway crossings, 1110-2
additional data for widenings, 1110-4
CAD files and supplemental drawings, 1110-1
highway-highway separation, 1110-3
highway-railroad separation, 1110-3
required data for all structures, 1110-1
Slope
bridge end, 640-6
geotechnical investigation, 510-8
protection, 1120-5
protection at watercrossings, 1120-5
roadside, 640-4
roadways, 640-2
rock cuts, 640-4
shoulders, 640-2
side, 640-4
side slopes, 640-6
stabilization, 1350-2
traveled way, 640-2
Slow moving vehicle
turnouts, 1010-3
Soil bioengineering, 1350-1
design responsibilities and considerations, 1350-3
streambank stabilization, 1350-2
upland slope stabilization, 1350-2
Soil nail walls, 1130-8
Soils, 510-1
investigation, 510-1
soldier piles, 1130-2
Spacing
interchanges, 940-4
intersections, 910-4
Span wire, 850-14
Speed change lanes, 910-8, 940-7, 940-8, 1055-6, 1055-7
Speed, design, 440-4, 940-4, 1055-5
Splitter island, 915-12
Stairways, 1025-9
State Commute Trip Reduction Program, 120-8
State Highway System Plan, 120-4, 330-7
rural bicycle touring routes, 1020-2
urban bicycle projects, 1020-2
State highways as city streets, 440-4
Statewide Planning, 120-3
Statewide Transportation Improvement Program (STIP), 120-5, 120-13
Statewide Transportation Planning, 120-1, 120-4
Steel backed timber guardrail, 710-18
Stepped slopes, 640-6
Stockpiles, R/W, 1410-2
Stone guardwalls, 710-18
Stopping sight distance, 430-2, 650-2, 1055-5
crest vertical curves, 650-3
effects of grade, 650-3
existing, 650-3

horizontal curves, 430-2, 650-4
sag vertical curves, 650-4
vertical curves, 430-2
Storage length, left-turn lane, 910-6
Strain poles
steel, 850-14
timber, 850-14
Streambank stabilization, 1350-2
Striping. *See Pavement markings*
Structural capacity, 1120-1
Structure width, 440-9
Structures. *See Bridges*
Study plan
environmental, 220-2
value engineering, 315-2
Sundry sites
right of way, 1410-2
source of materials, 510-1
Superelevation, 642-1
existing curves, 642-2
intersections, 642-3
rates for low-speed urban managed access highway, 642-2
rates for open highways and ramps, 642-1
roundabouts, 915-12
runoff for highway curves, 642-3
runoff for ramp curves, 642-4
shared use path, 1020-13
Surface Transportation Program, 120-7
Surfacing materials, 510-1
pavement structure, 520-1
Surveying and mapping, 1440-1
after construction is completed, 1440-2
datums, 1440-2
during design and development of the PS&E, 1440-1
during the project definition phase, 1440-1
geographic information system (GIS), 1440-3
global positioning system (GPS), 1440-2
photogrammetric surveys, 1440-3
procedures, 1440-1
WSDOT monument database, 1440-2
Systems Analysis & Program Development Branch, 120-13

T

Taper, *See also Lane transitions*
right-turn, 910-8
TAU-II impact attenuator, 720-2, 720-10
TDM Strategic Plan, 120-10
Temporary concrete barriers, 810-10
Temporary pavement markings, 810-12
Terrain classification, 440-3
Textured crosswalks, 1025-6
Thrie beam. *See Guardrail*
TMA, 810-10
TRACC impact attenuator, 720-5, 720-13
Traffic
data collection, 860-2
islands, 910-9
lanes, 440-5
operations center (TOC), 860-2
signal design, 850-4
signal permit, 850-2
Traffic analysis
intersections, 910-3
Traffic barrier, 700-2, 1055-9
Traffic control, 810-1
channelization, 910-6
intersections, 910-12
Traffic control plans, 810-9
Traffic control signals, 850-1
control equipment, 850-8
crosswalks and pedestrians, 850-8
detection systems, 850-10
electrical design, 850-15
foundation design, 850-14
funding, construction, maintenance, & operation, 850-3
intersection design considerations, 850-7
preemption systems, 850-11
preliminary signal plan, 850-14
signal displays, 850-12
signal phasing, 850-4
signal supports, 850-13
signal warrants, 850-4
strain poles, 850-14
third party agreement signals, 850-3
Traffic flow control, 860-3
HOV bypass, 860-4
ramp meters, 860-3

Traffic interchanges, 940-1
collector distributor roads, 940-9
connections, 940-6 through 940-9
design, 940-2
HOV direct access, 1055-1
lane balance, 940-6
on two-lane highways, 940-10
patterns, 940-3
plans, 940-10
ramp design speed, 940-4
ramp grade, 940-5
ramp terminal intersections, 940-9
ramp terminals, 910-13
ramp widths, 940-5
ramps, 940-4
sight distance, 940-1 through 5
spacing, 940-4
weaving sections, 940-9
Traffic signal standards, 700-6
Traffic Systems Management Center (TSMC), 860-2
Transit
passenger access, 1055-8
Transit benefit facilities, 1060-1
bus stops and pullouts, 1060-7
disabled accessibility, 1060-12
flyer stops, 1050-5, 1055-4
flyer stop access points, 1055-5
grades, 1060-11
intersection, 1060-11
lane widths, 1060-11
park and ride lots, 1060-1
park and ride stops, 1055-5
passenger amenities, 1060-10
paving sections, 1060-10
priority preemption, 850-11
roundabouts, 915-14
stops, 1055-4
transfer/transit centers, 1060-6
vehicle characteristics, 1060-11
Transitions and connections, traffic barrier, 710-11
Transitions, pavement, 620-4
Transportation Demand Management Office, 120-9
Transportation equity act (TEA-21), 120-3
Transportation Facilities and Services of Statewide Significance, 120-6
Travel Demand Management Program (TDM), 120-11
Traveled way, 700-2
Traveled way cross slope, 640-2
Traveler services, 1030-1
Trees, 700-5
TREND impact attenuator, 720-5, 720-14
Truck
climbing lanes, 1010-2
escape ramps, 1010-3
weigh sites, 1040-1
Truck mounted attenuator, 720-5, 810-10
Tubular markers, 810-11
Turning path template, 910-15, 910-16, 910-17, 1060-23, 1060-24, 1060-35, 1060-36
Turning roadway widths, 640-2, 641-1
articulated buses, minimum, 1055-6
HOV facilities, 1050-8, 1050-12
Turning roadways, 641-1
Turnbacks, limited access, 1430-11
Turnouts, 1010-3
Two-way left-turn lanes, 910-7
Type, approach, 1430-7

U

U-turns, 910-10
U.S. Coast Guard, 1110-3
Uniformity of exit pattern, 940-4
Unmarked crosswalk, 1025-6
Urban managed access highways, 440-18
Urban managed access highways superlevation, 642-2

Urban Roadways, DM Supplement Revised 3/25/2004
Utilities
limited access, 1430-5, 1430-7, 1430-10
R/W transactions, 1410-4
Utility poles, 700-6
Utility road approach, 920-3

V

Value Engineering (VE), 315-1
implementation phase, 315-3
job plan, 315-5
procedure, 315-1
selection phase, 315-1
team tools, 315-7
Variance, design, 325-7
Vegetation, 1320-1
Vehicle turning path template, 910-15, 910-16, 910-17, 1060-23, 1060-24, 1060-35, 1060-36

Venture Washington, 860-1
Vertical alignment, 630-1
design controls, 630-1
length of grade, 630-2
maximum grades, 630-2
minimum grades, 630-2
minimum length of vertical curves, 630-2
structures, 630-2
Vertical clearance
HOV direct access, 1055-7
new bridge, railroad, 1120-2
new bridge, roadway, 1120-2
pedestrian bridge, 1120-3
signing, bridge, 1120-3
structures, 1120-3
Vertical curbs, 440-9
Visual Functions, 1320-1

W

W-beam guardrail. *See Guardrail*
Walking and hiking trails, 1025-5
Walls, 1130-1
geotechnical investigation, 510-8
noise, 1140-2
retaining, 1130-1
Warrants, 850-4, 1010-2
Washington State Patrol
median crossovers, 960-2
weigh sites, 1040-1
Waste Sites, R/W, 1410-2
Washingtons Transportation Plan (WTP), 120-4
Water, hazard, 700-6
Water-filled barriers, 810-9
Weaving sections, 940-9
Weigh sites, 1040-1
federal participation, 1040-4
permanent facilities, 1040-2
planning, development, and responsibilities, 1040-1
portable facilities, 1040-3
shoulder sites, 1040-4
Wetlands, 1210-2
Wheelchair, 1025-4
Wide QuadGuard impact attenuator, 720-9
Wide REACT 350 impact attenuator, 720-11
Width
HOV facilities, 1050-8, 1050-11, 1050-12
lane, 430-1, 440-5
median, 440-7
right of way, 440-9
shoulder, 430-1, 440-5
structure, 440-9
turning roadway, 641-1
Widths
HOV direct access, 1055-6
Wildlife warning reflectors, 830-5
Wire fencing, 1460-3
Work zone classification, 810-2
intermediate-term stationary work zones, 810-2
long-term stationary work zones, 810-2
mobile work zones, 810-2
short-duration work zones, 810-2
short-term stationary work zones, 810-2
Work zone safety, 810-6
flaggers, 810-6
road users, 810-7
workers, 810-6
Work zone traffic control, 810-1
Work zone types, 810-3
crossover, 810-3
detour, 810-3
intermittent closure, 810-3
lane closure, 810-3
lane constriction, 810-3
median use, 810-3
multiple lane separation, 810-3
shared right of way, 810-3
shoulder use, 810-3
temporary bypass, 810-3

Z

Zones, transition
shared use path, 1020-12