NOTES:

1. SEE STANDARD PLAN C-8 FOR DETAILS AND DIMENSIONS NOT SHOWN.
2. ALL PINS SHALL HAVE 18" MIN. PENETRATION INTO GROUND.
3. PLANE #1 (SEE SURFACE GEOMETRY DETAIL) BEGINS ALONG THE UPPER ANGLE OF THE TYPE 2 TRAFFIC BARRIER SHAPE (A,B), AND TRAVELS THROUGH THE STRUCTURE TO THE CENTER OF THE FOOTING (C,D).
4. FACET #2 (SEE SURFACE GEOMETRY DETAIL) BEGINS ALONG THE LOWER ANGLE OF THE TYPE 2 TRAFFIC BARRIER SHAPE (W,X), AND TWISTS TO HORIZONTAL AT THE FRONT OF THE STRUCTURE (Y,Z).

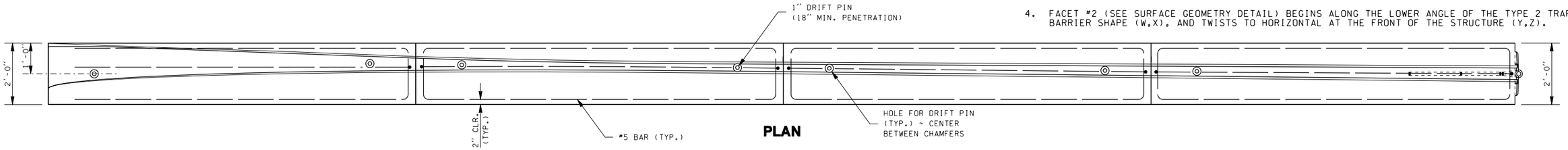

PLAN

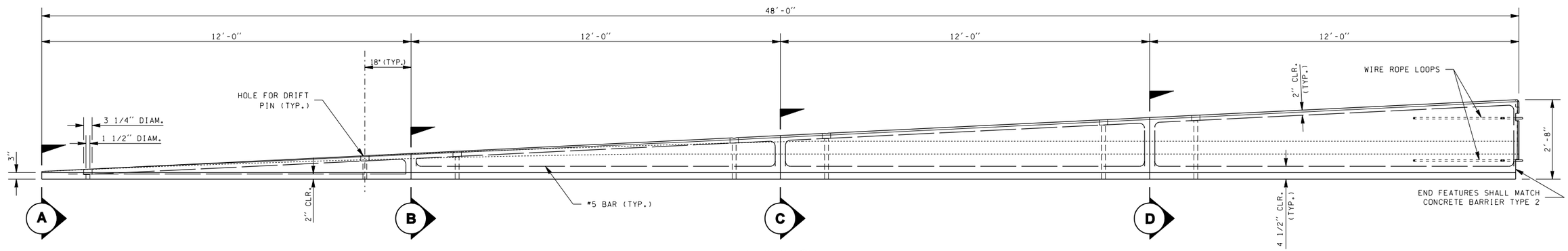

ELEVATION

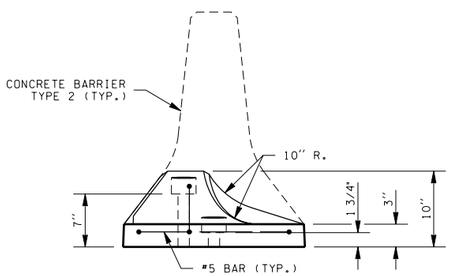

SECTION A

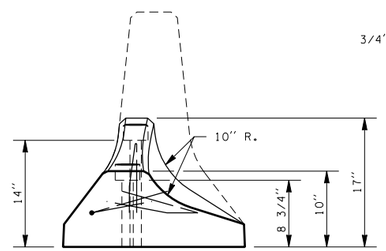

SECTION B

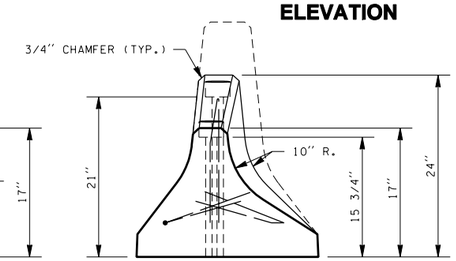

SECTION C

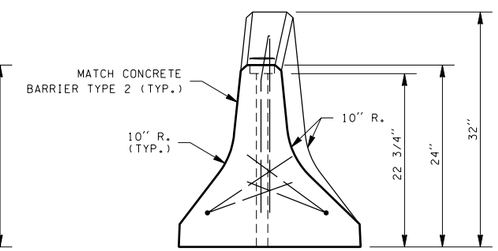

SECTION D

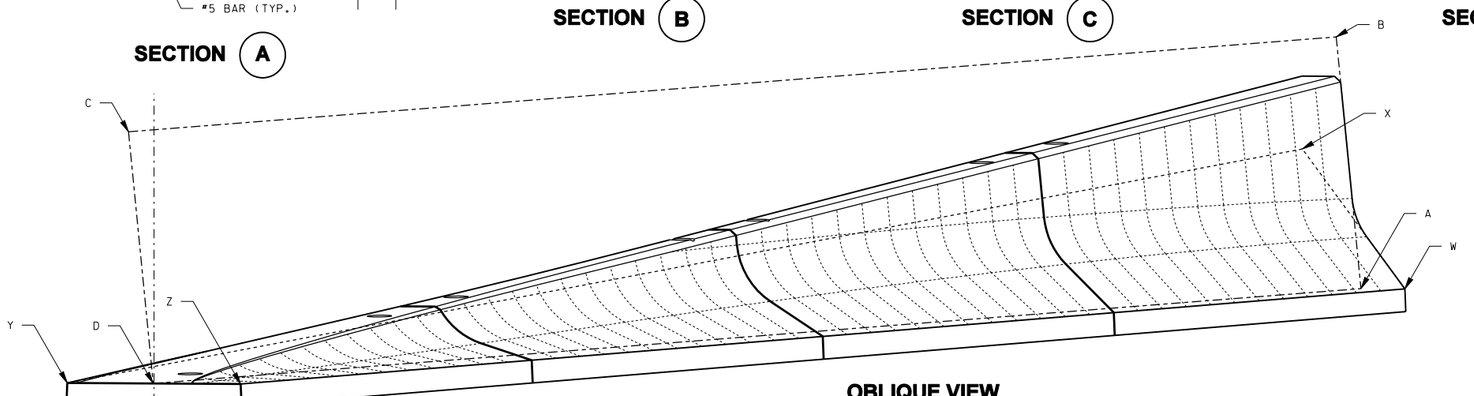

OBLIQUE VIEW

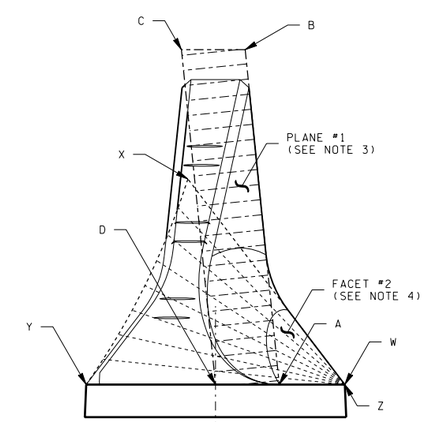

SURFACE GEOMETRY DETAIL

LOW SPEED CONCRETE BARRIER TERMINAL

FILE NAME	TB-4.DGN						PLOT1
TIME	01:11:09 PM			REGION NO.	STATE	FED.AID PROJ.NO.	
DATE	06/22/2005			10	WASH		
PLOTTED BY	sujkam			JOB NUMBER			SHEET
DESIGNED BY							OF
ENTERED BY				CONTRACT NO.		LOCATION NO.	SHEETS
CHECKED BY							
PROJ. ENGR.							
REGIONAL ADM.		REVISION	DATE	BY			

P.E. STAMP BOX DATE

P.E. STAMP BOX DATE

Washington State
Department of Transportation