GENERAL NOTE

See Standard Plan F-3 for Curb Expansion and Contraction Joint spacing.

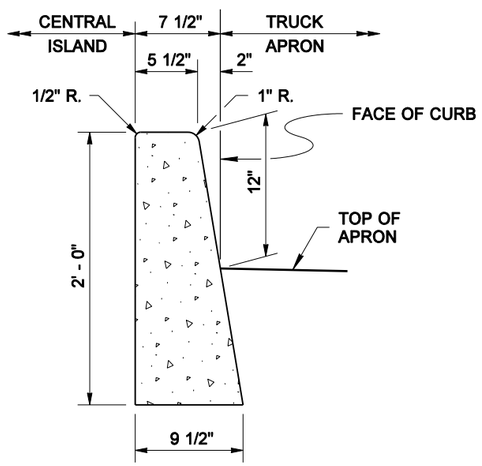

ROUNDABOUT CENTRAL ISLAND CEMENT CONCRETE CURB

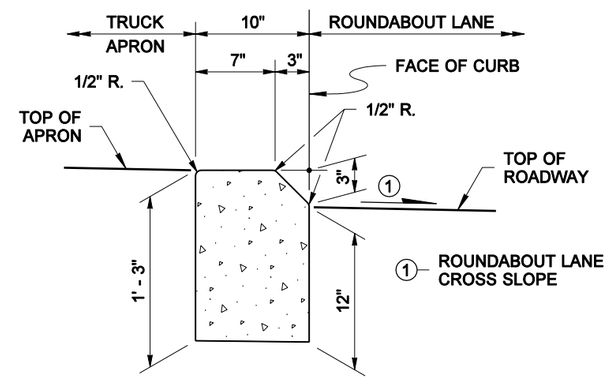

ROUNDABOUT TRUCK APRON CEMENT CONCRETE CURB

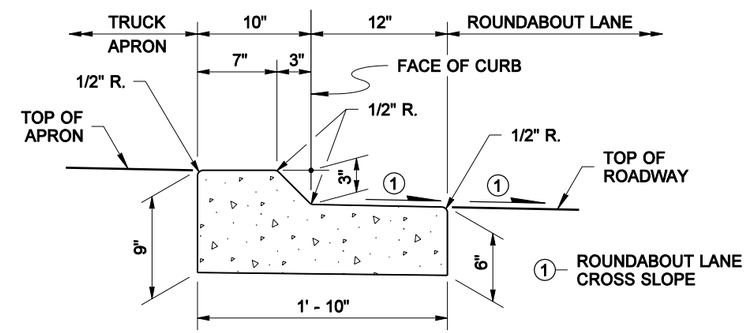

ROUNDABOUT TRUCK APRON CEMENT CONCRETE CURB AND GUTTER

FILE NAME	CEMENT CONCRETE CURBS								PLOT1
TIME	3:40:51 PM				REGION NO. 10	STATE WASH	FED.AID PROJ.NO.	Washington State Department of Transportation	GD-8
DATE	6/28/2006				JOB NUMBER				SHEET
PLOTTED BY	berensb								OF
DESIGNED BY									SHEETS
ENTERED BY	K. ALLEN				CONTRACT NO.	LOCATION NO.			
CHECKED BY									
PROJ. ENGR.									
REGIONAL ADM.		REVISION	DATE	BY					

P.E. STAMP BOX DATE

P.E. STAMP BOX DATE