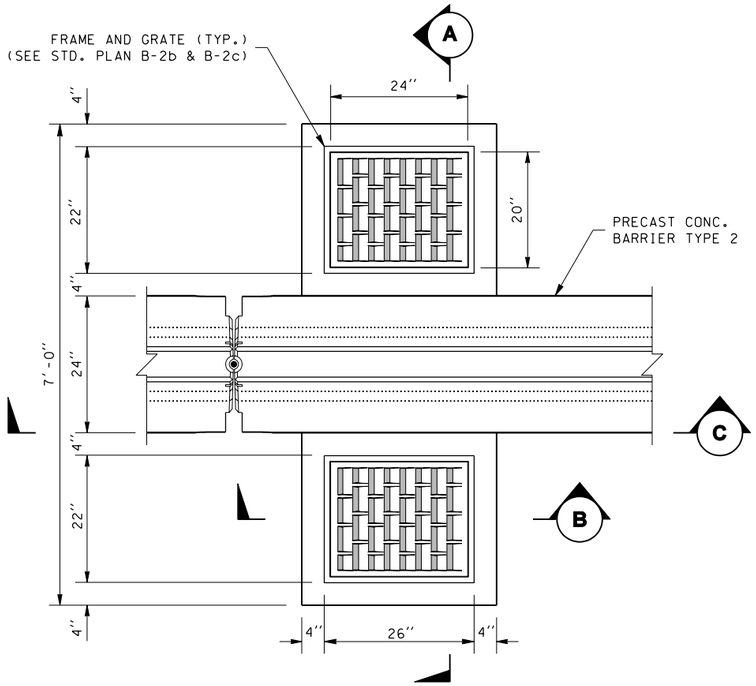

PLAN VIEW

BAR LIST		
MARK	SIZE	QTY.
1	#3	2
2		2
3		6
4		3
5		4
6		2
7		4

BENDING DIAGRAM

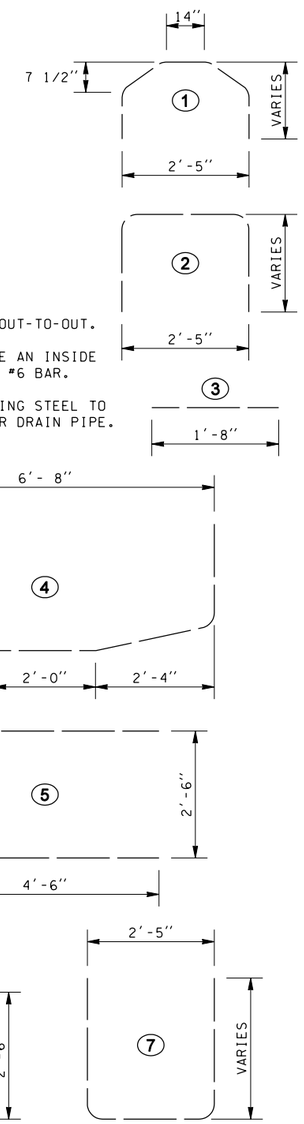

NOTES

1. ALL DIMENSIONS ARE OUT-TO-OUT.
2. ALL BENDS SHALL HAVE AN INSIDE DIAMETER EQUAL TO A #6 BAR.
3. ADJUST THE REINFORCING STEEL TO CLEAR THE CULVERT OR DRAIN PIPE.

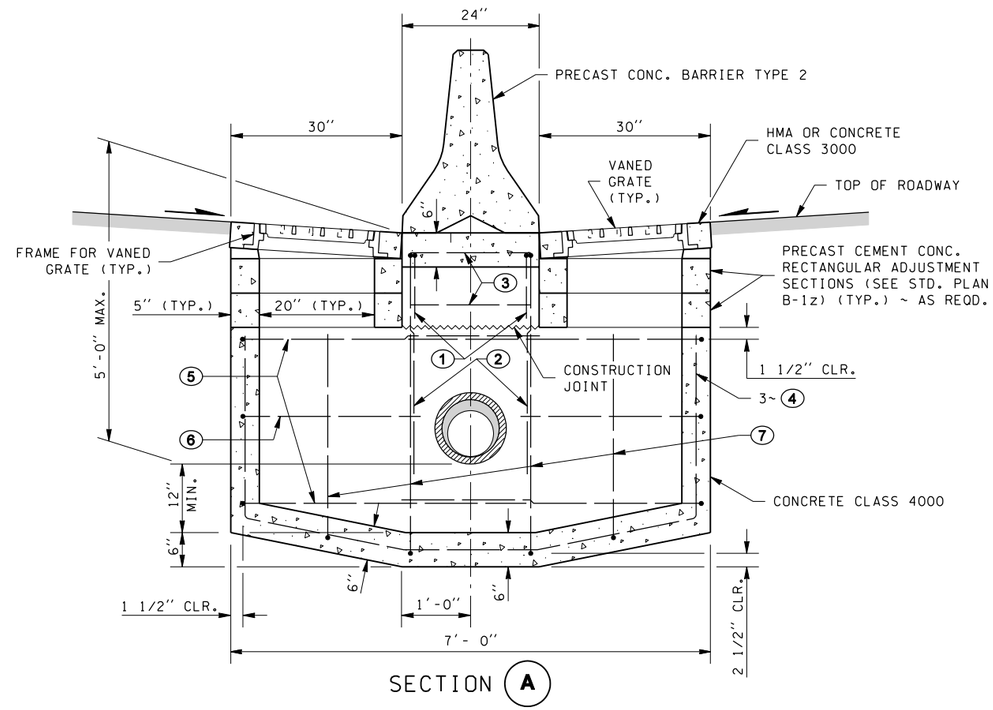

SECTION A

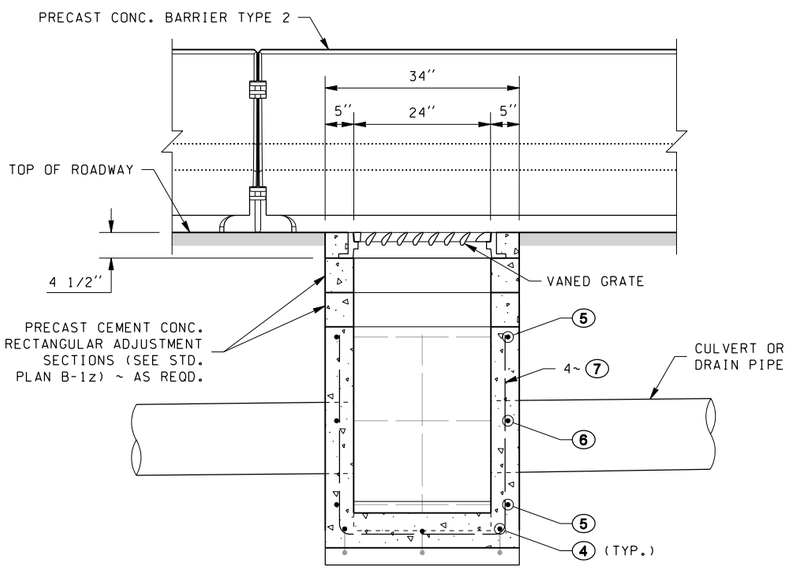

SECTION B

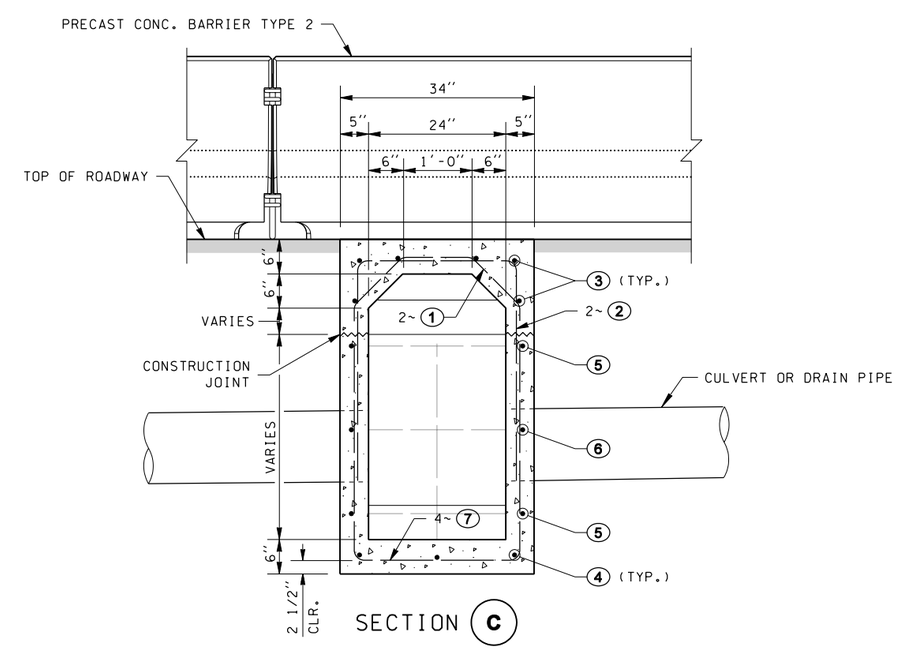

SECTION C

MEDIAN BARRIER CATCH BASIN
WITH PRECAST CONC. BARRIER TYPE 2

FILE NAME	S:\Design R P& S\4-Standards\2-Plan Sheet Library\01-Drainage Structures (DS)\DS-4.dgn					
TIME	2:30:58 PM				REGION NO. 10	STATE WASH	FED.AID PROJ.NO.
DATE	9/18/2006					
PLOTTED BY	berensb				JOB NUMBER	
DESIGNED BY	L. Hinson					
ENTERED BY	M. Sujka				CONTRACT NO.	LOCATION NO.
CHECKED BY						
PROJ. ENGR.						
REGIONAL ADM.		REVISION	DATE	BY		

P.E. STAMP BOX DATE

P.E. STAMP BOX DATE

Washington State Department of Transportation

DRAINAGE DETAILS

DS-4

SHEET OF SHEETS

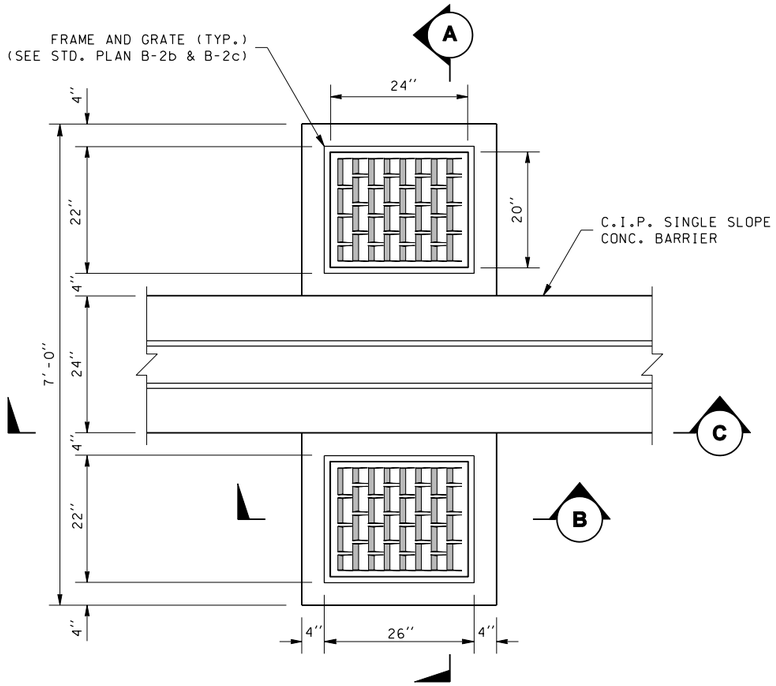

PLAN VIEW

BAR LIST		
MARK	SIZE	QTY.
1	#3	2
2		2
3		6
4		3
5		4
6		2
7		4

BENDING DIAGRAM

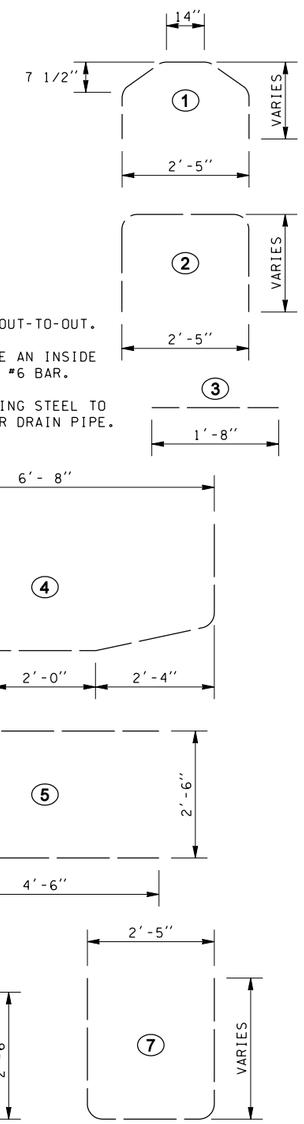

NOTES

1. ALL DIMENSIONS ARE OUT-TO-OUT.
2. ALL BENDS SHALL HAVE AN INSIDE DIAMETER EQUAL TO A #6 BAR.
3. ADJUST THE REINFORCING STEEL TO CLEAR THE CULVERT OR DRAIN PIPE.

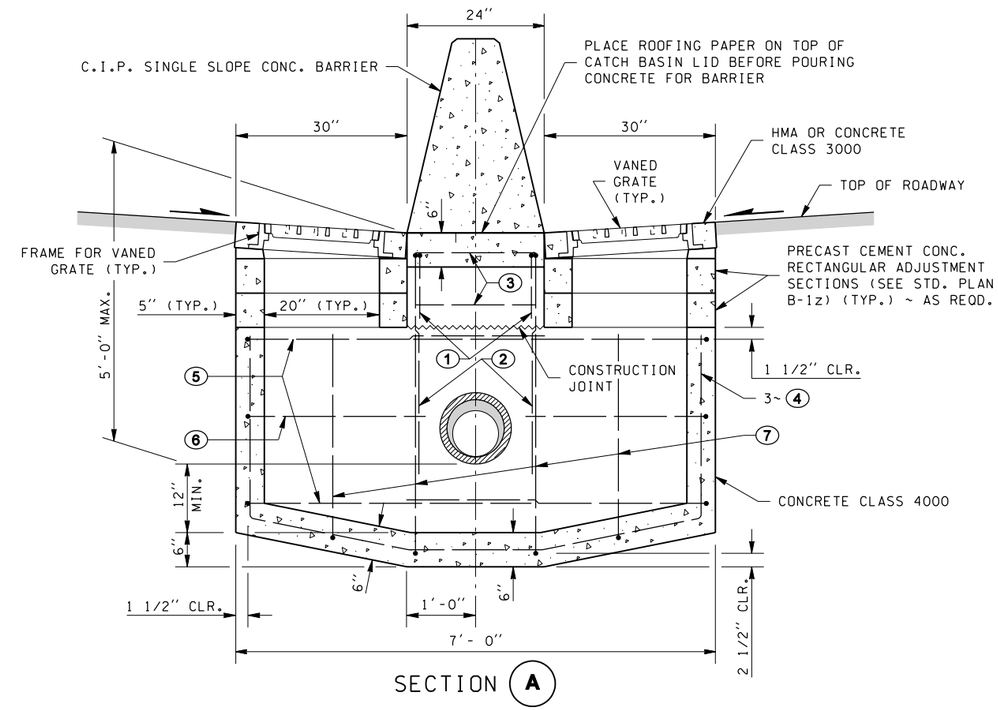

SECTION A

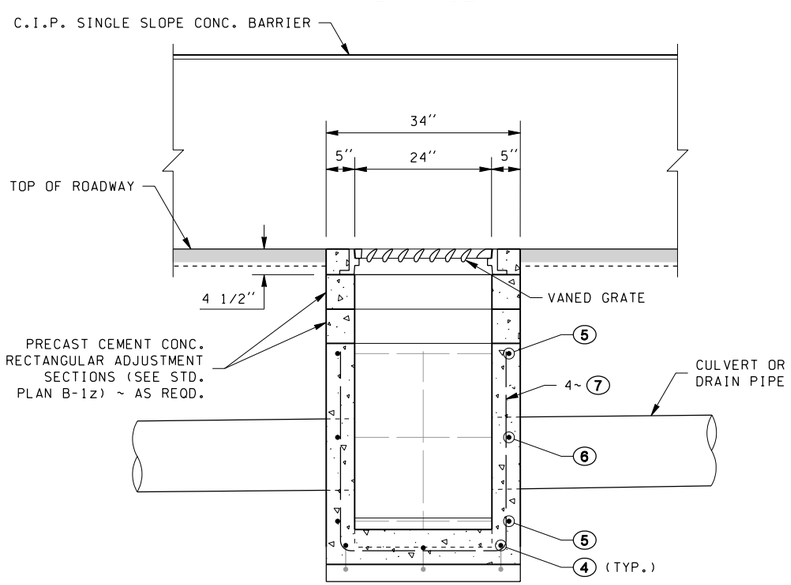

SECTION B

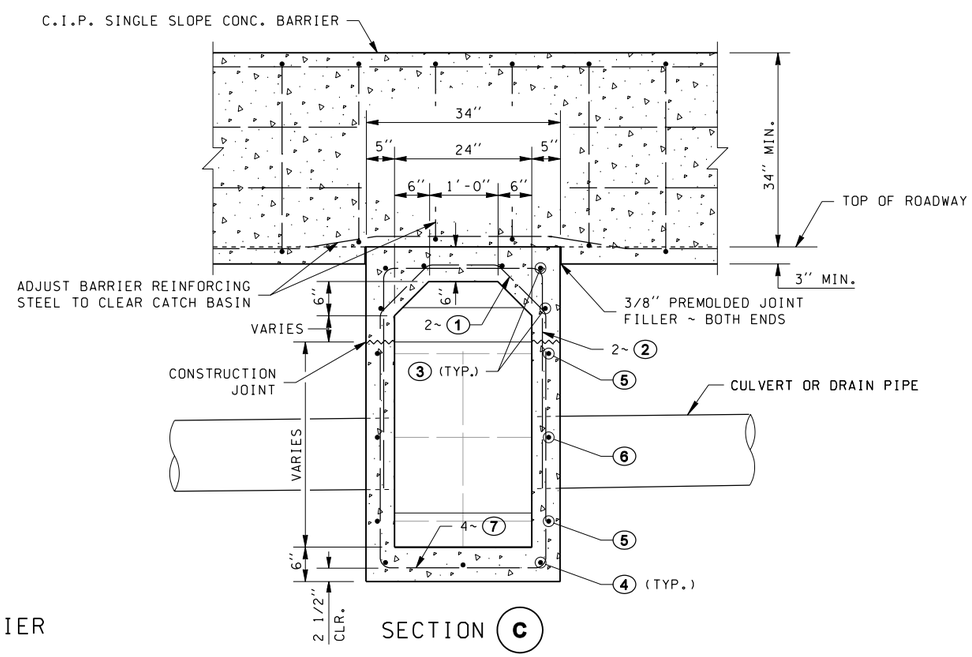

SECTION C

MEDIAN BARRIER CATCH BASIN
WITH CAST-IN-PLACE SINGLE SLOPE CONC. BARRIER

FILE NAME	S:\Design R P& S\4-Standards\2-Plan Sheet Library\01-Drainage Structures (DS)\DS-4.dgn						
TIME	2:32:00 PM				REGION NO. 10	STATE WASH	FED.AID PROJ.NO.
DATE	9/18/2006						
PLOTTED BY	berensb				JOB NUMBER		
DESIGNED BY	L. Hinson						
ENTERED BY	M. Sujka				CONTRACT NO.		LOCATION NO.
CHECKED BY							
PROJ. ENGR.							
REGIONAL ADM.		REVISION	DATE	BY			

P.E. STAMP BOX DATE

P.E. STAMP BOX DATE

Washington State Department of Transportation

DRAINAGE DETAILS

DS-4

SHEET OF SHEETS