700.01 General
700.02 References
700.03 Definitions
700.04 Clear Zone
700.05 Hazards to Be Considered for Mitigation
700.06 Median Considerations
700.07 Other Roadside Safety Features
700.08 Documentation

700.01 General

Roadside safety addresses the area outside of the roadway and is an important component of total highway design. There are numerous reasons why a vehicle leaves the roadway. Regardless of the reason, a forgiving roadside can reduce the seriousness of the consequences of a roadside encroachment. From a safety perspective, the ideal highway has roadsides and median areas that are flat and unobstructed by hazards.

Elements such as side slopes, fixed objects, and water are potential hazards that a vehicle might encounter when it leaves the roadway. These hazards present varying degrees of danger to the vehicle and its occupants. Unfortunately, geography and economics do not always allow ideal highway conditions. The mitigative measures to be taken depend on the probability of an accident occurring, the likely severity, and the available resources.

In order of preference, mitigative measures are: removal, relocation, reduction of impact severity (using breakaway features or making it traversable), and shielding with a traffic barrier. Consider cost (initial and life cycle costs) and maintenance requirements in addition to accident severity when selecting a mitigative measure. Use traffic barriers only when other measures cannot reasonably be accomplished. See Chapter 710 for additional information on traffic barriers.

700.02 References

A Policy on Geometric Design of *Highways and Streets* (Green Book), AASHTO, 2001

Revised Code of Washington (RCW) 47.24.020(2), "Jurisdiction, control"

RCW 47.32.130, "Dangerous objects and structures as nuisances"

City and County Design Standards (contained in the *Local Agency Guidelines,* M 36-63), WSDOT

Roadside Design Guide, AASHTO, 2002

Roadside Manual, M 25-30, WSDOT

Standard Plans for Road, Bridge, and Municipal Construction (Standard Plans), M 21-01, WSDOT

700.03 Definitions

ADT The average daily traffic for the design year under consideration.

backslope A sideslope that goes up as the distance increases from the roadway (cut slopes).

clear run-out area The area beyond the toe of a nonrecoverable slope available for safe use by an errant vehicle.

clear zone The total roadside border area, starting at the edge of the traveled way, available for use by errant vehicles. This area may consist of a shoulder, a recoverable slope, a nonrecoverable slope, and/or a clear run-out area. The clear zone cannot contain a critical fill slope.

critical fill slope A slope on which a vehicle is likely to overturn. Slopes steeper than 3H:1V are considered critical fill slopes.

Design Clear Zone The minimum target value used in highway design.

foreslope A sideslope that goes down as the distance increases from the roadway (fill slopes and ditch inslopes).

hazard A side slope, a fixed object, or water that, when struck, can result in unacceptable impact forces on the vehicle occupants or place the occupants in a hazardous position. A hazard can be either natural or manmade.

nonrecoverable slope A slope on which an errant vehicle will continue until it reaches the bottom, without having the ability to recover control. Fill slopes steeper than 4H:1V, but no steeper than 3H:1V, are considered nonrecoverable.

recoverable slope A slope on which the driver of an errant vehicle can regain control of the vehicle. Slopes of 4H:1V or flatter are considered recoverable.

recovery area The minimum target value used in highway design when a fill slope between 4H:1V and 3H:1V starts within the Design Clear Zone.

traffic barrier A longitudinal barrier, including bridge rail or an impact attenuator, used to redirect vehicles from hazards located within an established Design Clear Zone, to prevent median crossovers, to prevent errant vehicles from going over the side of a bridge structure, or (occasionally), to protect workers, pedestrians, or bicyclists from vehicular traffic.

traveled way The portion of the roadway intended for the movement of vehicles, exclusive of shoulders and lanes for parking, turning, and storage for turning.

700.04 Clear Zone

A clear roadside border area is a primary consideration when analyzing potential roadside and median hazards (as defined in 700.05). The intent is to provide as much clear, traversable area for a vehicle to recover as practical. The Design Clear Zone is used to evaluate the adequacy of the existing clear area and proposed modifications of the roadside. When considering the placement of new objects along the roadside or median, evaluate the potential for impacts and try to select locations with the least likelihood of an impact by an errant vehicle.

(1) Design Clear Zone on All Limited Access State Highways and Other State Highways Outside Incorporated Cities and Towns

Evaluate the Design Clear Zone when the Clear Zone column on the design matrices (see Chapter 325) indicates evaluate upgrade (EU) or Full Design Level (F) or when considering the placement of a new fixed object on the roadside or median. Use the Design Clear Zone Inventory form (Figures 700-2a & 2b) to identify potential hazards and propose corrective actions.

Guidance for establishing the Design Clear Zone for highways outside of incorporated cities is provided in Figure 700-1. This guidance also applies to limited access state highways within the city limits. Providing a clear recovery area that is consistent with this guidance does not require any additional documentation. However, there might be situations where it is not practical to provide these recommended distances. In these situations, document the decision as an evaluate upgrade or deviation as discussed in Chapter 330.

For additional Design Clear Zone guidance relating to roundabouts, see Chapter 915.

While not required, the designer is encouraged to evaluate potential hazards even when they are beyond the Design Clear Zone distances.

For state highways that are in an urban environment but outside of an incorporated city, evaluate both median and roadside clear zones as discussed above using Figure 700-1. However, there might be some flexibility in establishing the Design Clear Zone in urbanized areas adjacent to incorporated cities and towns. To achieve this flexibility, an evaluation of the impacts including safety, aesthetics, the environment, economics, modal needs, and access control can be used to establish the Design Clear Zone. This discussion, analysis, and agreement must take place early in the consideration of the median and roadside designs. An agreement on the responsibility for these median and roadside sections must be formalized with the city and/or county. The justification for the design decision for the selected Design Clear Zone must be documented as part of a project or corridor analysis. (See Chapter 330.)

(2) Design Clear Zone Inside Incorporated Cities and Towns

For managed access state highways within an urban area, it is recognized that in many cases it will not be practical to provide the Design Clear Zone distances shown in Figure 700-1. Roadways within an urban area generally have curbs and sidewalks and might have objects such as trees, poles, benches, trash cans, landscaping, and transit shelters along the roadside.

(a) ***Roadside.*** For managed access state highways, it is the city's responsibility to establish an appropriate Design Clear Zone in accordance with guidance contained in the City and County Design Standards. Document the Design Clear Zone established by the city in the Design Documentation Package.

(b) ***Median.*** For managed access state highways with raised medians, the median's Design Clear Zone is evaluated using Figure 700-1. In some instances, a median analysis will show that certain median designs provide significant benefits to overall corridor or project operations. In these cases, flexibility in establishing the Design Clear Zone is appropriate. To achieve this flexibility, an evaluation of the impacts (including safety, aesthetics, the environment, economics, modal needs, and access control) can be used to establish the median clear zone. This discussion, analysis, and agreement must take place early in the consideration of the flexible median design. An agreement on the responsibility for these median sections must be formalized with the city. The justification for the design decision for the selected Design Clear Zone must be documented as part of a project or corridor analysis. (See Chapter 330.)

(3) Design Clear Zone and Calculations

The Design Clear Zone guidance provided in Figure 700-1 is a function of the posted speed, side slope, and traffic volume. There are no distances in the table for 3H:1V fill slopes. Although fill slopes between 4H:1V and 3H:1V are considered traversable if free of fixed objects, these slopes are defined as nonrecoverable slopes. A vehicle might be able to begin recovery on the shoulder, but will be unable to further this recovery until reaching a flatter area (4H:1V or flatter) at the toe of the slope. Under these conditions, the Design Clear Zone distance is called a recovery area. The method used to calculate the recovery area and an example are shown in Figure 700-3.

For ditch sections, the following criteria determine the Design Clear Zone:

(a) For ditch sections with foreslopes 4H:1V or flatter (see Figure 700-4, Case 1, for an example) the Design Clear Zone distance is the greater of the following:

- The Design Clear Zone distance for a 10H:1V cut section based on speed and the average daily traffic (ADT).
- A horizontal distance of 5 feet beyond the beginning of the backslope.

When a backslope steeper than 3H:1V continues for a horizontal distance of 5 feet beyond the beginning of the backslope, it is not necessary to use the 10H:1V cut slope criteria.

(b) For ditch sections with foreslopes steeper than 4H:1V, and backslopes steeper than 3H:1V the Design Clear Zone distance is 10 feet horizontal beyond the beginning of the backslope. (See Figure 700-4, Case 2, for an example.)

(c) For ditch sections with foreslopes steeper than 4H:1V and backslopes 3H:1V or flatter, the Design Clear Zone distance is the distance established using the recovery area formula (Figure 700-3). (See also Figure 700-4, Case 3, for an example.)

700.05 Hazards to Be Considered for Mitigation

There are three general categories of hazards: side slopes, fixed objects, and water. The following sections provide guidance for determining when these obstacles present a significant hazard to an errant motorist. In addition, several conditions require special consideration:

- Locations with high accident rate histories.
- Locations with pedestrian and bicycle usage. See Chapters 1020, "Bicycle Facilities," and 1025, "Pedestrian Design Considerations."

- Playgrounds, monuments, and other locations with high social or economic value.
- Redirectional land forms, also referred to as earth berms, were installed to mitigate hazards located in depressed medians and at roadsides. They were constructed of materials that provided support for a traversing vehicle. With slopes in the range of 2H:1V to 3H:1V, they were intended to redirect errant vehicles. The use of redirectional land forms has been discontinued as a means for mitigating fixed objects. Where redirectional land forms currently exist as mitigation for a fixed object, ensure that the hazard they were intended to mitigate is removed, relocated, made crashworthy, or shielded with barrier. Landforms may be used to provide a smooth surface at the base of a rock cut slope.

Use of a traffic barrier for hazards other than those described below requires justification in the Design Documentation Package.

(1) Side Slopes

(a) ***Fill Slopes.*** Fill slopes can present a hazard to an errant vehicle with the degree of severity dependent upon the slope and height of the fill. Providing fill slopes that are 4H:1V or flatter can mitigate this hazard. If flattening the slope is not feasible or cost effective, the installation of a barrier might be appropriate. Figure 700-5 represents a selection procedure used to determine whether a fill side slope constitutes a hazard for which a barrier is a cost-effective mitigation. The curves are based on the severity indexes and represent the points where total costs associated with a traffic barrier are equal to the predicted accident cost associated with selected slope heights without traffic barrier. If the ADT and height of fill intersect on the "Barrier Recommended" side of the embankment slope curve, then provide a barrier if flattening the slope is not feasible or cost effective. Do not use Figure 700-5 for slope design. Design guidance for slopes is in Chapters 430 and 640. Also, if the figure indicates that barrier is not recommended at an existing slope, that result is not justification for a deviation.

For example, if the ADT is 4,000 and the embankment height is 10 feet, barrier will be cost effective for a 2H:1V slope, but not for a 2.5H:1V slope.

This process only addresses the potential hazard of the slope. Obstacles on the slope can compound the hazard. Where barrier is not cost effective, use the recovery area formula to evaluate fixed objects on critical fill slopes less than 10 feet high.

(b) ***Cut Slopes.*** A cut slope is usually less of a hazard than a traffic barrier. The exception is a rock cut with a rough face that might cause vehicle snagging rather than providing relatively smooth redirection.

Analyze the potential motorist risk and the benefits of treatment of rough rock cuts located within the Design Clear Zone. A cost-effectiveness analysis that considers the consequences of doing nothing, removal, or smoothing of the cut slope, and all other viable options to reduce the severity of the hazard, can be used to determine the appropriate treatment. Also consider options to reduce the potential for roadway departures. Some potential options are:

- Graded landform along the base of a rock cut.
- Flexible barrier.
- More rigid barrier.
- Rumble strips.

Conduct an individual investigation for each rock cut or group of rock cuts. Select the most cost-effective treatment.

(2) Fixed Objects

Consider the following objects for mitigation:

- Wooden poles or posts with cross sectional area greater than 16 square inches that do not have breakaway features.
- Nonbreakaway steel sign posts.
- Nonbreakaway light standards.
- Trees having a diameter of 4 inches or more measured at 6 inches above the ground surface.

- Fixed objects extending above the ground surface by more than 4 inches; for example, boulders, concrete bridge rails, signal and electrical cabinets, piers, and retaining walls.
- Existing guardrail that does not conform to current design guidance. (See Chapter 710.)
- Drainage items, such as culvert and pipe ends.

Mitigate hazards that exist within the Design Clear Zone when feasible. Although limited in application, there may be situations where removal of a hazard outside of the R.O.W. is appropriate. The possible mitigative measures are listed below in order of preference.

- Remove.
- Relocate.
- Reduce impact severity (using a breakaway feature).
- Shield the object by using longitudinal barrier or impact attenuator.

(a) **Trees.** When evaluating new plantings or existing trees, consider the maximum allowable diameter of 4 inches measured at 6 inches above the ground when the tree has matured. When removing trees within the Design Clear Zone, complete removal of stumps is preferred. However, to avoid significant disturbance of the roadside vegetation, larger stumps may be mitigated by grinding or cutting them flush to the ground and grading around them. See the *Roadside Manual* for further guidance on the treatment of the disturbed roadside.

(b) **Mailboxes.** Ensure that all mailboxes located within the Design Clear Zone have supports and connections as shown in the Standard Plans. The height from the ground to the bottom of the mailbox is 3 feet 3 inches. This height may vary from 3 feet 3 inches to 4 feet if requested by the mail carrier. If the desired height is to be different from 3 feet 3 inches provide the desired height in the contract plans. See Figure 700-6 for installation guidelines.

In urban areas where sidewalks are prevalent, contact the postal service to determine the most appropriate mailbox location. Locate mailboxes on limited access highways in accordance with Chapter 1430 "Limited Access". A turnout, as shown on Figure 700-6, is not required on limited access highways with shoulders of 6 feet or more where only one mailbox is to be installed. On managed access highways, mailboxes must be on the right-hand side of the road in the direction of travel of the postal carrier. Avoid placing mailboxes along high-speed, high-volume highways. Locate Neighborhood Delivery and Collection Box Units (NDCBUs) outside the Design Clear Zone.

(c) **Culvert Ends.** Provide a traversable end treatment when the culvert end section or opening is on the roadway side slope and within the Design Clear Zone. This can be accomplished for small culverts by beveling the end to match the side slope, with a maximum of 4 inches extending out of the side slope.

Bars might be necessary to provide a traversable opening for larger culverts. Place bars in the plane of the culvert opening in accordance with the Standard Plans when:

1. Single cross culvert opening exceeds 40 inches measured parallel to the direction of travel.

2. Multiple cross culvert openings that exceed 30 inches each, measured parallel to the direction of travel.

3. Culvert approximately parallel to the roadway that has an opening exceeding 24 inches measured perpendicular to the direction of travel.

Bars are permitted where they will not significantly affect the stream hydraulics and where debris drift is minor. Consult the regional Maintenance Office to verify these conditions. If debris drift is a concern, consider options to reduce the amount of debris that can enter the pipe. (See the *Hydraulics Manual*). Other treatments are extending the culvert to move the end outside the Design Clear Zone or installing a traffic barrier.

(d) **Sign Posts.** Whenever possible, locate signs behind existing or planned traffic barrier installations to eliminate the need for breakaway posts. Place them at least 25 feet from the end of the barrier terminal and with the sign face behind the barrier. When barrier is not present, use terrain features to reduce the likelihood of an errant vehicle striking the sign posts. Whenever possible, depending on the type of sign and the sign message, adjust the sign location to take advantage of barrier or terrain features. This will reduce accident potential and, possibly, future maintenance costs. See Chapter 820 for additional information regarding the placement of signs.

Sign posts with cross sectional areas greater than 16 square inches that are within the Design Clear Zone and not located behind a barrier must have breakaway features as shown in the Standard Plans.

(e) **Traffic Signal Standards/Posts/Supports.** Breakaway signal posts generally are not practical or desirable. Since these supports are generally located at intersecting roadways, there is a higher potential for a falling support to impact vehicles and/or pedestrians. In addition, signal supports that have overhead masts may be too heavy for a breakaway design to work properly. Other mitigation such as installing a traffic barrier is also very difficult. With vehicles approaching the support from many different angles, a barrier would have to surround the support and would be subject to impacts at high angles. Additionally, barrier can inhibit pedestrian movements. Therefore, barrier is generally not an option. However, since speeds near signals are generally lower, the potential for a severe impact is reduced. For these reasons, the only mitigation is to locate the support as far from the traveled way as possible.

In locations where signals are used for ramp meters, the supports can be made breakaway as shown on the Standard Plan.

(f) **Fire Hydrants.** Fire Hydrants are allowed on WSDOT right of way by franchise or permit. Fire hydrants that are made of cast iron can be expected to fracture on impact and can therefore be considered a breakaway device. Any portion of the hydrants that will not be breakaway must not extend more then 4 inches above the ground. In addition, the hydrant must have a stem that will shut off water flow in the event of an impact. Mitigate all other hydrants.

(g) **Utility Poles.** Since utilities often share the right of way, utility objects such as poles will often be located along the roadside. It is undesirable/impractical to install barrier for all of these objects so mitigation is usually in the form of relocation (underground or to the edge of the right of way) or delineation. In some instances where there is a history of impacts with poles and relocation is not possible, a breakaway design might be appropriate.

Contact Headquarters Design for information on breakaway features. Coordinate with the Utilities Office where appropriate.

(h) **Light Standards.** Provide breakaway light standards unless fixed light standards can be justified. Fixed light standards may be appropriate in areas of extensive pedestrian concentrations, such as adjacent to bus shelters. Document the decision to use fixed bases in the Design Documentation Package.

(3) Water

Water with a depth of 2 feet or more and located with a likelihood of encroachment by an errant vehicle must be considered for mitigation on a project-by-project basis. Consider the length of time traffic is exposed to this hazard and its location in relationship to other highway features such as curves.

Analyze the potential motorist risk and the benefits of treatment of bodies of water located within the Design Clear Zone. A cost-effectiveness analysis that considers the consequences of doing nothing versus installing a longitudinal barrier can be used to determine the appropriate treatment.

For fencing considerations along water features, see Chapter 1460.

700.06 Median Considerations

Medians must be analyzed for the potential of an errant vehicle to cross the median and encounter oncoming traffic. Median barriers are normally used on limited access, multilane, high-speed, high traffic volume highways. These highways generally have posted speeds of 45 mph or greater. Median barrier is not normally placed on collectors or other state highways that do not have limited access control. Providing access through median barrier requires openings and, therefore, end-treatments.

Provide median barrier on full access control, multilane highways with median widths of 50 feet or less and posted speeds of 45 mph or more. Consider median barrier on highways with wider medians or lower posted speeds when there is a history of cross median accidents.

When installing a median barrier, provide left-side shoulder widths as shown in Chapters 430 and 440 and shy distance as shown in Chapter 710. Consider a wider shoulder area where the barrier will cast a shadow on the roadway and hinder the melting of ice. See Chapter 640 for additional criteria for placement of median barrier. See Chapter 710 for information on the types of barriers that can be used. See Chapter 650 for lateral clearance on the inside of a curve to provide the required stopping sight distance.

When median barrier is being placed in an existing median, identify the existing crossovers and enforcement observation points. Provide the necessary median crossovers in accordance with Chapter 960, considering enforcement needs. Chapter 1050 provides guidance on HOV enforcement.

700.07 Other Roadside Safety Features

(1) Rumble Strips

Rumble strips are grooves or rows of raised pavement markers placed perpendicular to the direction of travel to alert inattentive drivers.

There are three kinds of rumble strips:

(a) **Roadway rumble strips** are placed across the traveled way to alert drivers approaching a change of roadway condition or a hazard that requires substantial speed reduction or other maneuvering. Examples of locations where roadway rumble strips may be used are in advance of:

- Stop controlled intersections.
- Port of entry/customs stations.
- Lane reductions where accident history shows a pattern of driver inattention.

They may also be placed at locations where the character of the roadway changes, such as at the end of a freeway.

Contact the Headquarters Design Office for additional guidance on the design and placement of roadway rumble strips.

Document justification for using roadway rumble strips.

(b) **Shoulder rumble strips** are placed on the shoulders just beyond the traveled way to warn drivers when they are entering a part of the roadway not intended for routine traffic use. Shoulder rumble strips may be used when an analysis indicates a problem with run-off-the-road accidents due to inattentive or fatigued drivers. A comparison of rolled-in and milled-in Shoulder Rumble Strips (SRS) has determined that milled-in rumble strips, although more expensive, are more cost effective. Milled-in rumble strips are recommended.

When SRS are used, discontinue them where no edge stripe is present such as at intersections and where curb and gutter are present. Where bicycle travel is allowed, discontinue SRS at locations where shoulder width reductions can cause bicyclists to move into or across the area where rumble strips would normally be placed, such as shoulders adjacent to bridges with reduced shoulder widths.

SRS patterns vary depending on the likelihood of bicyclists being present along the highway shoulder, and whether they are placed on divided or undivided highways. Rumble strip patterns for undivided highways are shallower and may be

narrower than patterns used on divided highways. They also provide gaps in the pattern, providing opportunities for bicycles to move across the pattern without having to ride across the grooves. There are four shoulder rumble strip patterns. Consult the Standard Plans for the patterns and construction details.

1. **Divided Highways**

SRS are required on both the right and left shoulders of rural Interstate highways. Consider them on both shoulders of rural divided highways. Use the Shoulder Rumble Strip Type 1 pattern on divided highways.

Omitting SRS on rural highways is a design exception (DE) under any one of the following conditions:

- When another project scheduled within two years of the proposed project will overlay or reconstruct the shoulders or will use the shoulders for detours.
- When a pavement analysis determines that installing SRS will result in inadequate shoulder strength.
- When overall shoulder width will be less than 4 feet wide on the left and 6 feet wide on the right.

2. **Undivided Highways**

SRS are not required on undivided highways, but may be used where run-off-the-road accident experience is high. SRS usage on the shoulders of undivided highways demands strategic application because bicycle usage is more prevalent along the shoulders of the undivided highway system. Rumble strips affect the comfort and control of bicycle riders; consequently, their use is to be limited to highway corridors that experience high levels of run-off-the-road accidents. Apply the following criteria in evaluating the appropriateness of rumble strips on the shoulders of undivided highways.

- Use on rural roads only.
- Ensure shoulder pavement is structurally adequate to support milled rumble strips.
- Posted speed is 45 mph or greater.
- Ensure that at least 4 feet of usable shoulder remains between the rumble strip and the outside edge of shoulder. If guardrail or barrier is present, increase the dimension to 5 feet of usable shoulder.
- Preliminary evaluation indicates a run-off-the-road accident experience of approximately 0.6 crashes per mile per year, or approximately 34 crashes per 100 million miles of travel. (These values are intended to provide relative comparison of crash experience and are not to be used as absolute guidance on whether rumble strips are appropriate.)
- Do not place shoulder rumble strips on downhill grades exceeding 4% for more than 500 feet in length along routes where bicyclists are frequently present.
- An engineering analysis indicates a run-off-the-road accident experience considered correctable by shoulder rumble strips.
- Consult the regional members of the Washington Bicycle and Pedestrian Advisory Committee to determine bicycle usage along a route, and involve them in the decision-making process when considering rumble strips along bike touring routes or other routes where bicycle events are regularly held.

The Shoulder Rumble Strip Type 2 or Type 3 pattern is used on highways with minimal bicycle traffic. When bicycle traffic on the shoulder is high, the Shoulder Rumble Strip Type 4 pattern is used.

Shoulder rumble strip installation considered at any other locations must involve the WSDOT Bicycle and Pedestrian Advisory Committee as a partner in the decision-making process.

Consult the following web site for guidance on conducting an engineering analysis: http://www.wsdot.wa.gov/EESC/Design/Policy/RoadsideSafety/Chapter700/Chapter700B.htm

(c) **Centerline rumble strips** are placed on the centerline of undivided highways to alert drivers that they are entering the opposing lane. They are applied as a countermeasure for crossover accidents. Centerline rumble strips are installed with no differentiation between passing permitted and no passing areas. Pavement marking should be refreshed when removed by centerline rumble strips.

Drivers tend to move to the right to avoid driving on centerline rumble strips. Narrow lane and shoulder widths may lead to dropping a tire off the pavement when drivers have shifted their travel path. Centerline rumble strips are inappropriate when the combined lane and shoulder widths in each direction is less than twelve feet. See Chapters 430 and 440 for guidance on lane and shoulder width. Consider short sections of roadway that are below this width only when added for route continuity.

Apply the following criteria in evaluating the appropriateness of centerline rumble strips:

- An engineering analysis indicates a crossover accident history with collisions considered correctable by centerline rumble strips. Review the accident history to determine the frequency of collisions with contributing circumstances such as inattention, apparently fatigued, apparently asleep, over centerline, or on wrong side of road.
- Centerline rumble strips are most appropriate on rural roads, but with special consideration may also be appropriate for urban roads. Some concerns specific to urban areas are noise in densely populated areas, the frequent need to interrupt the rumble strip pattern to accommodate left turning vehicles, and a reduced effectiveness at lower speeds (35 MPH and below).
- Ensure the roadway pavement is structurally adequate to support milled rumble strips. Consult the region's Materials Engineer to verify pavement adequacies.
- Centerline rumble strips are not appropriate where two-way left-turn lanes exist.

(2) Headlight Glare Considerations

Headlight glare from opposing traffic can cause safety problems. Glare can be reduced by the use of wide medians, separate alignments, earth mounds, plants, concrete barrier, and by glare screens. Consider long term maintenance when selecting the treatment for glare. When considering earth mound and planting to reduce glare, see the *Roadside Manual* for additional guidance. When considering glare screens, see Chapter 650 for lateral clearance on the inside of a curve to provide the required stopping sight distance. In addition to reducing glare, taller concrete barriers also provide improved crash performance for larger vehicles such as trucks.

Glare screen is relatively expensive and its use must be justified and documented. It is difficult to justify the use of glare screen where the median width exceeds 20 feet, the ADT is less than 20,000 vehicles per day, or the roadway has continuous lighting. Consider the following factors when assessing the need for glare screen:

- Higher rate of night accidents compared to similar locations or statewide experience.
- Higher than normal ratio of night to day accidents.
- Unusual distribution or concentration of nighttime accidents.
- Over representation of older drivers in night accidents.
- Combination of horizontal and vertical alignment, particularly where the roadway on the inside of a curve is higher than the roadway on the outside of the curve.
- Direct observation of glare.
- Public complaints concerning glare.

The most common glare problem is between opposing main line traffic. Other conditions for which glare screen might be appropriate are:

- Between a highway and an adjacent frontage road or parallel highway, especially where opposing headlights might seem to be on the wrong side of the driver.

- At an interchange where an on-ramp merges with a collector distributor and the ramp traffic might be unable to distinguish between collector and main line traffic. In this instance, consider other solutions, such as illumination.
- Where headlight glare is a distraction to adjacent property owners. Playgrounds, ball fields, and parks with frequent nighttime activities might benefit from screening if headlight glare interferes with these activities.

There are currently three basic types of glare screen available: chain link (see Standard Plans), vertical blades, and concrete barrier. (See Figure 700-7.)

When the glare is temporary (due to construction activity), consider traffic volumes, alignment, duration, presence of illumination, and type of construction activity. Glare screen may be used to reduce rubbernecking associated with construction activity, but less expensive methods, such as plywood that seals off the view of the construction area, might be more appropriate.

700.08 Documentation

A list of documents that are required to be preserved in the Design Documentation Package (DDP) or the Project File (PF) is on the following website:
http://www.wsdot.wa.gov/eesc/design/projectdev/

Design Clear Zone Distances for State Highways Outside Incorporated Cities**

(In feet from edge of traveled way***)

Posted Speed mph	Average Daily Traffic	Cut Section (Backslope) (H:V)						Fill Section (H:V)					
		3:1	4:1	5:1	6:1	8:1	10:1	3:1	4:1	5:1	6:1	8:1	10:1
35 or Less		The Design Clear Zone distance is 10 feet											
40	Under 250	10	10	10	10	10	10	*	13	12	11	11	10
	251-800	11	11	11	11	11	11	*	14	14	13	12	11
	801-2000	12	12	12	12	12	12	*	16	15	14	13	12
	2001-6000	14	14	14	14	14	14	*	17	17	16	15	14
	Over 6000	15	15	15	15	15	15	*	19	18	17	16	15
45	Under 250	11	11	11	11	11	11	*	16	14	13	12	11
	251-800	12	12	13	13	13	13	*	18	16	14	14	13
	801-2000	13	13	14	14	14	14	*	20	17	16	15	14
	2001-6000	15	15	16	16	16	16	*	22	19	17	17	16
	Over 6000	16	16	17	17	17	17	*	24	21	19	18	17
50	Under 250	11	12	13	13	13	13	*	19	16	15	13	13
	251-800	13	14	14	15	15	15	*	22	18	17	15	15
	801-2000	14	15	16	17	17	17	*	24	20	18	17	17
	2001-6000	16	17	17	18	18	18	*	27	22	20	18	18
	Over 6000	17	18	19	20	20	20	*	29	24	22	20	20
55	Under 250	12	14	15	16	16	17	*	25	21	19	17	17
	251-800	14	16	17	18	18	19	*	28	23	21	20	19
	801-2000	15	17	19	20	20	21	*	31	26	23	22	21
	2001-6000	17	19	21	22	22	23	*	34	29	26	24	23
	Over 6000	18	21	23	24	24	25	*	37	31	28	26	25
60	Under 250	13	16	17	18	19	19	*	30	25	23	21	20
	251-800	15	18	20	20	21	22	*	34	28	26	23	23
	801-2000	17	20	22	22	23	24	*	37	31	28	26	25
	2001-6000	18	22	24	25	26	27	*	41	34	31	29	28
	Over 6000	20	24	26	27	28	29	*	45	37	34	31	30
65	Under 250	15	18	19	20	21	21	*	33	27	25	23	22
	251-800	17	20	22	22	24	24	*	38	31	29	26	25
	801-2000	19	22	24	25	26	27	*	41	34	31	29	28
	2001-6000	20	25	27	27	29	30	*	46	37	35	32	31
	Over 6000	22	27	29	30	31	32	*	50	41	38	34	33
70	Under 250	16	19	21	21	23	23	*	36	29	27	25	24
	251-800	18	22	23	24	26	26	*	41	33	31	28	27
	801-2000	20	24	26	27	28	29	*	45	37	34	31	30
	2001-6000	22	27	29	29	31	32	*	50	40	38	34	33
	Over 6000	24	29	31	32	34	35	*	54	44	41	37	36

* When the fill section slope is steeper than 4H:1V but net steeper than 3H:1V, the Design Clear Zone distance is modified by the recovery area formula (Figure 700-3) and is referred to as the recovery area. The basic philosophy behind the recovery area formula is that the vehicle can traverse these slopes but cannot recover (control steering) and, therefore, the horizontal distance of these slopes is added to the Design Clear Zone distance to form the recovery area.

** This figure also applies to limited access state highways in cities and median areas on managed access state highways in cities. See 700.04 for guidance on managed access state highways within incorporated cities.

*** See 700.03 for the definition of traveled way.

Design Clear Zone Distance Table

Figure 700-1

Washington State
Department of Transportation

Design Clear Zone Inventory

Region	SR	Control Section	MP to MP	Date
Project Number	Project Title		Responsible Unit	

Item Number	MP to MP	Distance From Traveled Way L	Distance From Traveled Way R	Description	Corrective Actions Considered (2)	Estimated Cost to Correct	Correction Planned (1) Yes	Correction Planned (1) No

(1) Only one "Yes" or "No" per item number. Corrections not planned must be explained on reverse side.
(2) A list of Location 1 & 2 Utility Objects to the forwarded to the region Utility Office for coordination per Control Zone Guidelines.

DOT Form 410-026 EF
Revised 9/02

Design Clear Zone Inventory Form
Figure 700-2a

Item Number	Reasons for Not Taking Corrective Action

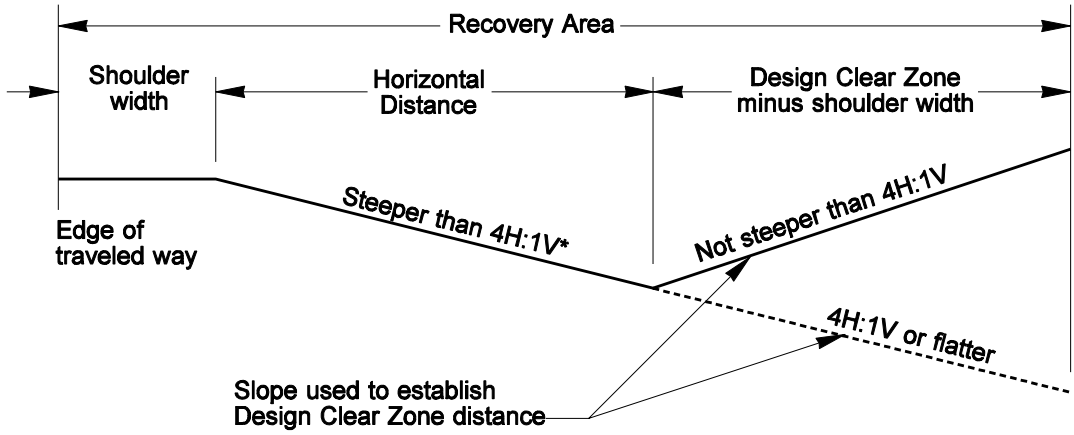

* Recovery area normally applies to slopes steeper than 4H:1V, but no steeper than 3H:1V. For steeper slopes, the recovery area formula may be used as a guide if the embankment height is 10 feet or less.

Formula:

Recovery area = (shoulder width) + (horizontal distance)
+ (Design Clear Zone distance - shoulder width)

Example:

Fill section (slope 3H:1V or steeper)

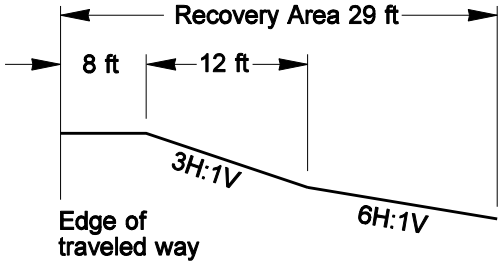

Conditions: Speed – 45 mph
Traffic – 3000 ADT
Slope – 3H:1V

Criteria: Slope 3H:1V – use Recovery area formula

Recovery area = (shoulder width) + (horizontal distance)
+ (Design Clear Zone distance - shoulder width)
= 8 + 12 + (17-8)
= 29 feet

Recovery Area
Figure 700-3

Cut section with ditch (fore slope 4H:1V or flatter)

Conditions: Speed - 55 mph
Traffic - 4200 ADT
Slope - 4H:1V

Criteria: Greater of
(1) Design Clear Zone for 10H:1V Cut Section, 23 feet
(2) 5 feet horizontal beyond beginning of back slope, 22 feet

Design Clear Zone = 23 feet

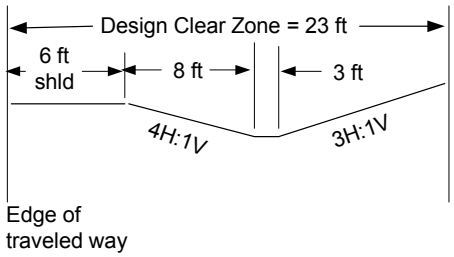

Case 1

Cut section with ditch (fore slope 3H:1V or steeper and back slope steeper than 3H:1V)

Conditions: NA

Criteria: 10 feet horizontal beyond beginning of back slope

Design Clear Zone = 19 feet

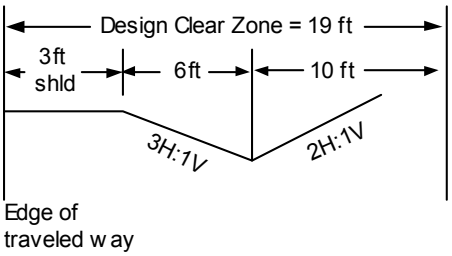

Case 2

Cut section with ditch (fore slope 3H:1V or steeper and back slope not steeper than 3H:1V)

Conditions: Speed - 45 mph
Traffic - 3000 ADT
Foreslope - 2H:1V
Back slope 4H:1V

Criteria: Use recovery area formula

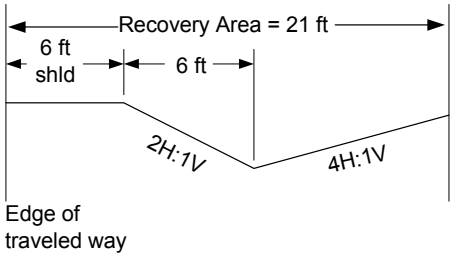

Recovery Area = (shoulder width) + (horizontal distance) + (Design Clear Zone distance - shoulder width)
= 6 + 6 + (15 - 6)
= 21 feet

Case 3

Design Clear Zone for Ditch Sections
Figure 700-4

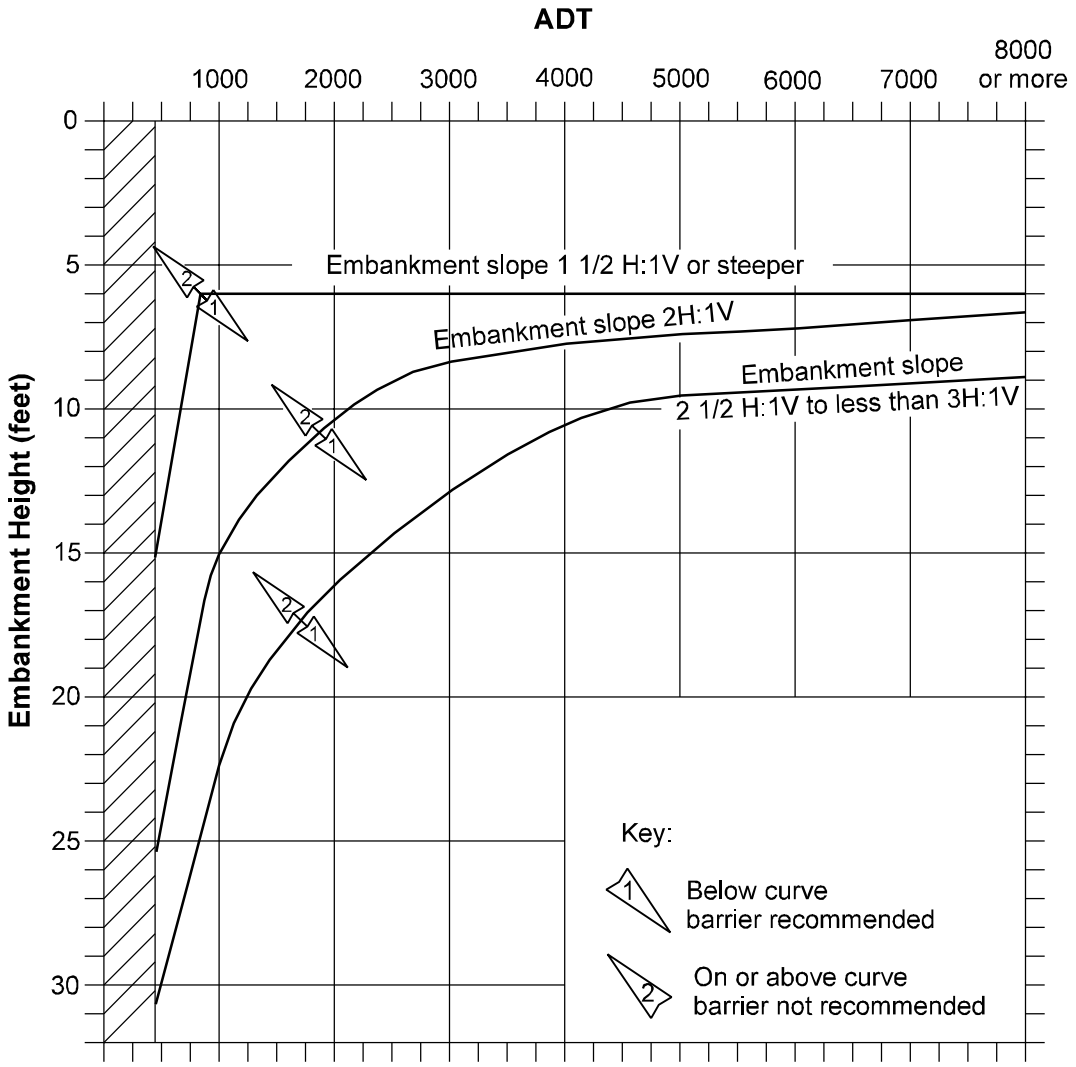

Note: Routes with ADTs under 400 may be evaluated on a case by case basis.

Guidelines for Embankment Barrier
Figure 700-5

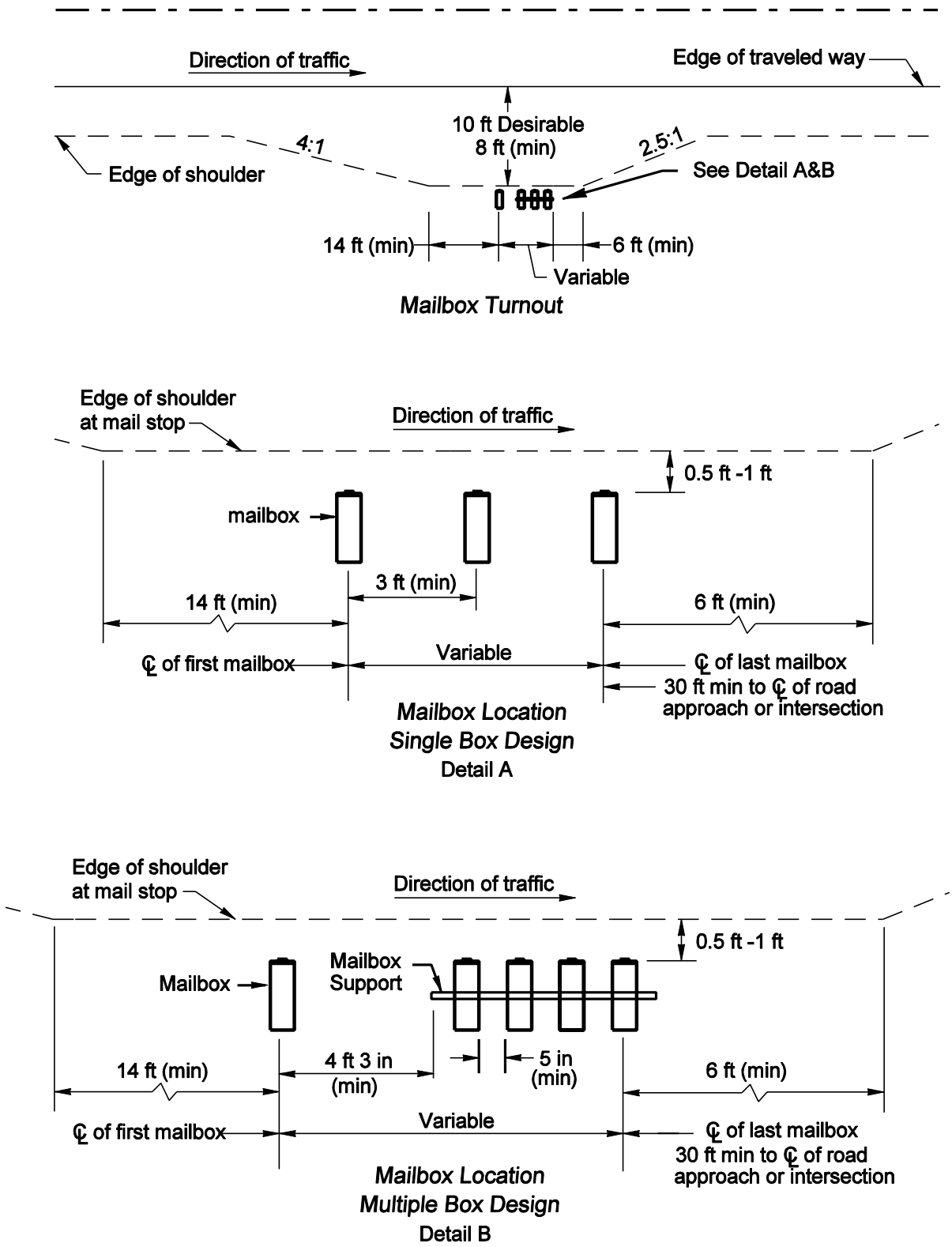

Mailbox Location and Turnout Design
Figure 700-6

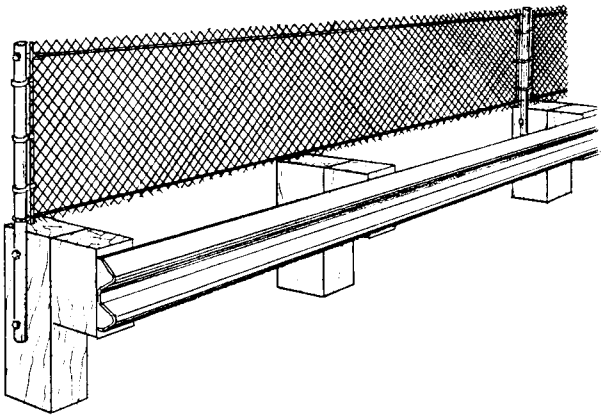

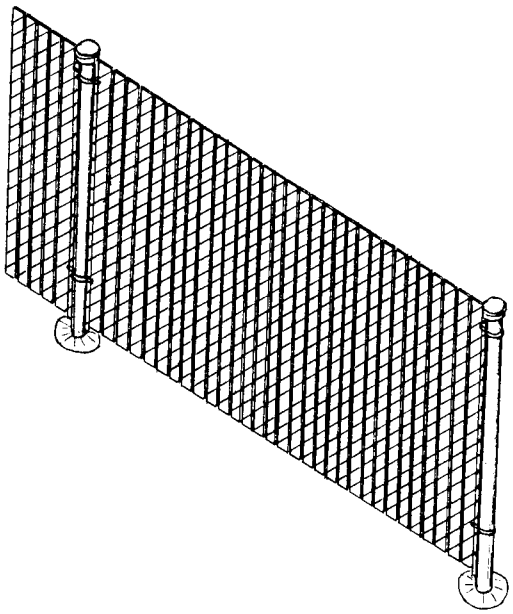

Chain Link

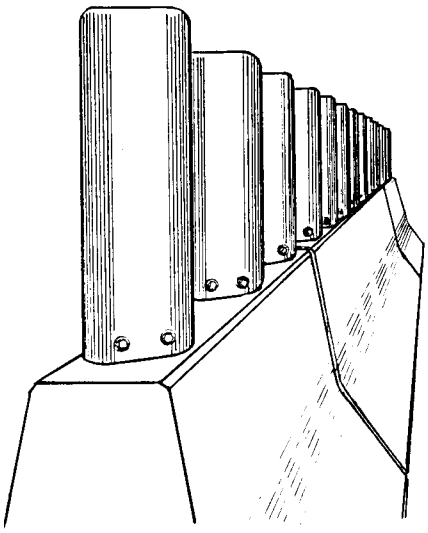

Vertical Blades

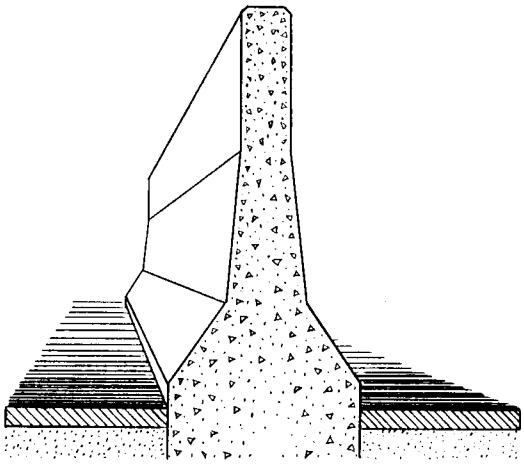

Concerete Barrier

Glare Screens
Figure 700-7