TABLE 1:

POLE					BASE PLATE				ANCHOR BOLT				SIGNAL ARM TUBE										SIGNAL ARM ATTACHMENT DATA						XYZ (FT.^{3})
													BASE SECTION					TIP SECTION											
Pole Class	Base O.D.	Tip O.D.	Length	Ga. or Thk.	Square "S"	Bolt Circle "Y"	Thk. "M"	Hole "Z"	Dia. "K"	Length "J"	Anchor PL. O.D.	Thread Length "U"	Base Dia.	Tip Dia.	Thk.	Length	Splice	Base Dia.	Tip Dia.	Thk.	Length	Span (ft.)	"A"	"B"	"C"	"D"	"E"	"F"	
II	14"	11"	21'-6"	1/4"	19"	18"	1 1/2"	1 3/4"	1 1/2"	60"	22"	18" △2	8 5/8"	5 1/8"	3/16"	0-25						0-25	20"	20"	16"	16"	1 3/4"	1 1/2"-6UNC x 6	566
II	14"	11"	21'-6"	1/4"	19"	18"	1 1/2"	1 3/4"	1 1/2"	60"	22"	18"	10"	5 1/8"	3/16"	35						26-35	20"	20"	16"	16"	1 3/4"	1 1/2"-6UNC x 6	1105
II	14"	11"	21'-6"	1/4"	19"	18"	1 1/2"	1 3/4"	1 1/2"	60"	22"	18"	11 7/16"	5 1/8"	3/16"	45						36-45	20"	20"	16"	16"	1 3/4"	1 1/2"-6UNC x 6	1531
II	17"	14"	21'-6"	5/16"	23"	22"	2"	2 1/4"	2"	60"	26"	18"	13"	10 1/4"	1/4"	20	2'-0"	10 7/8"	5 3/4"	3/16"	37	46-55	24"	24"	20"	20"	2"	1 1/2"-6UNC x 6 1/2	1957
II	17"	14"	21'-6"	5/16"	23"	22"	2"	2 1/4"	2"	60"	26"	18"	14"	11 1/4"	5/16"	20	2'-0"	11 7/8"	6"	3/16"	42	56-60	24"	24"	20"	20"	2"	1 1/2"-6UNC x 6 1/2	2894
II	17"	14"	21'-6"	5/16"	23"	22"	2"	2 1/4"	2"	60"	26"	18"	14 3/4"	10 1/2"	5/16"	30	2'-0"	11 1/4"	6 1/16"	3/16"	37	61-65	24"	24"	20"	20"	2"	1 1/2"-6UNC x 6 1/2	2894
III	14"	10 15/16"	22'-0"	1/4"	19"	18"	1 1/2"	1 3/4"	1 1/2"	60"	22"	18"	8 5/8"	5 1/8"	3/16"	0-25						0-25	20"	20"	16"	16"	1 3/4"	1 1/2"-6UNC x 6	623
III	14"	10 15/16"	22'-0"	1/4"	19"	18"	1 1/2"	1 3/4"	1 1/2"	60"	22"	18"	10"	5 1/8"	3/16"	35						26-35	20"	20"	16"	16"	1 3/4"	1 1/2"-6UNC x 6	1161
III	14"	10 15/16"	22'-0"	1/4"	19"	18"	1 1/2"	1 3/4"	1 1/2"	60"	22"	18"	11 7/16"	5 1/8"	3/16"	45						36-45	20"	20"	16"	16"	1 3/4"	1 1/2"-6UNC x 6	1587
III	17"	13 15/16"	22'-0"	5/16"	23"	22"	2"	2 1/4"	2"	60"	26"	18"	13"	10 1/4"	1/4"	20	2'-0"	10 7/8"	5 3/4"	3/16"	37	46-55	24"	24"	20"	20"	2"	1 1/2"-6UNC x 6 1/2	2600
III	17"	13 15/16"	22'-0"	5/16"	23"	22"	2"	2 1/4"	2"	60"	26"	18"	14"	11 1/4"	5/16"	20	2'-0"	11 7/8"	6"	3/16"	42	56-60	24"	24"	20"	20"	2"	1 1/2"-6UNC x 6 1/2	2947
III	17"	13 15/16"	22'-0"	5/16"	23"	22"	2"	2 1/4"	2"	60"	26"	18"	14 3/4"	10 1/2" △1	5/16"	30	2'-0"	11 1/4"	6 1/16"	3/16"	37	61-65	24"	24"	20"	20"	2"	1 1/2"-6UNC x 6 1/2	2947

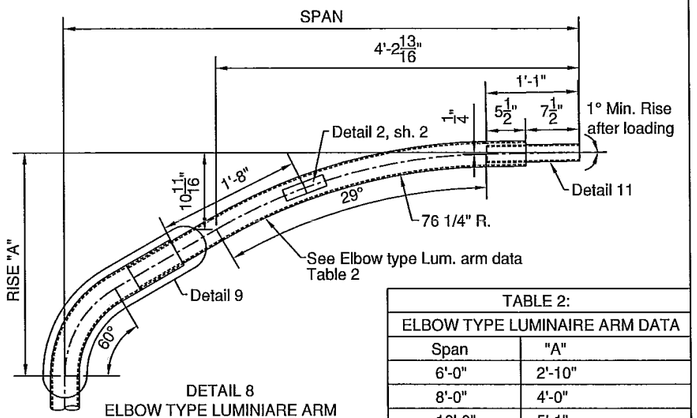

DETAIL 8
ELBOW TYPE LUMINIARE ARM

TABLE 2: ELBOW TYPE LUMINAIRE ARM DATA	
Span	"A"
6'-0"	2'-10"
8'-0"	4'-0"
10'-0"	5'-1"
12'-0"	6'-5"
14'-0"	7'-7"
◇14'-0"	5'-1"
16'-0"	8'-9"
◇16'-0"	6'-4"

◇For 30'-0" Mounting Height

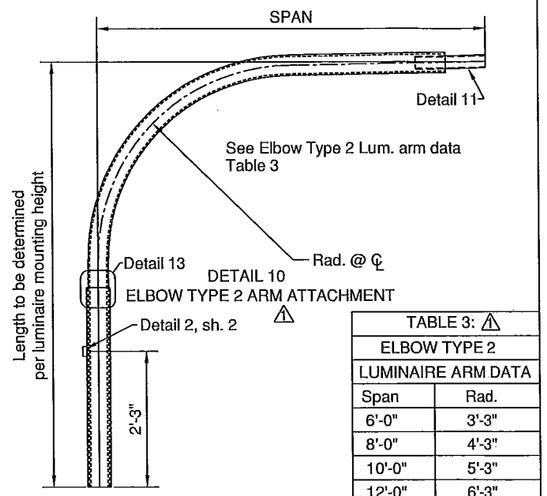

TABLE 3: △1 ELBOW TYPE 2 LUMINAIRE ARM DATA	
Span	Rad.
6'-0"	3'-3"
8'-0"	4'-3"
10'-0"	5'-3"
12'-0"	6'-3"
14'-0"	7'-3"
16'-0"	8'-3"

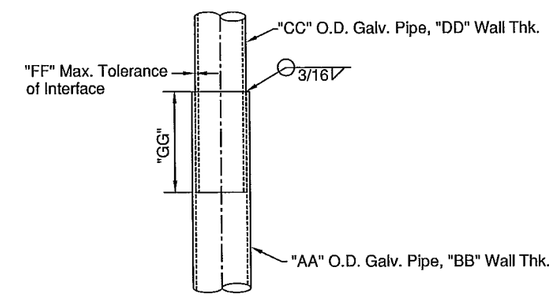

Arm Lengths	"AA"	"BB"	"CC"	"DD"	"FF"	"GG"
6'-0" Thru 10'-0"	4.0"	0.226"	3.5"	0.216"	0.024"	7"
12'-0" Thru 16'-0"	4.5"	0.237"	4.0"	0.226"	0.013"	9"

DETAIL 13 △1
ELBOW TYPE 2 ARM ATTACHMENT

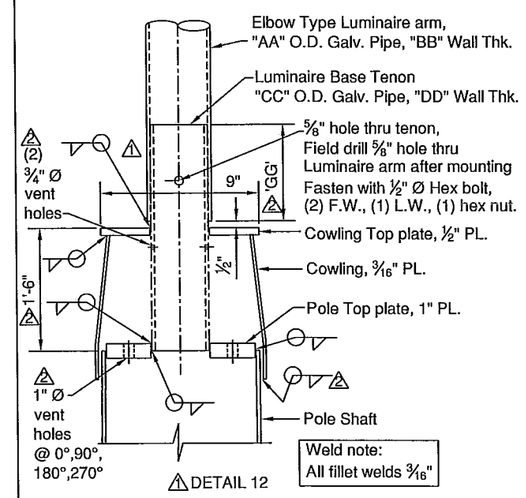

ELBOW TYPE LUMINAIRE ARM BASE

Arm Lengths	"AA"	"BB"	"CC"	"DD"	"GG"
6'-0" Thru 10'-0"	4.0"	0.226"	3.5"	0.216"	7"
12'-0" Thru 16'-0"	4.5"	0.237"	4.0"	0.226"	9"

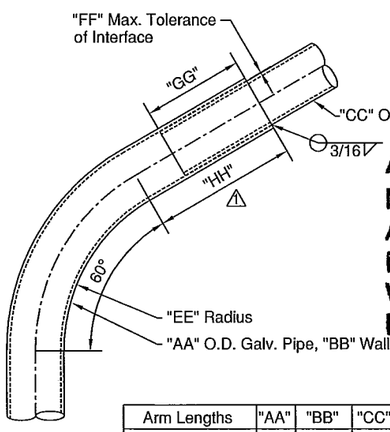

Arm Lengths	"AA"	"BB"	"CC"	"DD"	"EE"	"FF"	"GG"	"HH"
6'-0" Thru 10'-0"	4.0"	0.226"	3.5"	0.216"	1'-0"	0.024"	7"	10"
12'-0" Thru 16'-0"	4.5"	0.237"	4.0"	0.226"	1'-3"	0.013"	9"	19"

DETAIL 9 △1
ELBOW TYPE ARM ATTACHMENT

APPROVED
Manufacturer's Pole Plan
Approved For Listing As A
Pre-Approved Drawing
WSDOT Bridge & Structures Office
By GB Date 5-28-09

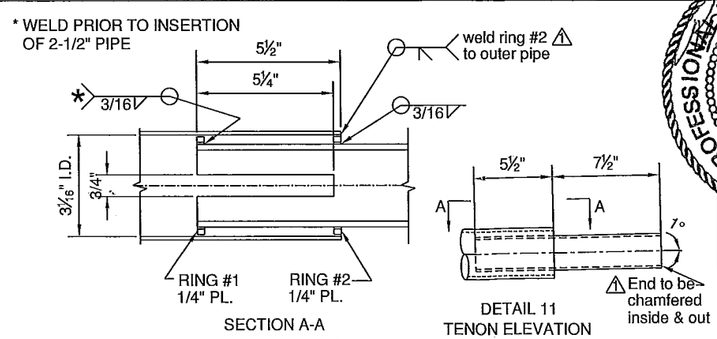

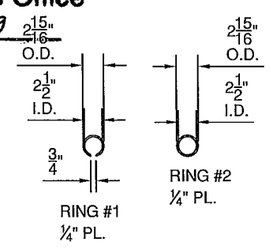

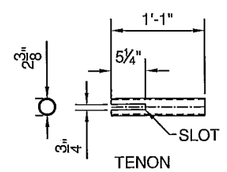

TENON
2" SCH. 40 PIPE

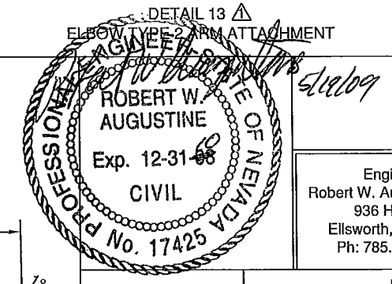

Engineer:
Robert W. Augustine, P.E.
936 Hwy. 14
Ellsworth, KS 67439
Ph: 785.472.5390

Maico Industries, Inc.
936 Highway 14
Ellsworth, KS 67439
Tel: 785-472-5390 Fax: 785-472-3729

JOB NAME & NUMBER: WSDOT MAST ARMS

DESCRIPTION : Washington State D.O.T. Standard Mast Arms

DRAWN : DS | DATE : 02/26/08
CHECKED : | SCALE : NTS

Rev.	Date	Descriptions	Approved
△1	03/14/08	changes per WSDOT	
△2	03/26/08	changes per WSDOT	
△3	05/15/08	changes per WSDOT	

DRAWING NUMBER : WSDOTMA SH. 3 OF 3

REV: 3