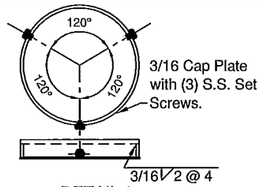

DETAIL 1
POLE, ARM CAP PLATE DETAIL

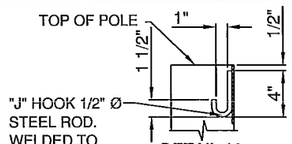

DETAIL 16
J-HOOK WIRE SUPPORT

DETAIL 2
IDENTIFICATION TAG DETAIL

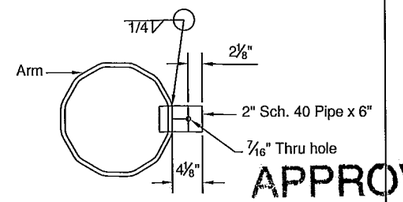

DETAIL 3
SIGNAL ARM TENON DETAIL

APPROVED
Manufacturer's Pole Plan
Approved For Listing As A
Pre-Approved Drawing
WSDOT Bridge & Structures Office
By GB Date 5-28-09

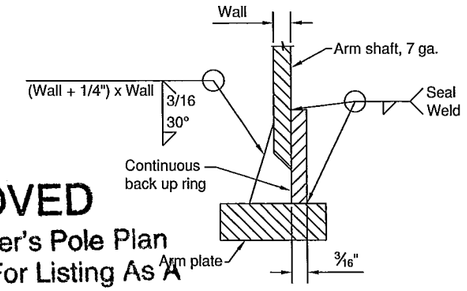

ARM PLATE WELD DETAIL

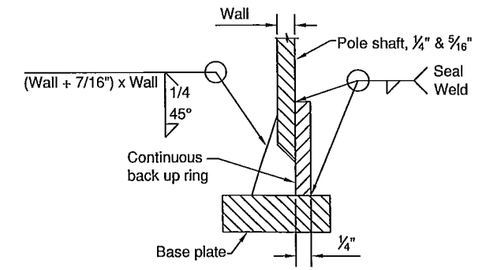

POLE BASEPLATE WELD DETAIL

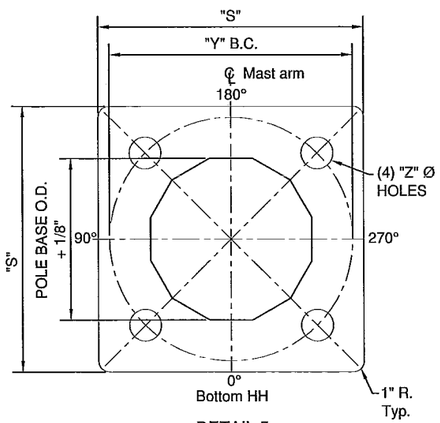

DETAIL 5
BASEPLATE DETAIL

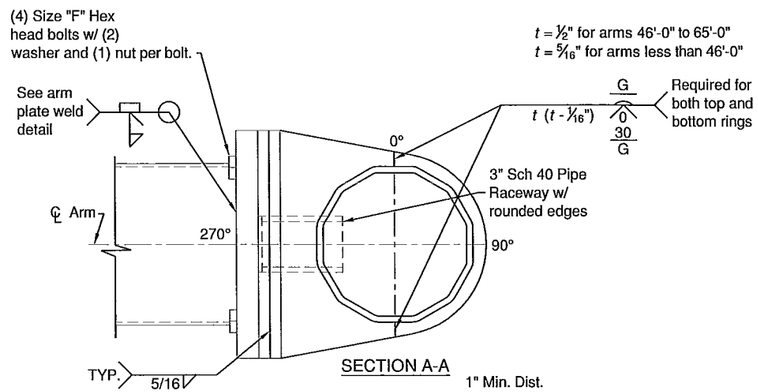

SECTION A-A

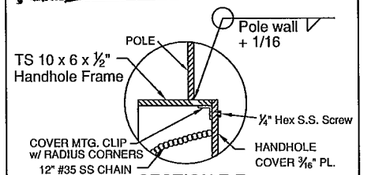

SECTION E-E

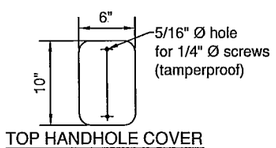

TOP HANDHOLE COVER
3/16" thick

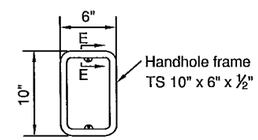

DETAIL 14
TOP HANDHOLE FRAME DETAIL
(locate 180° opposite mast arm)

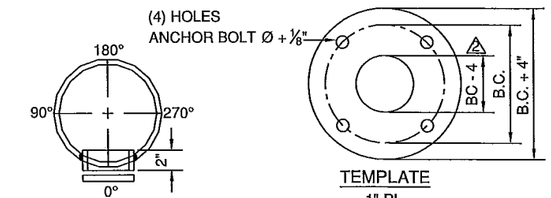

SECTION C-C

TEMPLATE
1" PL.

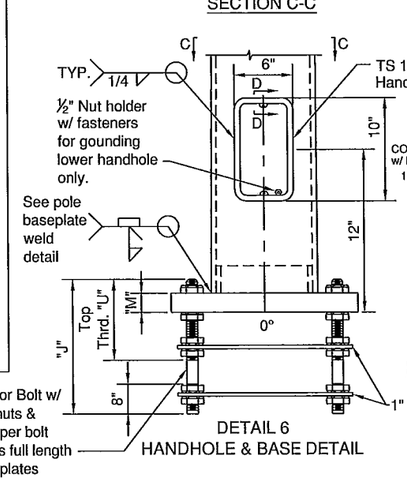

DETAIL 6
HANDHOLE & BASE DETAIL

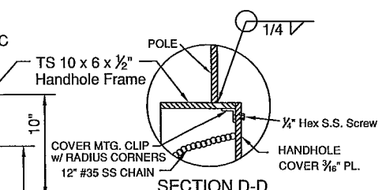

SECTION D-D

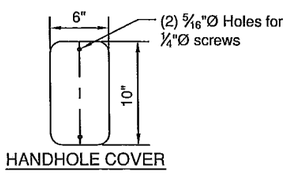

HANDHOLE COVER

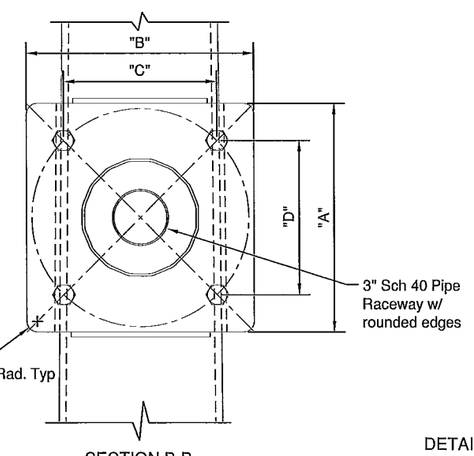

SECTION B-B

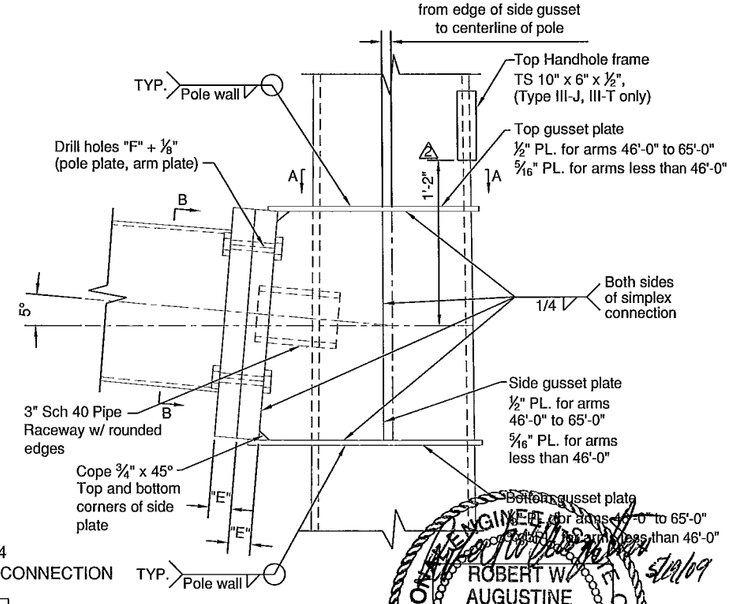

DETAIL 4
SIGNAL ARM BOXED CONNECTION

DETAIL 15
TYPICAL SEAM WELD

SEAM WELDS 60% MIN. PENETRATION. LONGITUDINAL SEAM WELDS MUST BE WELDED FLUSH OR GROUND SMOOTH (+ 1/8"). LONGITUDINAL SEAM WELDS WITHIN 6" OF CIRCUMFERENTIAL WELDS SHALL BE COMPLETE PENETRATION WELDS.

For variables shown, see table 1, sh. 3

PROFESSIONAL ENGINEER ROBERT W. AUGUSTINE ID Exp. 12-31-08 CIVIL No. 17425 STATE OF IDAHO
5/28/09

Engineer:
Robert W. Augustine, P.E.
936 Hwy. 14
Ellsworth, KS 67439
Ph: 785.472.5390

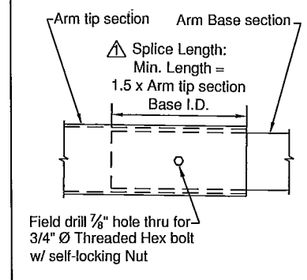

DETAIL 7
TELESCOPIC FIELD JOINT
(61'-65' ARMS ONLY)

Maico Industries, Inc.
936 Highway 14
Ellsworth, KS 67439
Tel: 785-472-5390 Fax: 785-472-3729

JOB NAME & NUMBER: WSDOT MAST ARMS

DESCRIPTION : Washington State D.O.T. Standard Mast Arms

DRAWN : DS | DATE : 02/26/08
CHECKED : | SCALE : NTS

Rev.	Date	Descriptions	Approved
1	03/14/08	changes per WSDOT	
2	03/26/08	changes per WSDOT	
3	05/15/08	changes per WSDOT	

DRAWING NUMBER : WSDOTMA SH 2 OF 3

REV: 3