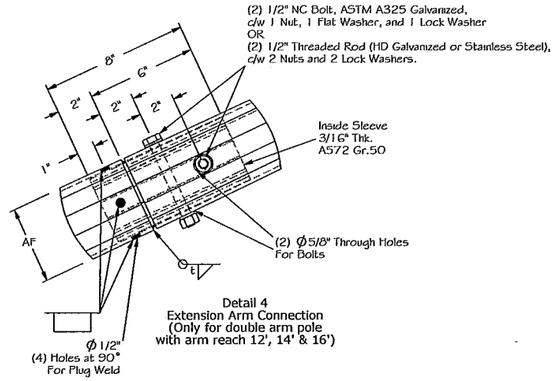


Detail 4
Extension Arm Connection
(Only for double arm pole with arm reach 12', 14' & 16')

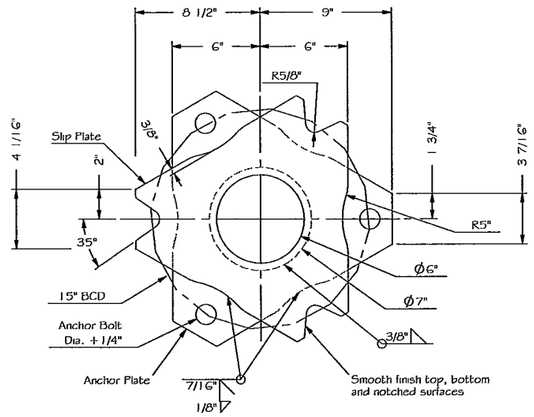


Detail 6
Slip Base Assembly
(If required)

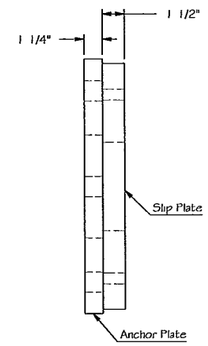


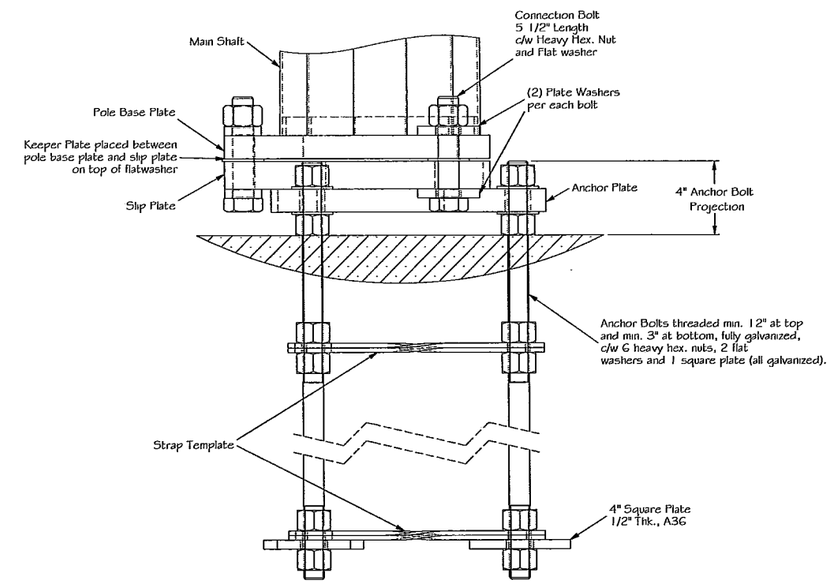


Slip Base & Anchor Bolt Cage Detail

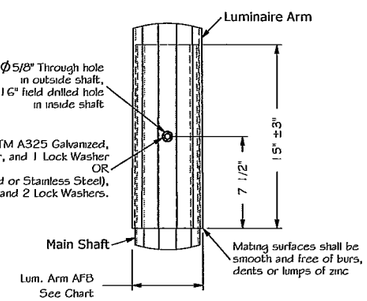


Detail 2
Slip Joint

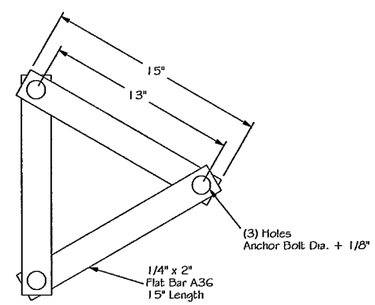


Strap Template Detail

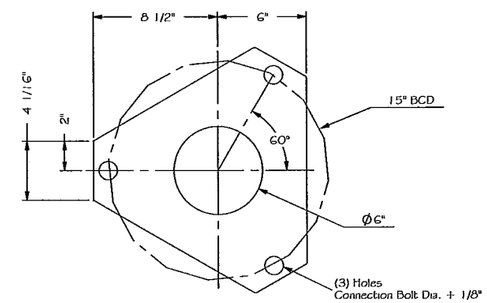


Keeper Plate Detail
28GA

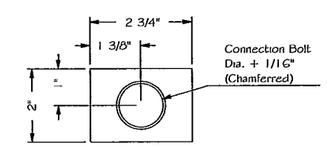


Plate Washer Detail
1/2" Thk. A36

APPROVED
Manufacturer's Pole Plan
Approved For Listing As A
Pre-Approved Drawing
WSDOT Bridge & Structures Office
By GB Date 3/5/08

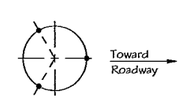


Anchor Bolt Layout
Slip Base

DESIGNED: TED BROCKMAN
DRAWN: LUISS BARCAN
APPROVED: TED BROCKMAN
DATE: 01-Apr-2004

PROFESSIONAL ENGINEER — PROVINCE OF BRITISH COLUMBIA — T. A. BROCKMAN
Dec.14, 2007


West Coast Engineering Group Inc.
6823 NORTHGATE WAY
FERNDALE, WA, USA, 98248-8309
Ph.(360) 366-3400, Fx.(360) 366-3401
www.wceng.com


| | |
|---|---|
| PROJECT: LIGHTING POLE, Type J, STATE OF WASHINGTON | SCALE: NTS |
| | QTY: - |
| JOB #: - | SHEET 2 OF 2 |
| DWG. #: WSDOT-LP-01 | REV. 4 |


THE INFORMATION CONTAINED IN THIS DRAWING IS THE PROPERTY OF WEST COAST ENGINEERING GROUP, AND ANY INFORMATION OBTAINED FROM ITS CONTENT SHALL BE USED ONLY FOR THE SPECIFIC PURPOSE AUTHORIZED BY WEST COAST ENGINEERING GROUP.