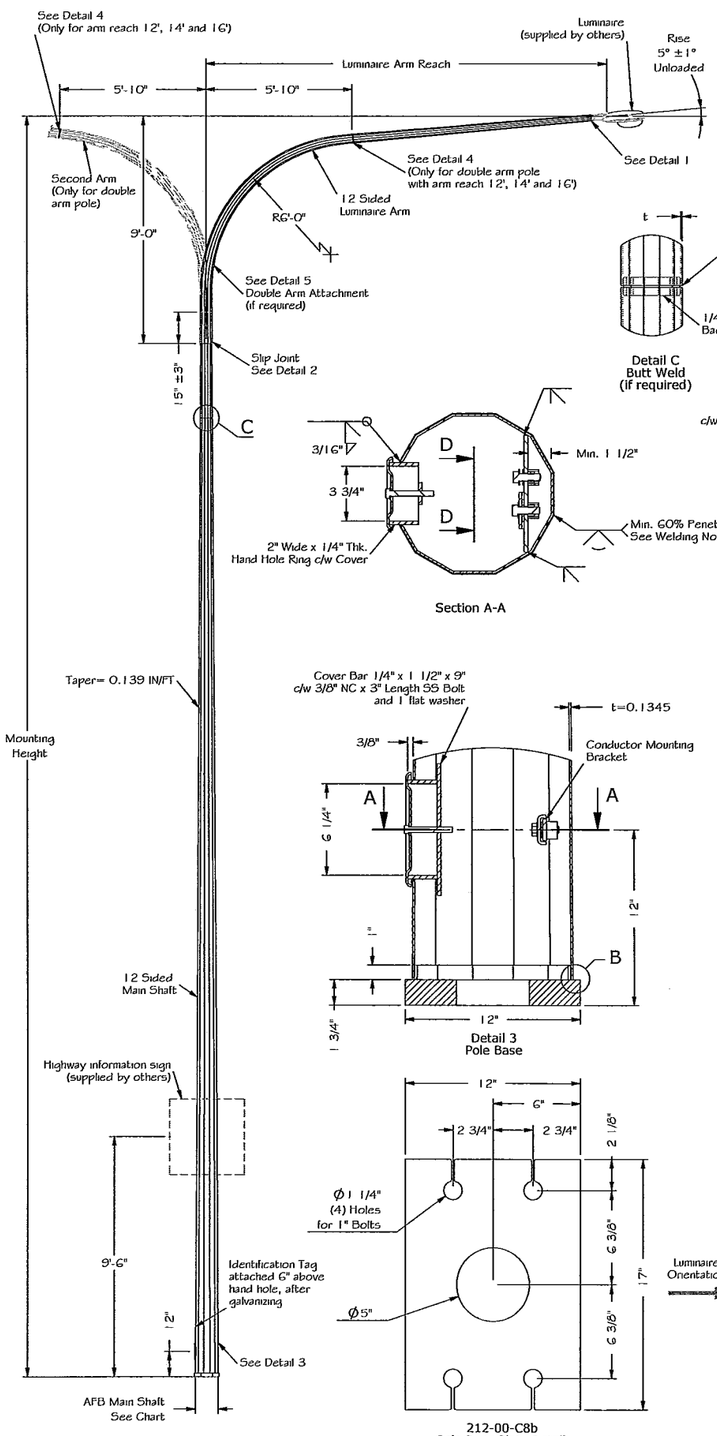

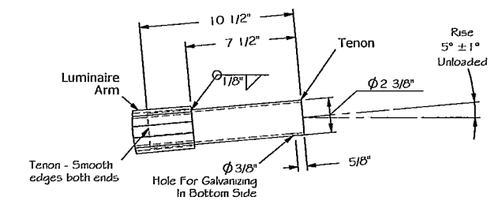

Detail 1
Luminaire Tenon

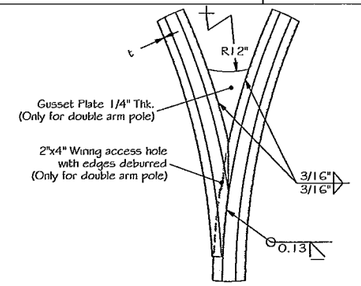

Detail 5
Double Arm Attachment
(Only for double arm pole)

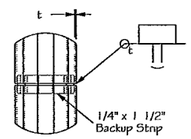

Detail C
Butt Weld
(if required)

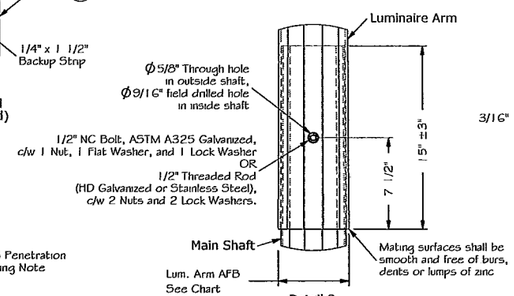

Detail 2
Slip Joint

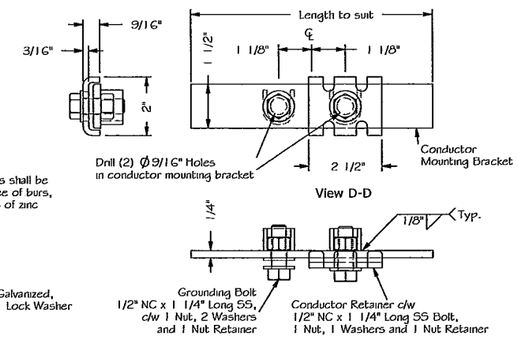

Detail 3
Pole Base

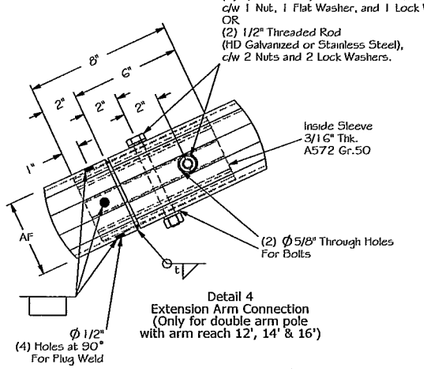

Detail 4
Extension Arm Connection
(Only for double arm pole
with arm reach 12', 14' & 16')

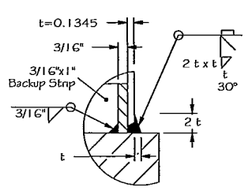

Detail B

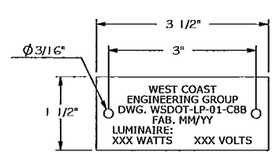

Identification Tag Detail

Notes:
-Material: 18GA Aluminum or SS
-Secure to pole with (2) 0.125" rivets
-Tag stamped or etched as shown

212-00-C8b
Pole Base Plate Detail

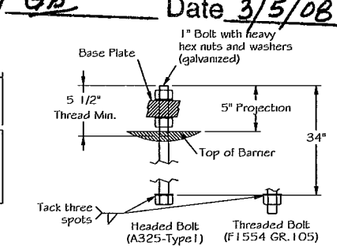

Anchor Bolt Detail
(Anchor bolts supplied only if required)

MAIN SHAFT							
Mounting Height x Lum. Arm	Main Shaft AFB * (IN)	Main Shaft AFT * (IN)	Main Shaft Length (IN)	THK ***	Anchor Bolt Dia.	Anchor Bolt Length	
25'x 6'	6.24	3.85	206	0.1345"	1"	2'-10"	
25'x 8'	6.47	4.08	206	0.1345"	1"	2'-10"	
25'x10'	6.73	4.34	206	0.1345"	1"	2'-10"	
25'x12'	7.00	4.61	206	0.1345"	1"	2'-10"	
25'x14'	7.26	4.87	206	0.1345"	1"	2'-10"	
25'x16'	7.51	5.12	206	0.1345"	1"	2'-10"	
30'x 6'	6.94	3.85	266	0.1345"	1"	2'-10"	
30'x 8'	7.17	4.08	266	0.1345"	1"	2'-10"	
30'x10'	7.42	4.34	266	0.1345"	1"	2'-10"	
30'x12'	7.70	4.61	266	0.1345"	1"	2'-10"	
30'x14'	7.95	4.87	266	0.1345"	1"	2'-10"	
30'x16'	8.21	5.12	266	0.1345"	1"	2'-10"	
35'x 6'	7.63	3.85	326	0.1345"	1"	2'-10"	
35'x 8'	7.87	4.08	326	0.1345"	1"	2'-10"	
35'x10'	8.12	4.34	326	0.1345"	1"	2'-10"	
35'x12'	8.40	4.61	326	0.1345"	1"	2'-10"	
35'x14'	8.65	4.87	326	0.1345"	1"	2'-10"	
35'x16'	8.91	5.12	326	0.1345"	1"	2'-10"	
40'x 6'	8.33	3.85	386	0.1345"	1"	2'-10"	
40'x 8'	8.56	4.08	386	0.1345"	1"	2'-10"	
40'x10'	8.82	4.34	386	0.1345"	1"	2'-10"	
40'x12'	9.09	4.61	386	0.1345"	1"	2'-10"	
** 40'x14'	9.35	4.87	386	0.1345"	1"	2'-10"	
** 40'x16'	9.60	5.12	386	0.1345"	1"	2'-10"	
45'x 6'	9.03	3.85	446	0.1345"	1"	2'-10"	
45'x 8'	9.26	4.08	446	0.1345"	1"	2'-10"	
45'x10'	9.52	4.34	446	0.1345"	1"	2'-10"	
45'x12'	9.79	4.61	446	0.1345"	1"	2'-10"	
** 45'x14'	10.05	4.87	446	0.1345"	1"	2'-10"	
** 45'x16'	10.30	5.12	446	0.1345"	1"	2'-10"	
50'x 6'	9.72	3.85	506	0.1345"	1"	2'-10"	
50'x 8'	9.96	4.08	506	0.1345"	1"	2'-10"	
50'x10'	10.21	4.34	506	0.1345"	1"	2'-10"	
50'x12'	10.49	4.61	506	0.1345"	1"	2'-10"	
** 50'x14'	10.74	4.87	506	0.1345"	1"	2'-10"	
** 50'x16'	11.00	5.12	506	0.1345"	1"	2'-10"	

** DOUBLE DAVIT NOT ALLOWED.

LOADING INFORMATION

DESIGN CRITERIA:
Design Standard: 2001 AASHTO Standard Specifications For Structural Supports For Highway Signs, Luminaires And Traffic Signals.
- Design wind speed - 90 mph (3 second gust wind speed)
- Design life / recurrence interval - 50 years
- Maximum 2 luminaires per pole
- Luminaire data: Area=3.3 ft^2, Weight=60 Lbs
- Highway information sign (max. area=10 ft^2) mounted @ 9'-6" from base.
- 40' to 50' poles shall be used with 12' max. length double luminaire arms.

CAFL AT CRITICAL
-Pole to base plate connection = E
-Slip Joint = B
-Pole shaft = B '

NOTES

WELDING:
Welding of structures shall be in accordance with the latest edition of the AWS Structural Welding Code D1.1-Steel
Longitudinal seam weld is 60% minimum penetration except for 6 inches from end of section at base plate, slip joint, butt joint and extension arm connection (double arm) it is 100% penetration.
FINISH: All components to be hot dip galvanized as per ASTM A123 / A153.
All tapered tubes are 12 sided
* AFB - across the flats at the base of the shaft, AFT - across the flats at the top of the shaft.
** Double davit not allowed.
*** 0.1345" Nominal thickness, 0.1265" minimum thickness.
Anchor bolts shall have 5" projection from the top of the barrier and a minimum 5 1/2" top thread.

LUMINAIRE ARM TYPE "J"				
Luminaire Arm Reach	AFB * (IN)	AFT * (IN)	THK *** (IN)	Shaft Length (FT)
6'	4.41	2 3/4"	0.1345"	11.94
8'	4.65	2 3/4"	0.1345"	13.61
10'	4.90	2 3/4"	0.1345"	15.45
12'	5.28	2 7/8"	3/16"	17.28
14'	5.54	2 7/8"	3/16"	19.11
16'	5.80	2 7/8"	3/16"	20.95

MATERIAL DATA	
COMPONENT	GRADE
Tubes with thk. = 0.1345"	A1011 GR.50
All other tubes	A572 GR.50
Base Plate	A572 GR.50
Slip Base Plates	A572 GR.50
Keeper Plate	A446 GR.A
Pipes	A53 GR.B
Anchor Bolts	F1554 GR.105
Connection Bolts	A325 - Type1
Nuts	A563-DH
Washers	ASTM F436
Handhole Ring & Cover	ASTM A36

APPROVED
Manufacturer's Pole Plan
Approved For Listing As A
Pre-Approved Drawing
WSDOT Bridge & Structures Office
By GB Date 3/5/08

REV.	DESCRIPTION	DATE	BY	APPRD
2	Modified the design criteria, and the materials for anchor bolts & shafts with 0.1345" Thk.	12/6/2007	LB	TB
1	Added the note with the minimum thickness for the nominal 0.1345" thickness	11/22/2005	LB	TB

DESIGNED: TED BROCKMAN
DRAWN: LUISS BARCAN
APPROVED: TED BROCKMAN

PROFESSIONAL ENGINEER — PROVINCE OF BRITISH COLUMBIA — T. A. BROCKMAN

Dec.14, 2007

DATE: 12-Aug-2005

West Coast Engineering Group Inc.
6823 NORTHGATE WAY
FERNDALE, WA, USA, 98248-8309
Ph.(360) 366-3400, Fx.(360) 366-3401
www.wceng.com

PROJECT: LIGHTING POLE
Type J on C-8b Concrete Barrier
STATE OF WASHINGTON

SCALE: NTS
QTY: -
JOB #: -
SHEET 1 OF 1
DWG. #: WSDOT-LP-01-C8B
REV. 2

THE INFORMATION CONTAINED IN THIS DRAWING IS THE PROPERTY OF WEST COAST ENGINEERING GROUP, AND ANY INFORMATION OBTAINED FROM ITS CONTENT SHALL BE USED ONLY FOR THE SPECIFIC PURPOSE AUTHORIZED BY WEST COAST ENGINEERING GROUP.