#	QTY	PART NUMBER	Description	MATERIAL
1	1	219-BE-A1-03	Top Flange, 1 3/4" Thk, 15" BCD, 5 1/16" I.D., Tapped for 1" Bolts	ASTM A36
2	1	121-10-EL1-01	Elbow, 10" Sch. 40 Pipe, 10 3/4" O.D.	ASTM A234
3	1	219-BE-A2-01	Parapet Flange, 1 3/4" Thk.	ASTM A36
4	3	219-A1-00024	Cover Band, 3/16" x 3 1/2" Flat Bar, Length 17 3/16"	ASTM A36
5	3	154-FWN-G012	1" Flat Washer Narrow, Galv.	ASTM F436
6	3	151-HHG-1.000-15F	1"-8 Heavy Hex Head Bolt, Length 6 1/2", Fully Threaded	ASTM A325 Type1, Galv.
7	6	153-H2H-G008	1"-8 Heavy Hex Nut	ASTM A194 Gr.2H Galv.
8	6	267-04-00003	Plate Washer, 1/2"x2" Flat Bar, 2 3/4" Length	ASTM A36
9	6	151-FHMS-0.3125x0.75-A	Flat Head machine screw, 5/16"-18, Length 3/4"	F593
10	6	154-LWR-S010S	5/16" Spring Lock Washer, Stainless Steel	F593
11	1	255-BE-A0001	"Fabreeka" fabric pad, 3/16" Thk.	
12	1	211-00-04-011	Anchor Plate, 13" Sq., 10" BSQ., 1" Thk., Supplied only if required	ASTM A36

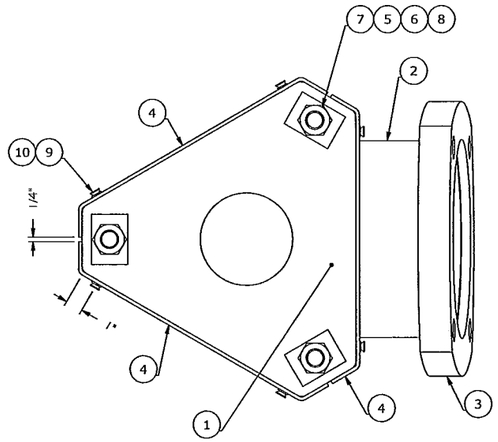

TOWARD ROADWAY

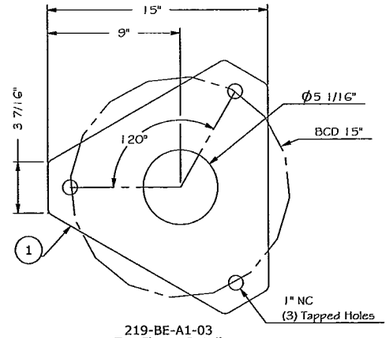

219-BE-A1-03
Top Flange Detail

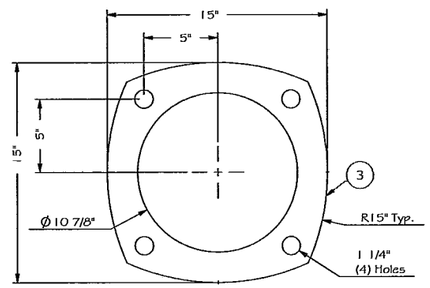

219-BE-A2-01
Parapet Flange Detail

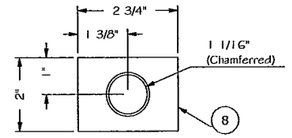

267-04-00003
Plate Washer Detail
1/2" Thk. A36

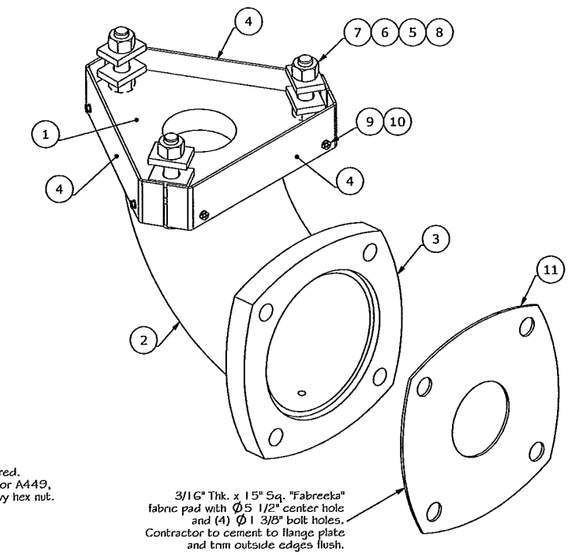

3/16" Thk. x 15" Sq. "Fabreeka" fabric pad with Ø5 1/2" center hole and (4) Ø1 3/8" bolt holes. Contractor to cement to flange plate and trim outside edges flush.

BRIDGE ELBOW DETAILS

Notes:
1. Anchor Plate and Anchor Bolts supplied only if required.
2. Use (4) 1" Dia. x 12" Length bolts, AASHTO M164 or A449, threaded full length, c/w hardened lock washer and heavy hex nut.

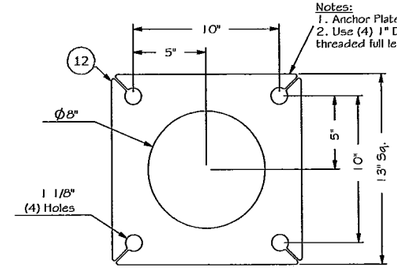

211-00-04-011
Anchor Plate Detail

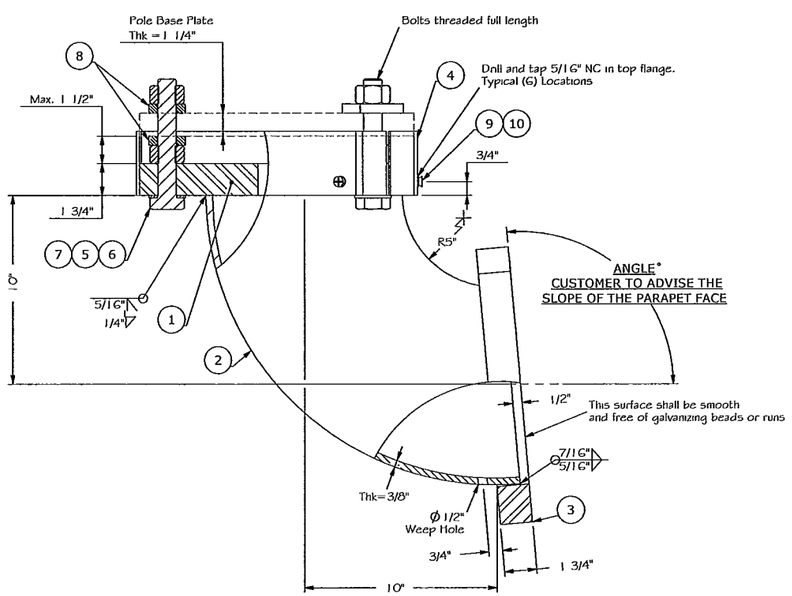

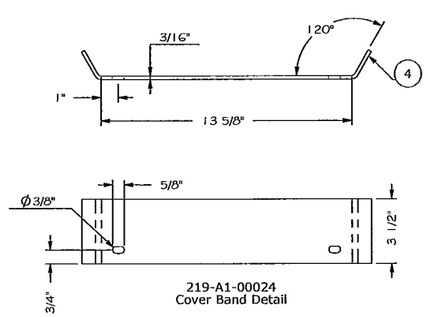

219-A1-00024
Cover Band Detail

APPROVED

Manufacturer's Pole Plan
Approved For Listing As A
Pre-Approved Drawing
WSDOT Bridge & Structures Office
By GB Date 3/5/08

DESIGNED:	TED BROCKMAN
DRAWN:	LUISS BARCAN
APPROVED:	TED BROCKMAN

PROFESSIONAL ENGINEER — PROVINCE OF BRITISH COLUMBIA — T. A. BROCKMAN

Dec.14, 2007

DATE: 18-Aug-2005

West Coast Engineering Group Inc.
6823 NORTHGATE WAY
FERNDALE, WA, USA, 98248-8309
Ph.(360) 366-3400, Fx.(360) 366-3401
www.wceng.com

PROJECT: LIGHTING POLE Type J on BRIDGE ELBOW STATE OF WASHINGTON	SCALE: NTS QTY: -
SW #: WSDOT-LP-01-BE	V #: -
DWG. #: WSDOT-LP-01-BE	SHEET 2 OF 2 REV. 3

THE INFORMATION CONTAINED IN THIS DRAWING IS THE PROPERTY OF WEST COAST ENGINEERING GROUP, AND ANY INFORMATION OBTAINED FROM ITS CONTENT SHALL BE USED ONLY FOR THE SPECIFIC PURPOSE AUTHORIZED BY WEST COAST ENGINEERING GROUP.