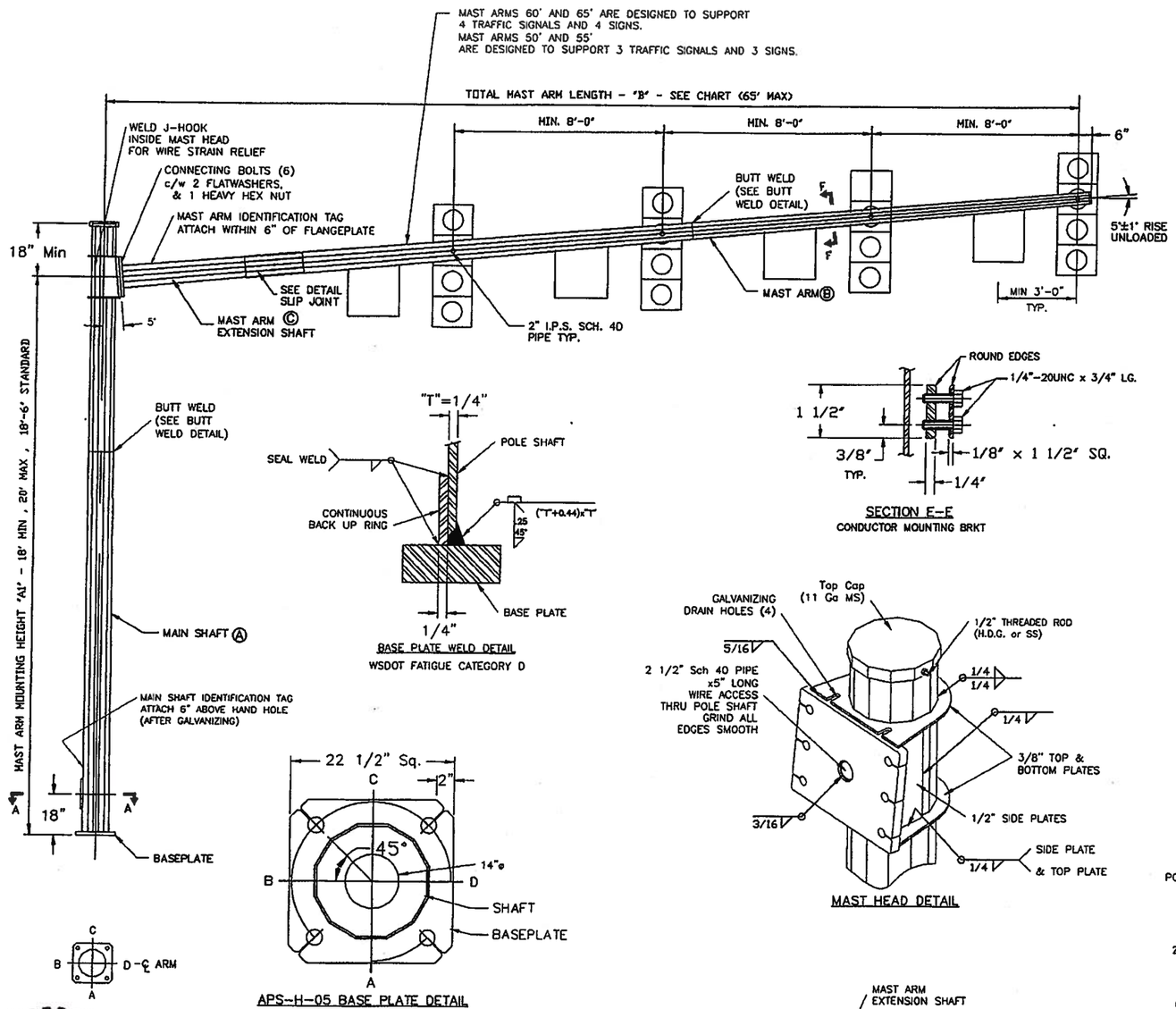

SECTION E-E
CONDUCTOR MOUNTING BRKT

MAST HEAD DETAIL

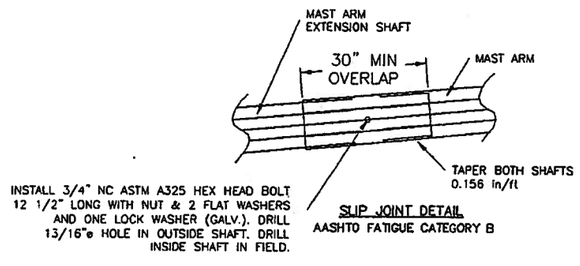

SLIP JOINT DETAIL
AASHTO FATIGUE CATEGORY B

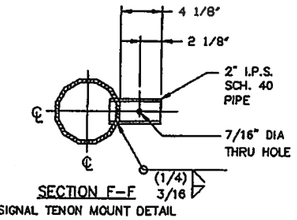

SECTION F-F
SIGNAL TENON MOUNT DETAIL

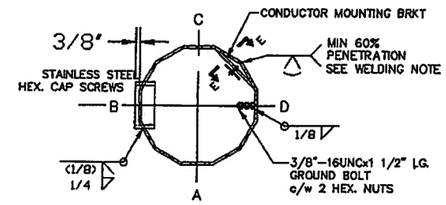

SEC A-A - HAND HOLE DETAIL
AASHTO FATIGUE CATEGORY E

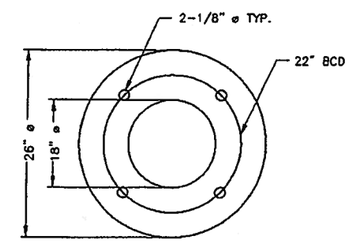

APS-H-09 ANCHOR PLATE DETAIL
(1" THK PLATE)

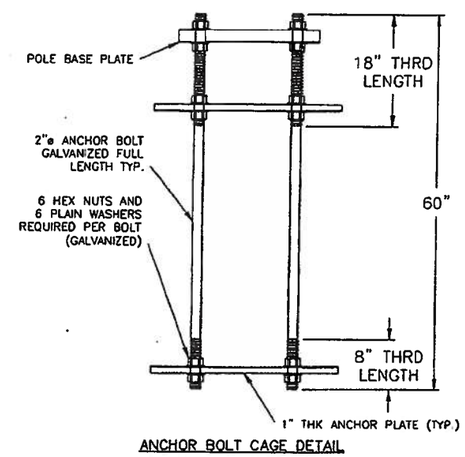

ANCHOR BOLT CAGE DETAIL

Ⓐ MAIN SHAFT (1)			
AFB (3)	AFT (4)	THK	LENGTH
16"	15"	1/4"	21' 6" MAX

Ⓑ MAST ARM SHAFT (1)			
AFB (3)	AFT (4)	THK	LENGTH
11 5/16"	5"	3/16"	40'

(1) DODECAGON SECTION (12 SIDED)
(2) X-SECTION AREA OF SIGNAL OR SIGN x DISTANCE FROM CENTERLINE OF SIGNAL OR SIGN TO CENTERLINE OF MAIN SHAFT
(3) AFB - "ACROSS THE FLATS" AT THE BASE OF THE SHAFT
(4) AFT - "ACROSS THE FLATS" AT THE TOP OF THE SHAFT

TOTAL MAST ARM LENGTH "B"	Ⓒ MAST ARM EXTENSION SHAFT (1)				CONNECTING BOLTS (6 SETS)		SIGN & SIGNAL MAX. (2) LOADING XYZ
	AFB(3)	AFT(4)	THK	LENGTH	DIA.	LENGTH	
50'	12 3/8"	10 1/4"	1/4"	12' 6"	1 1/2"	6"	1722.9
55'	13 3/16"	10 1/4"	1/4"	17' 6"	1 1/2"	6"	1935.9
60'	13 15/16"	10 1/4"	1/4"	22' 6"	1 1/2"	6"	2638.0
65'	14 3/4"	10 1/4"	1/4"	27' 6"	1 1/2"	6"	2922.0

DESIGN: ALL STANDARDS ARE DESIGNED TO THE 2009 AASHTO STANDARD SPECIFICATIONS FOR STRUCTURAL SUPPORTS FOR HIGHWAY SIGNS, LUMINAIRES AND TRAFFIC SIGNALS.
DESIGN WIND SPEED - 90 MPH (3 SECOND GUST WIND SPEED)
DESIGN LIFE / RECURRENCE INTERVAL - 50 YEARS
FATIGUE CATEGORY - III (GALLOPING, NATURAL & TRUCK GUSTS)
MAXIMUM TRUCK GUST WIND SPEED - 65 MPH
EACH STRUCTURE HAS A LOAD CAPACITY AS SHOWN IN THE ABOVE CHART. DESIGN AREAS OF SIGNS AS SIGNALS AS FOLLOWS:

TRAFFIC SIGNAL
FACE AREA = 9.2 FT.^{2}
WIND DRAG COEFFICIENT = 1.2
WEIGHT = 60 LB.
ICE AREA = 23 FT.^{2}

TRAFFIC SIGN
FACE AREA = 5.0 FT.^{2}
WIND DRAG COEFFICIENT = 1.12
WEIGHT = 60 LB.
ICE AREA = 5.0 FT.^{2}

WELDING: WELDING OF STRUCTURES SHALL BE IN ACCORDANCE WITH THE CURRENT AASHTO SPECIFICATIONS FOR STRUCTURAL SUPPORTS OF HIGHWAY SIGNS, LUMINAIRES & TRAFFIC SIGNALS.
LONGITUDINAL SEAM WELD IS 60% MINIMUM PENETRATION EXCEPT
- 6 INCHES FROM END OF SECTIONS IT IS 100% PENETRATION.
- ON THE FEMALE SECTION OF TELESCOPIC FIELD SPLICES IT IS 100% PENETRATION FOR MINIMUM SPLICE LENGTH PLUS 6 INCHES.

FINISH: ALL COMPONENTS TO BE HOT DIP GALVANIZED AS PER ASTM A123 / A153

MATERIAL DATA (UNLESS OTHERWISE NOTED)	
COMPONENT	GRADE
ALL TAPERED TUBES	ASTM A572 Gr. 50 OR A1011 GR.50
BASE PLATE	ASTM A36
FLANGE PLATES	ASTM A36
PIPE TENONS	ASTM A53 Gr. B
CONNECTING BOLTS	ASTM A325 - Type 1
NUTS	ASTM A563-DH
FLAT WASHERS	ASTM F436
ANCHOR PLATE	ASTM A36
ANCHOR BOLTS	ASTM F1554 GR.105

APPROVED
Manufacturer's Pole Plan
Approved For Listing As A
Pre-Approved Drawing
WSDOT Bridge & Structures Office
By GB Date 6-20-2011

THOMAS S. ADAM
STATE OF WASHINGTON
42082
REGISTERED PROFESSIONAL ENGINEER
6-10-11
EXPIRES 11-17-12

No. REV'D	V.E. No.	FILE No.	DATE	P.E. No.			CUSTOMER	LOCATION
8	ADDED BUTT WELD DETAIL			DCH		06-11	APS S.E.W. American Pole Structures L.L.C.	
7	UPDATES PER G. BCEI 04-13-10			CHK		05-10		
6	UPDATES PER G. BCEI 08-11-09			DRK		08-09		
5	UPDATES PER T. LACH 06-17-09			DRK		06-09	TITLE WSDOT TYPE II TRAFFIC STRUCTURE 65' MAX. MAST ARM LENGTH	
4	UPDATES PER T. LACH 06-05-08			DRK		06-08		
REV.No	CHANGE			BY	APP.	DATE		
DRAWN BY	S.B.		APP. BY				DWG. No. WS-T2-H	REV. No. 8	SHT. 1 of 2 SHTS.
DATE	10-AUG-02		SCALE	N.T.S.				