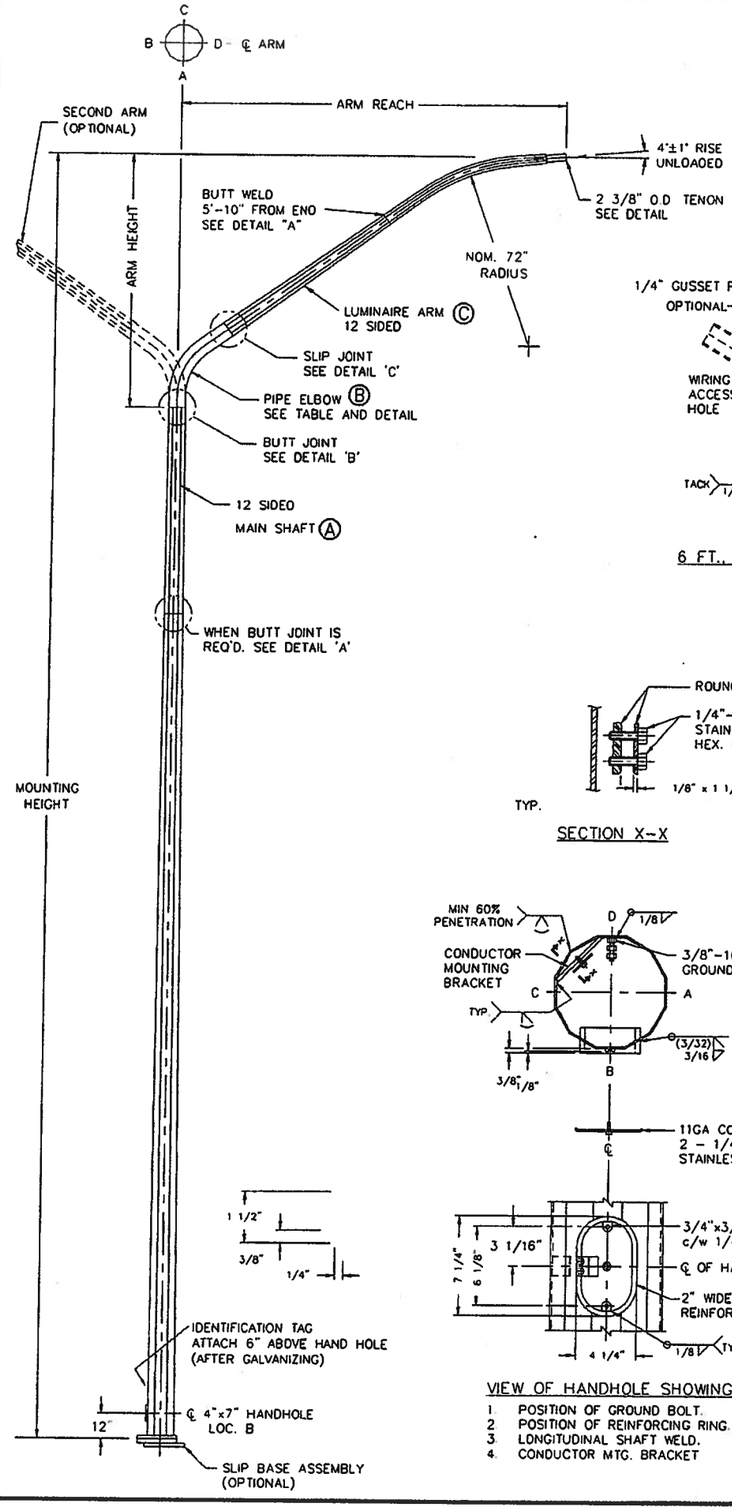

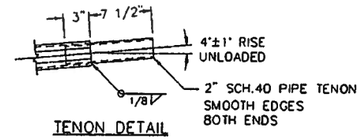

TENON DETAIL

LUM ARM REACH	Ⓑ LUMIN ARM ELBOW SCH 40 PIPE			Ⓒ LUMIN. ARM SHAFT 11GA (.1196") 12 SIDED SECTION		
	DIA.	RADIUS (1)	ARM HT. "H1"	AFB(3)	AFT(4)	SHAFT LENGTH
6'	4"	18"	2' 8"	3 7/8"	2 3/4"	3' 9"
8'	4"	18"	4' 0"	3 7/8"	2 3/4"	6' 1"
10'	4"	18"	5' 0"	3 7/8"	2 3/4"	8' 4"
12'	4 1/2"	24"	6' 5"	4 3/8"	2 3/4"	10' 4"
14'	4 1/2"	24"	7' 6"	4 3/8"	2 3/4"	12' 8"
16'	4 1/2"	24"	8' 9"	4 3/8"	2 3/4"	15' 0"

Ⓐ MAIN SHAFT (2) 12 SIDED SECTION		
MOUNTING HEIGHT	AFB(3)	THK.
25'	7 1/2"	10GA
30'	8"	10GA
35'	8 1/2"	10GA
40'	9 1/2"	10GA
45'	10 1/4"	7GA
50'	11"	7GA

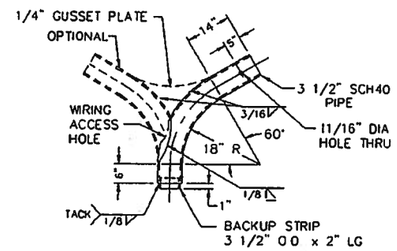

ELBOW DETAIL FOR
6 FT., 8 FT. & 10 FT. ARM REACH

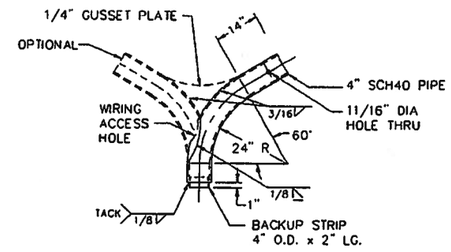

ELBOW DETAIL FOR
12 FT, 14 FT & 16 FT ARM REACH

	MOUNTING HEIGHT (FT.)	CONNECTING BOLT		ANCHOR BOLT			
						PLATE WASHER	
		DIA (IN.)	LENGTH (IN.)	DIA (IN.)	LENGTH (IN.)	SIZE (IN. SQ.)	THICKNESS (IN.)
SINGLE	25 TO 50	1	5-1/2	1	54	4	3/8
DOUBLE DAVIT	25 TO 45	1	5-1/2	1	54	4	3/8
DOUBLE DAVIT	46 TO 50	N/A	N/A	1 1/8	66	4	3/8

DESIGN: ALL STANDARDS ARE DESIGNED TO THE 2009 AASHTO STANDARD SPECIFICATIONS FOR STRUCTURAL SUPPORTS FOR HIGHWAY SIGNS, LUMINAIRES AND TRAFFIC SIGNALS.
DESIGN WIND SPEED - 90 MPH (3 SECOND GUST WIND SPEED)
DESIGN LIFE / RECURRENCE INTERVAL - 50 YEAR
EACH STRUCTURE CAN ACCOMODATE A MAXIMUM OF 2 LUMINAIRES
THE DESIGN AREA OF THE LUMINAIRES IS AS FOLLOWS:

LUMINAIRE DATA
FACE AREA = 3.3 FT.^{2}
WIND DRAG COEFFICIENT = 0.5
WEIGHT = 60 LB.
ICE AREA = 8.7 FT.^{2}

NOTES: INSTALLATION OF A 50' POLE WITH DOUBLE LUMINAIRE ARMS ON A SLIP BASE IS NOT ALLOWED. THE ALLOWABLE MAXIMUM SIGN AREA LOCATED 7'-0" ABOVE THE BASE WILL BE 20 SQ. FT. FOR ALL ARMS AND ALL MOUNTING HEIGHT.

WELDING: WELDING OF STRUCTURES SHALL BE IN ACCORDANCE WITH THE CURRENT AASHTO SPECIFICATIONS FOR STRUCTURAL SUPPORTS OF HIGHWAY SIGNS, LUMINAIRES & TRAFFIC SIGNALS.
LONGITUDINAL SEAM WELD IS 60% MINIMUM PENETRATION EXCEPT:
- 6 INCHES FROM END OF SECTIONS IT IS 100% PENETRATION.
- ON THE FEMALE SECTION OF TELESCOPIC FIELD SPLICES IT IS 100% PENETRATION FOR MINIMUM SPLICE LENGTH PLUS 6 INCHES

FINISH: ALL COMPONENTS TO BE HOT DIP GALVANIZED AS PER ASTM A123 / A153

MATERIAL DATA (UNLESS OTHERWISE NOTED)	
COMPONENT	GRADE
ALL TAPERED TUBES	ASTM A572 GR. 50 OR A1011 GR.50
BASE PLATE	ASTM A572 GR. 50
SLIP BASE PLATES	ASTM A36
PIPE TENONS & ELBOW	ASTM A53 GR. B SCH40
ANCHOR BOLTS	ASTM F1554 GR.105
SLIP FIT BOLT	ASTM A325 - Type 1
NUTS	ASTM A563-DH
FLAT WASHERS	ASTM F436

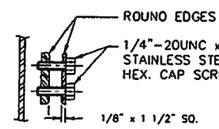

SECTION X-X

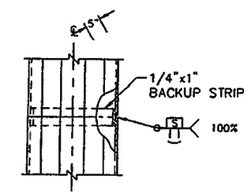

DETAIL 'A'
NO SPLICE IN BOTTOM THIRD OF POLE HEIGHT
100% PEN-WELDED & 100 PERCENT MAG. PARTICAL TESTED

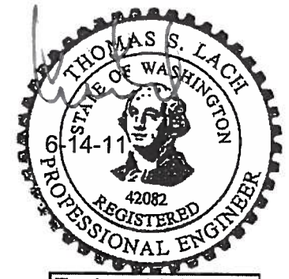

Expires 11-17-12

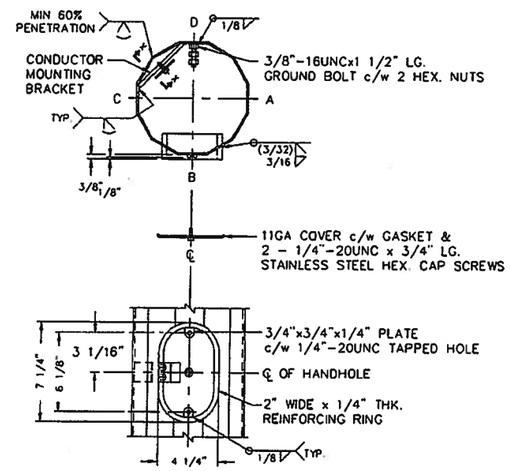

VIEW OF HANDHOLE SHOWING
1. POSITION OF GROUND BOLT.
2. POSITION OF REINFORCING RING.
3. LONGITUDINAL SHAFT WELD.
4. CONDUCTOR MTG. BRACKET

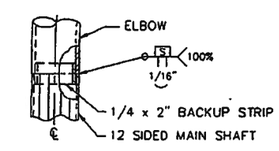

DETAIL 'B'

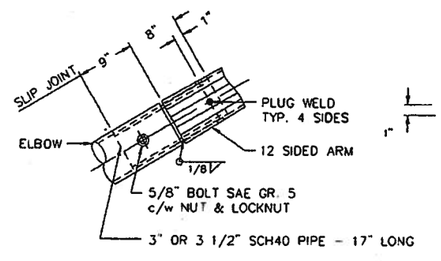

DETAIL 'C'

APPROVED
Manufacturer's Pole Plan
Approved For Listing As A
Pre-Approved Drawing
WSDOT Bridge & Structures Office
By GB Date 6-20-2011

REV. No	W.O. No.	FILE No.	DATE	P.O. No			CUSTOMER	LOCATION
7	UPDATED DRAWING AS PER G Bedi			ECH		JUN 14 2011		
6	ADDED WELD SEAM ON ARM			ECH		JUNE 9 2011		
5	ADDED NOTE ON SIGN SIZE			ECH		JUNE 2 2011		
4	UPDATED DRAWING AS PER Sam			BDA		FEB 28 2011		
REV. No	CHANGE			BY	APP.	DATE		

APS L.L.C.
American Pole Structures L.L.C.

TITLE: STATE OF WASHINGTON ELBOW TYPE ST. LIGHT POLES

DRAWN BY	L.B.	APP. BY	S.B.	DWG No.	REV No.	SHT 1 of 2 SHTS.
DATE	APRIL 10, 03	SCALE	N.T.S.	WS-SL-02	7	