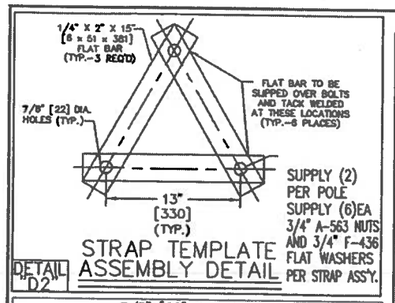

DETAIL "D2" STRAP TEMPLATE ASSEMBLY DETAIL

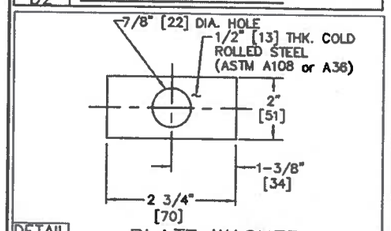

DETAIL "D" PLATE WASHER

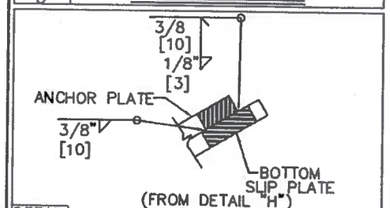

DETAIL "C" SECTION A-A

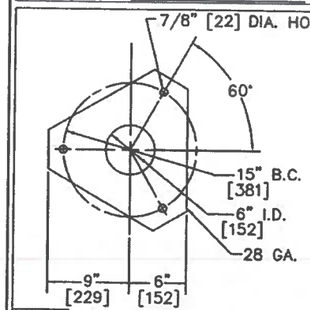

DETAIL "B" KEEPER PLATE

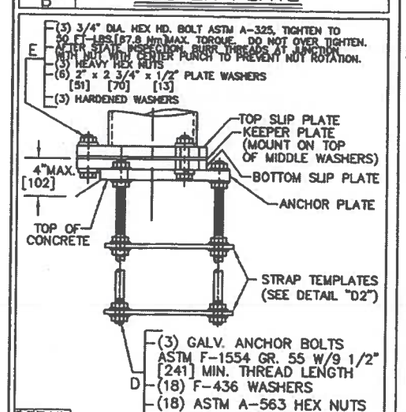

DETAIL "A" SLIP BASE ASSEMBLY

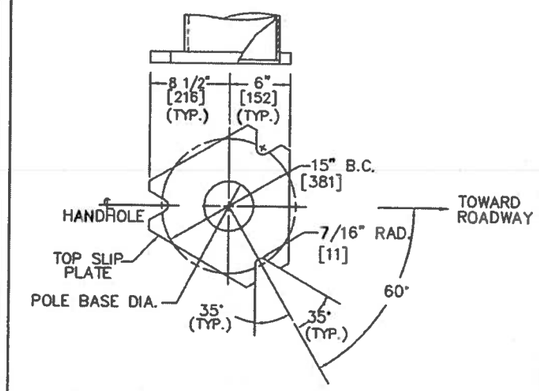

DETAIL "E" TOP SLIP PLATE

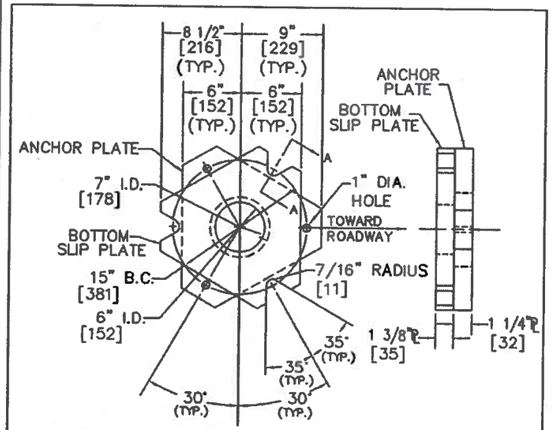

*BOTTOM SLIP PLATE AND ANCHOR PLATE TO BE ASTM A-572 GR. 50

DETAIL "H" *BOTTOM SLIP PLATE & ANCHOR PLATE

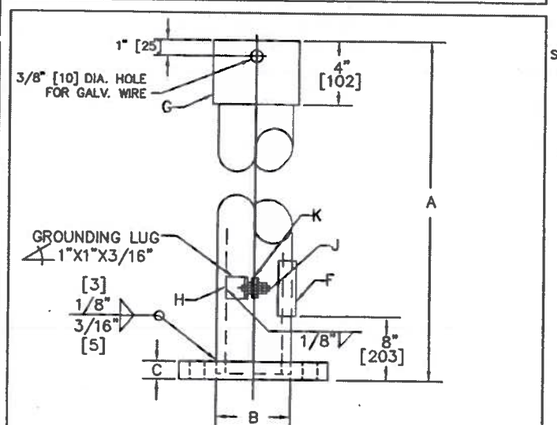

DETAIL "M" TYPE PS, RM, FB & TYPE 1 STANDARD DETAIL

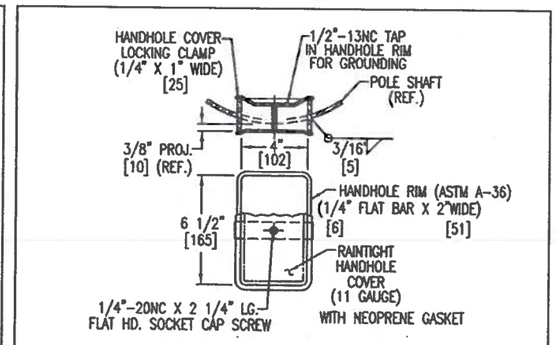

DETAIL "F" HANDHOLE DETAIL

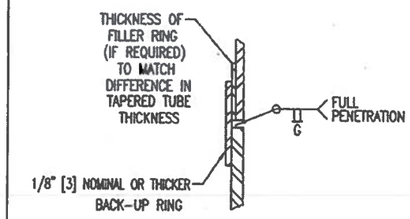

SPLICE DETAIL

WHEN REQUIRED BASED UPON MATERIAL AVAILABILITY

DETAIL "G"

MATERIAL SPECIFICATION	
SHAFT	STEEL OF 48,000 P.S.I. [330,948 kPa] MINIMUM YIELD AFTER FABRICATION: ASTM A-36 ASTM A-572 ASTM A-595 GR. A ASTM A-709 ASTM A-1008 ASTM A-1011 THE ABOVE LISTED MATERIALS ARE USED BASED UPON AVAILABILITY AT TIME OF PURCHASE OF MATRERIAL LOTS FOR PRODUCING POLE AND ARM SHAFTS
BASE PLATE	ASTM A-36 STEEL
PIPE	ASTM A-53 GR. B OR ASTM A-500 GR. B
ANCHOR BOLTS	ASTM F-1554 GR. 55
CONNECTION BOLTS	ASTM A-325
POLE FINISH	HOT DIP GALVANIZED PER ASTM A-123(AASHTO M-111)
HARDWARE FINISH	HOT DIP GALVANIZED PER ASTM F2329
WELDS LONGITUDINAL	BUTT WELD BY THE ELECTRICAL RESISTANCE PROCESS
WELDS CIRCUMFERENTIAL	BUTT WELD WITH PERMANENT BACK-UP RING (CONTINOUS)

ITEM	DESCRIPTION	TYPE PS-SB	TYPE 1, PS, RM	TYPE I-12-SB	TYPE FB-14-SB
A	HEIGHT	8'-0" [2.4]	10'-0" [3.0]	12'-0" [3.7]	14'-0" [4.3]
B	POLE BASE DIAMETER	5 1/4" [133] (3)	5 1/4" [133] (3)	5 1/4" [133] (3)	5 13/16" [148] (3)
C	PLATE THICKNESS	3/4" [19]	3/4" [19]	3/4" [19]	3/4" [19]
D	ANCHOR BOLT, HEAVY HEX NUT & LOCK WASHER	3/4" X 30" [19 X 762]	3/4" X 30" [19 X 762]	3/4" X 30" [19 X 762]	3/4" X 30" [19 X 762]
F	HANDHOLE SIZE	4" X 6 1/2" [102 X 165]	4" X 6 1/2" [102 X 165]	4" X 6 1/2" [102 X 165]	4" X 6 1/2" [102 X 165]
G	SLIPFITTER 4 1/2" O.D.	4" SCH.40	4" SCH.40	4" SCH.40	4" SCH.40
H	GROUNDING ANGLE	1"X 1" X 3/16" X 1 1/2" LG. [25 X 25 X 5 X 38 LG.]			
I	GROUNDING DRILL & TAP	DRILL #20 & TAP 1/4"-20NC			
J	GROUNDING STUD	1/4"-20NC X 1 1/2" SS ALL THRD. [7 X 38]			
K	GROUNDING NUTS & WASHERS	1/4"S.S [7]			

NOTES:

① WELD: ALL BUTT WELDS TO BE GROUND FLUSH WITH BASE METAL.

② WELDING OF STRUCTURES SHALL BE IN ACCORDANCE WITH THE LATEST EDITION OF THE AWS D1.1 STRUCTURAL WELDING CODE – STEEL

③ TAPERED ROUND SHAFT, WITH 0.14 TAPER, WITH 4 1/2" O.D. SLIPFITTER. [114]

④ ORDERING INFO.

TYPE PS-8-SB-DWG. NO.

SERIES

POLE HEIGHT

SB = SLIP BASE MOUNT POLE

⑤ DIMENSIONS INSIDE [ ] ARE METRIC. INCHES ARE CONVERTED TO MILLIMETERS, FEET TO METERS.

⑥ REFERENCE WASHINGTON D.O.T. STANDARD PLAN
J-21.10-03 SHEET 2 OF 2 FOUNDATION DETAILS
IS-12 PEDESTRIAN PUSH BUTTON POST
J-20.16-01 PEDESTRIAN SIGNAL STANDARD
J-21.15-01 TYPE 1 SIGNAL STANDARD
J-22.15-01 RAMP METER SIGNAL STANDARD
J-21.16-01 FLASHING BEACON TYPE 1 SIGNAL STANDARD

⑦ POLE SHAFT THICKNESS IS 11 GA. (.1196" [3 mm]).

⑧ AASHTO 2009 DESIGN PARAMETERS:
1.) LOCATION: WASHINGTON STATE
2.) BASIC WIND SPEED: 90 MPH.
3.) DESIGN LIFE: 50 YEARS
4.) FATIGUE CATEGORY : N/A

⑨ SS STUD, NUTS & WASHERS ARE FIELD INSTALLED.

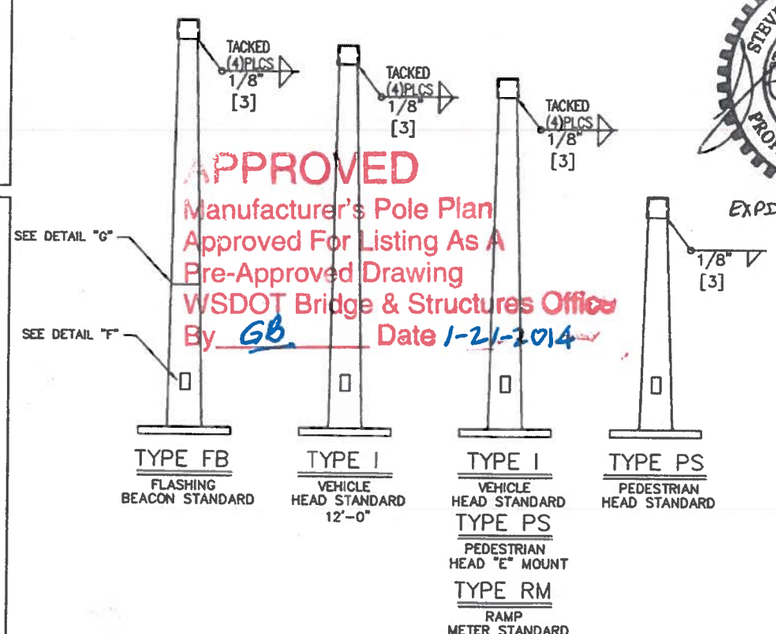

APPROVED
Manufacturer's Pole Plan
Approved For Listing As A
Pre-Approved Drawing
WSDOT Bridge & Structures Office
By GB Date 1-21-2014

STEVEN EUGENE TAYLOR
STATE OF WASHINGTON
50244
REGISTERED
PROFESSIONAL ENGINEER
1/21/2014
EXPIRES 9/14/2013

TAG NOTES:

1.) TAG MOUNTED W/ (2) DRIVE SCREWS.
2.) MOUNT BOTTOM OF TAG 0'-6" ABOVE TOP OF HAND HOLE.
3.) MANUFACTURER MONTH/YEAR = AMERON MM/YY
PART NO. = XXXXX-XX
DWG. NO. = WA10TR-2

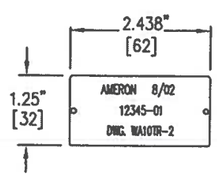

I.D. TAG DETAIL

REV	DATE	DESCRIPTION	BY	APPR
C	1/14	REV. PLATE THICKNESS AND NOTE 3	MHM	BB
B	8/13	REV. & ADD I.D. TAG, HARDWARE FINISH	DH	MM
A	8/13	REV'D. PER WSDOT STD. PLANS	DH	MM

Ameron POLE PRODUCTS DIVISION

WA. STATE SIGNAL STANDARD
TYPE PS, 1, RM & FB DETAILS
SLIP BASE

THIS DOCUMENT CONTAINS INFORMATION WHICH IS PROPRIETARY TO AMERON, IT SHALL NOT BE REPRODUCED, USED OR DISCLOSED TO ANYONE WITHOUT THE PRIOR WRITTEN PERMISSION OF AMERON.

DRAWN: BB	DATE: 11/10	SCALE: N.T.S.	DWG.NO. WA10TR-2	REV. C
APPR: RD	DATE: 11/10			