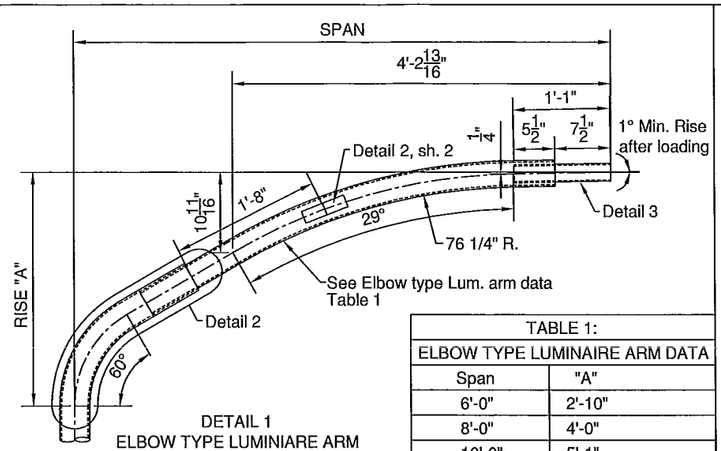

DETAIL 1
ELBOW TYPE LUMINIARE ARM

TABLE 1: ELBOW TYPE LUMINAIRE ARM DATA	
Span	"A"
6'-0"	2'-10"
8'-0"	4'-0"
10'-0"	5'-1"
12'-0"	6'-5"
14'-0"	7'-7"
◇14'-0"	5'-1"
16'-0"	8'-9"
◇16'-0"	6'-4"

◇ For 30'-0" Mounting Height

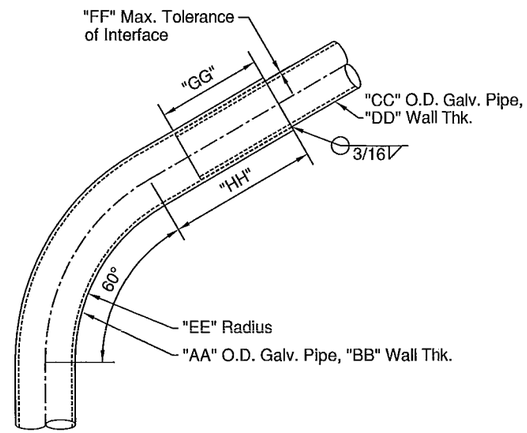

Arm Lengths	"AA"	"BB"	"CC"	"DD"	"EE"	"FF"	"GG"	"HH"
6'-0" Thru 10'-0"	4.0"	0.226"	3.5"	0.216"	1'-0"	0.024"	7"	10"
12'-0" Thru 16'-0"	4.5"	0.237"	4.0"	0.226"	1'-3"	0.013"	9"	19"

DETAIL 2
ELBOW TYPE ARM ATTACHMENT

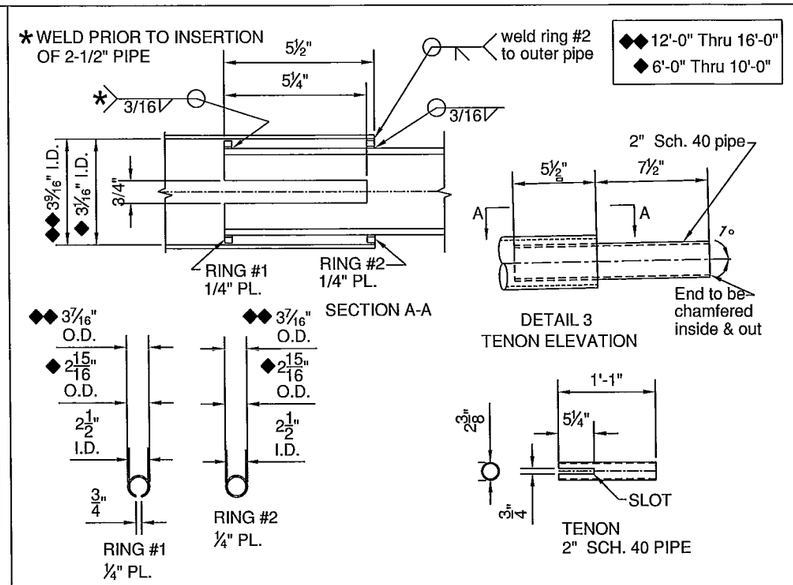

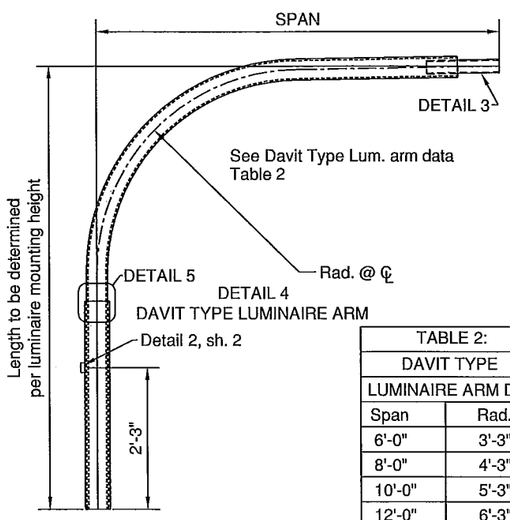

TABLE 2: DAVIT TYPE LUMINAIRE ARM DATA	
Span	Rad.
6'-0"	3'-3"
8'-0"	4'-3"
10'-0"	5'-3"
12'-0"	6'-3"
14'-0"	7'-3"
16'-0"	8'-3"

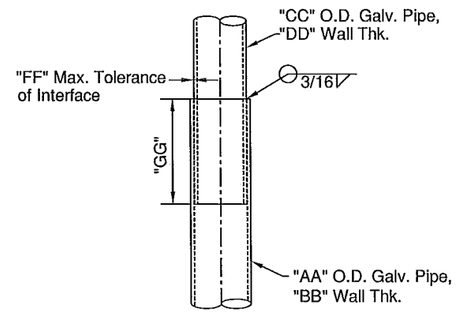

Arm Lengths	"AA"	"BB"	"CC"	"DD"	"FF"	"GG"
6'-0" Thru 10'-0"	4.0"	0.226"	3.5"	0.216"	0.024"	7"
12'-0" Thru 16'-0"	4.5"	0.237"	4.0"	0.226"	0.013"	9"

DETAIL 5
DAVIT TYPE ARM ATTACHMENT

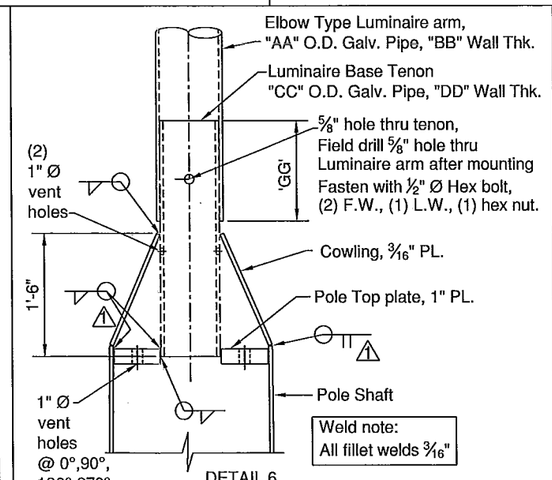

DETAIL 6
LUMINAIRE ARM BASE

Arm Lengths	"AA"	"BB"	"CC"	"DD"	"GG"
6'-0" Thru 10'-0"	4.0"	0.226"	3.5"	0.216"	7"
12'-0" Thru 16'-0"	4.5"	0.237"	4.0"	0.226"	9"

APPROVED
Manufacturer's Pole Plan
Approved For Listing As A
Pre-Approved Drawing
WSDOT Bridge & Structures Office
By GB Date 5-28-09

PROFESSIONAL ENGINEER STATE OF NEVADA
ROBERT W. AUGUSTINE
Exp. 12-31-10
CIVIL
No. 17425
5/19/09

Maico Industries, Inc.
936 Highway 14
Ellsworth, KS 67439
Tel: 785-472-5390 Fax: 785-472-3729

JOB NAME & NUMBER:

DESCRIPTION : Washington State D.O.T. Steel Strain Pole - Type V Class 1900 lbs - 7200 lbs

DRAWN : DS | DATE : 04/21/09
CHECKED : | SCALE : NTS

Rev.	Date	Descriptions	Approved
1	04/30/09	Rev. per Washington State D.O.T.	
2	05/07/09	Rev. per Washington State D.O.T.	

DRAWING NUMBER : WA-SP-5 SH. 3 of 3
REV: 2