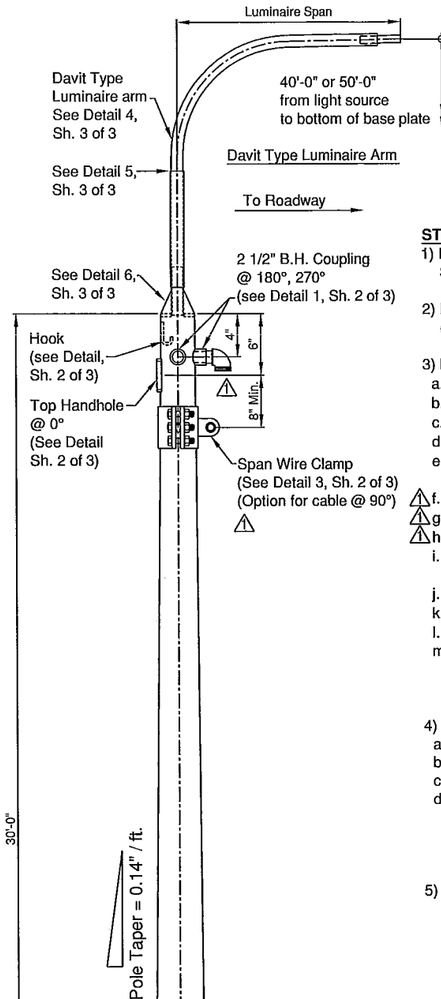

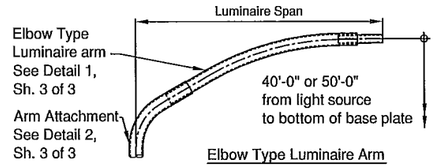

STEEL STRAIN POLE NOTES

1) Designed in accordance with 2001 Edition AASHTO Standard Specifications for Structural Supports for Highway Signs, Luminaires and Traffic Signals.

2) Perform all welding in accordance with the American Welding Society Structural Welding Code (Steel) ANSI / AWS D1.1 (current edition).

3) Materials:

a. Poles	ASTM A572, Gr. 65
b. Clamp	ASTM A36
c. Handhole Frame	ASTM A572, Gr. 50
d. Handhole Cover	ASTM A36
e. Base Plate	ASTM A572, Gr. 50
Hole Dia. = Anchor Bolt Dia. + 1/4" △1	
△1 f. Anchor Bolts	ASTM F1554 Grade 105
△1 g. Anchor Bolt nuts	ASTM A563 Grade A Heavy Hex
△1 h. Anchor Bolt washers	ASTM F436 Type 1
i. Bolts (except Anchor Bolts)	ASTM A325 Type 1
Hole Dia. = Bolt Dia. + 1/8"	
j. Nuts	ASTM A563 Galv.
k. Flat washers	ASTM F436
l. Stainless Steel Screws	AISI Type 316
m. Galvanization:	
All nuts, bolts and washers;	ASTM F2329
All other steel;	ASTM 123

4) Pole Notes:
a. Poles to be 12-sided.
b. The Pole shall be tapered with the diameter changing at a rate of 0.14 inch per foot.
c. Transverse welds are allowed only at the base.
d. A 2"x4" (max.) 22 ga. galvanized identification tag, affixed to pole with spray on bonding agent after galvanizing. Fabricators to provide details for approval. Identification tag located on inside of pole, visible from handhole. See Detail 2, Sh. 2 of 3.

5) One hundred percent of full-penetration groove welds and a random 25 percent of partial penetration groove welds shall be inspected. Full-penetration groove weld inspection shall be performed by nondestructive methods of radiography or ultrasonics.

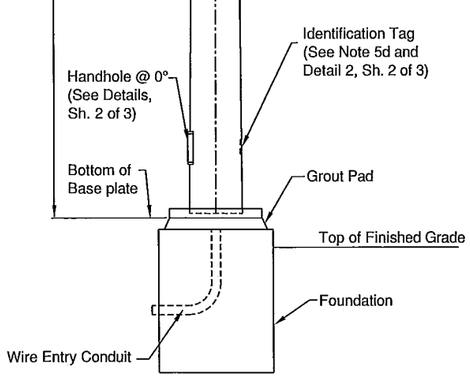

ELEVATION VIEW
(Not to Scale)

TABLE OF STRAIN POLE VARIABLES										
POLE CLASS	POLE			BASE PLATE		ANCHOR BOLTS				
	Base (in)	Tip (in)	Wall Thk. (in)	Thk. (in)	Width (in)	No. of Bolts	Anchor Bolt Dia. (in)	Anchor Bolt Length (in)	Bolt Circle (in)	Anchor Plate size (in)
2700 lbs.	12"	7 13/16"	1/4" △1	1 3/4"	15"	4	1 1/4"	60"	16"	1"
3700 lbs.	14"	9 13/16"	1/4" △1	1 3/4"	17"	4	1 3/8"	60"	19"	1"
4800 lbs.	14"	9 13/16"	5/16"	2"	18"	4	1 1/2"	60"	20"	1"
5600 lbs.	15"	10 13/16"	5/16"	2"	18"	4	1 1/2"	60"	20"	1"
6300 lbs.	16"	11 13/16"	5/16"	2"	20"	4	1 3/4"	66"	22"	1"
7200 lbs.	17"	12 13/16"	5/16"	2"	20"	4	1 3/4"	66"	22"	1"

TYPE V STEEL STRAIN POLE

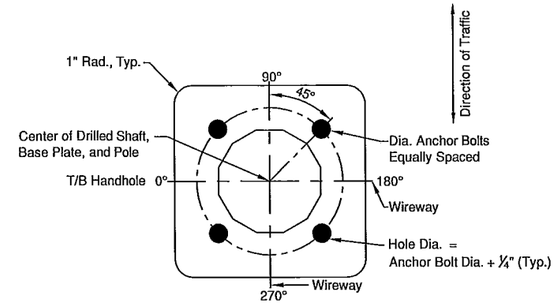

VIEW B-B
BASE PLATE

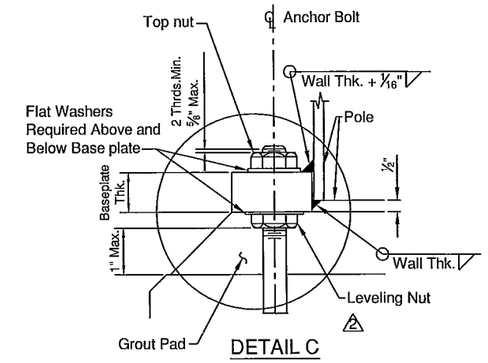

DETAIL C

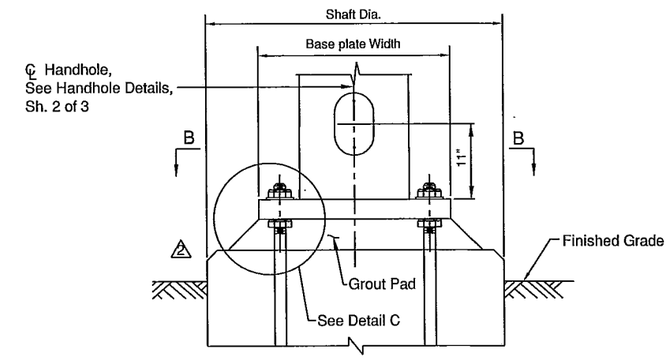

BASE PLATE, ANCHOR BOLTS
AND HANDHOLE ELEVATION

APPROVED
Manufacturer's Pole Plan
Approved For Listing As A
Pre-Approved Drawing
WSDOT Bridge & Structures Office
By GB Date 5-28-09

PROFESSIONAL ENGINEER STATE OF NEVADA
ROBERT W. AUGUSTINE
Exp. 12-31-~~09~~ 10
CIVIL
No. 17425
5/19/09

Maico Industries, Inc.
936 Highway 14
Ellsworth, KS 67439
Tel: 785-472-5390 Fax: 785-472-3729

JOB NAME & NUMBER:

DESCRIPTION : Washington State D.O.T. Steel Strain Pole - Type V Class 1900 lbs - 7200 lbs

DRAWN : DS | DATE : 4/21/09
CHECKED : | SCALE : NTS

Rev.	Date	Descriptions	Approved
△1	04/30/09	Rev. per Washington State D.O.T.	
△2	05/07/09	Rev. per Washington State D.O.T.	

DRAWING NUMBER : WA-SP-5 SH. 1 of 3
REV: 2