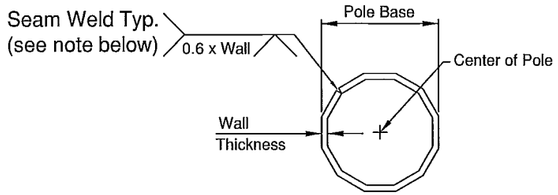

POLE DETAILS

ALL OUTSIDE DIAMETER DISTANCES ARE MEASURED FLAT TO FLAT

NOTE:
LONGITUDINAL SEAM WELDS WITHIN 6" OF CIRCUMFERENTIAL WELDS SHALL BE COMPLETE PENETRATION WELDS.

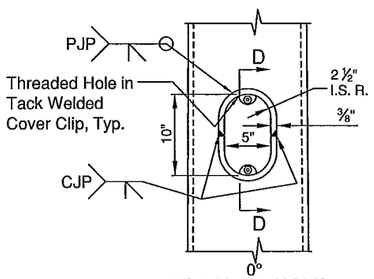

TOP HAND HOLE ELEVATION

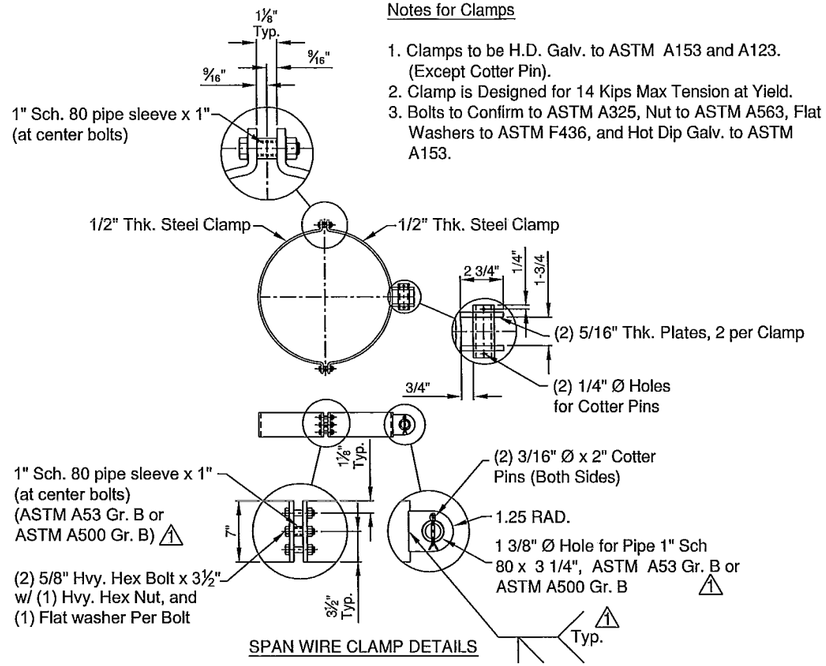

SPAN WIRE CLAMP DETAILS

Notes for Clamps

1. Clamps to be H.D. Galv. to ASTM A153 and A123. (Except Cotter Pin).
2. Clamp is Designed for 14 Kips Max Tension at Yield.
3. Bolts to Confirm to ASTM A325, Nut to ASTM A563, Flat Washers to ASTM F436, and Hot Dip Galv. to ASTM A153.

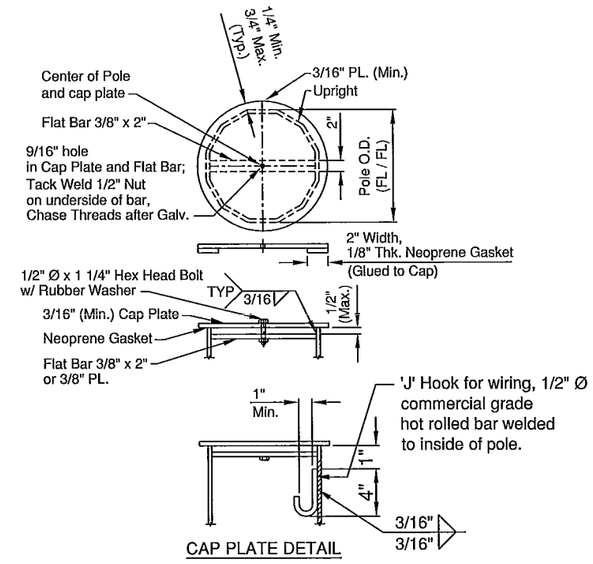

CAP PLATE DETAIL

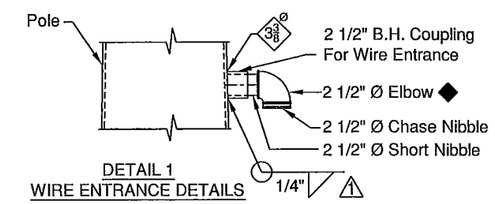

DETAIL 1
WIRE ENTRANCE DETAILS

◆ 2 1/2" Ø weatherhead may be substituted for the elbow and nipple assembly. 1

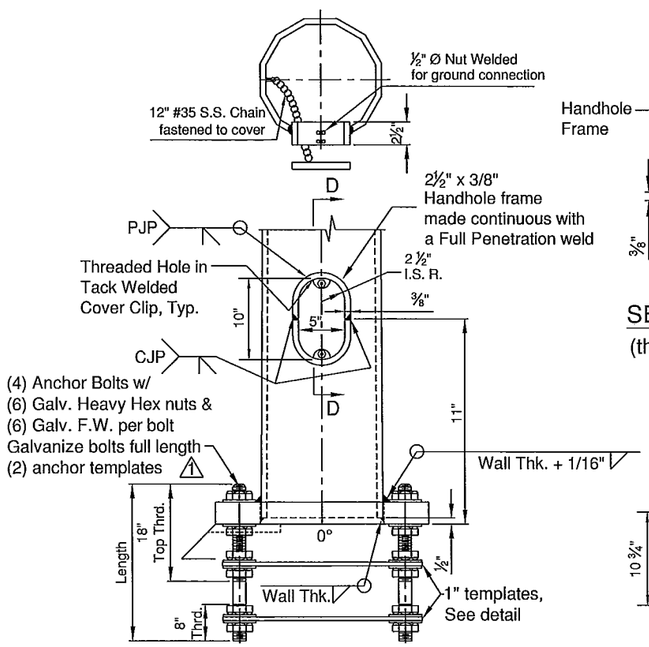

HAND HOLE, BASE PLATE & ANCHOR BOLT ELEVATION

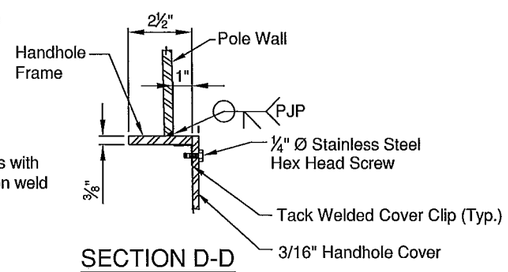

SECTION D-D
(thru Hand hole)

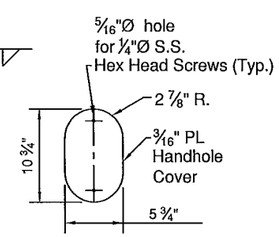

HAND HOLE COVER

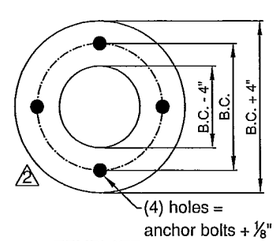

TEMPLATE
1" PL.

4"x6", 22 ga. Galvanized Identification Tag.
Affix Tag with spray on bonding agent.
Tag stamped as shown w/ ⅜" High text.

MAICO	
SRXXX. STD. NO. X	STATE ROUTE & SIGNAL STANDARD NO.
STA. XX+XX.XX	STATION
DWG. XXXXXX	APPROVED DWG. NO.
FAB. MM/YY	FABRICATION DATE

Pole shaft: located as shown on sh. 1

DETAIL 2
IDENTIFICATION TAG DETAIL

APPROVED
Manufacturer's Pole Plan
Approved For Listing As A
Pre-Approved Drawing
WSDOT Bridge & Structures Office
By GB **Date** 5-28-09

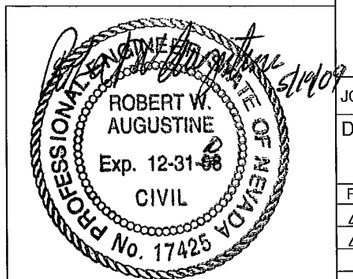

Maico Industries, Inc.
936 Highway 14
Ellsworth, KS 67439
Tel: 785-472-5390 Fax: 785-472-3729

JOB NAME & NUMBER:

DESCRIPTION : Washington State D.O.T. Steel Strain Pole - Type IV Class 1900 lbs - 7200 lbs

DRAWN : DS | DATE : 04/21/09
CHECKED : | SCALE : NTS

Rev.	Date	Descriptions	Approved
1	04/30/09	Rev. per Washington State D.O.T.	
2	05/07/09	Rev. per Washington State D.O.T.	

DRAWING NUMBER : WA-SP-4 SH. 2 of 2

REV: 2