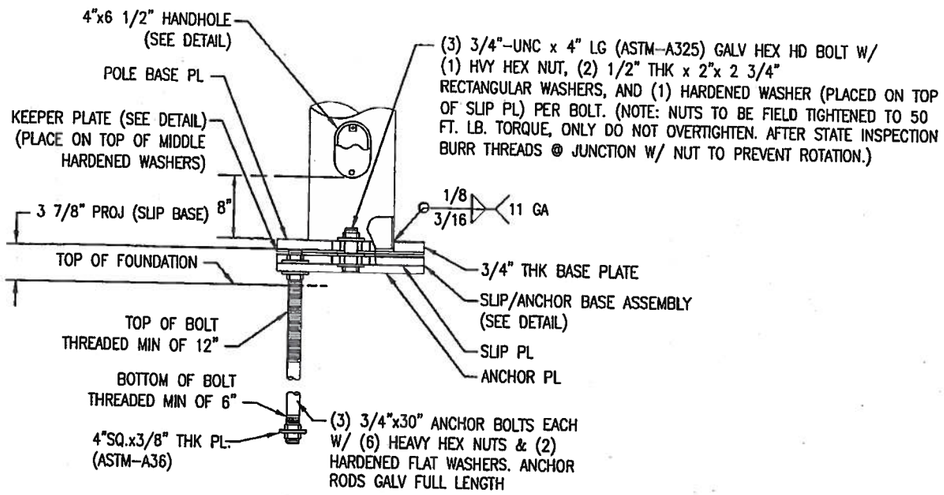

SLIP BASE CONNECTION DETAIL

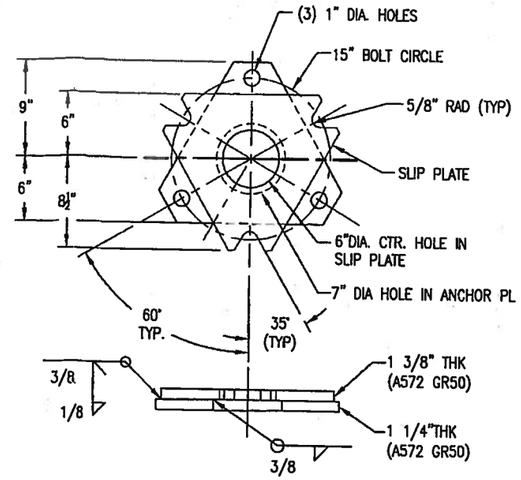

SLIP/ANCHOR BASE ASSEMBLY

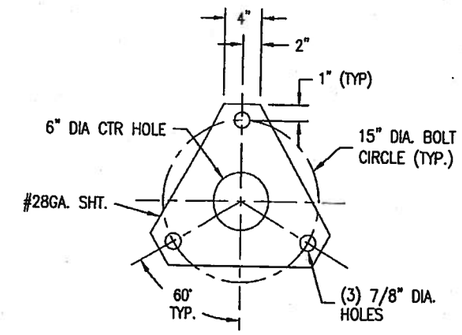

KEEPER PLATE DETAIL

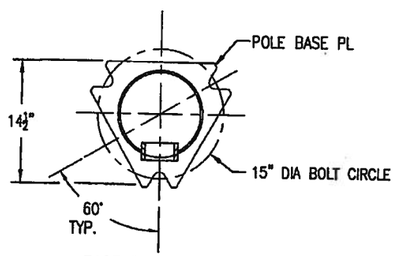

BASE PLATE DETAIL (SLIP BASE)

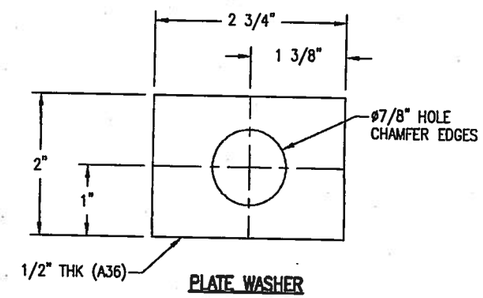

PLATE WASHER

NOTE: FOR PLATE WASHER PLACEMENT SEE STANDARD PLAN J-21.10-01

APPROVED
Manufacturer's Pole Plan
Approved For Listing As A
Pre-Approved Drawing
WSDOT Bridge & Structures Office
By GB Date 8-21-2011

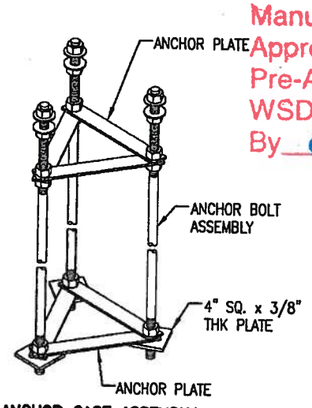

ANCHOR CAGE ASSEMBLY

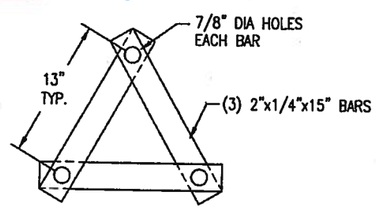

ANCHOR BOLT TEMPLATE DETAIL

(TWO SETS REQ'D PER POLE, UNFINISHED) LOCATE 6" FROM TOP & ABOVE SQ. WASHERS @ BOTTOM

STATE OF OHIO
PAUL E. HAIG
E-041183
6/3/11
REGISTERED
PROFESSIONAL ENGINEER

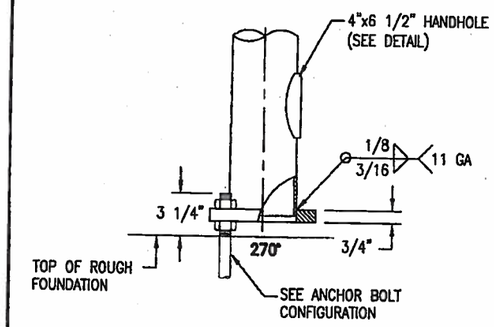

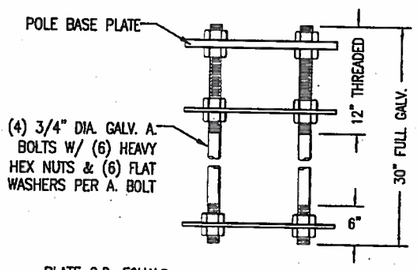

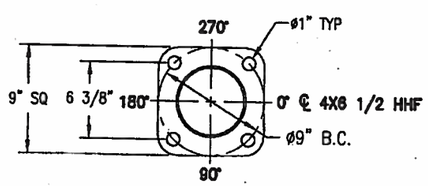

BASE PLATE DETAIL

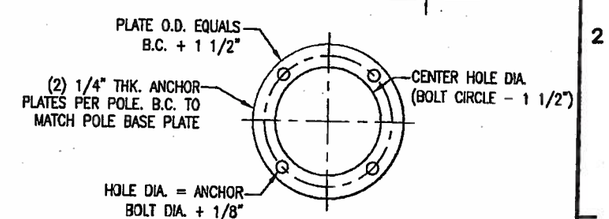

ANCHOR BOLT CONFIGURATION
(SHIPPED UNASSEMBLED)

FIXED BASE CONNECTION DETAIL

STATE: WASHINGTON	REQ# / SO# : 0408-06-95	REV	DESCRIPTION	DATE	REV BY	CHK BY
PROJECT NAME: –			REVISIONS			

STANDARD SIGNAL W/ POST TOP, TYPE PS & I
STATE OF WASHINGTON DOT

Union Metal Corporation

This document and the contents herein are proprietary and the property of Union Metal Corporation. This document is not to be, copied, reproduced, or used for any reason except for the purposes which it was issued without the express written consent of Union Metal Corporation. Furthermore Union Metal Corporation reserves the right to recall this document and all copies at any time for any reason.

DESIGNED BY	CHECKED BY	DATE	SCALE	ENG REF
RT	Ed	10/20/75	NTS	TA-10025
TA-10025			REVISION R17	SHEET 2 OF 2

Hardcopies of this document are considered uncontrolled and are to be used for reference only. Those using this document for reference must take all precautions available to ensure that this document matches the current revision maintained in digital format, within but a single source and protected by edit restrictions.