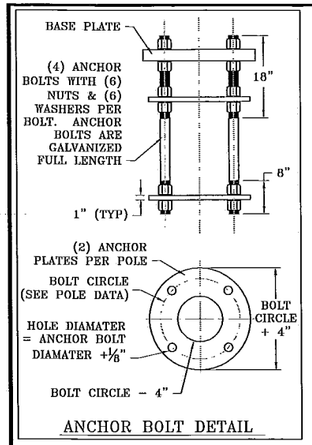

ANCHOR BOLT DETAIL

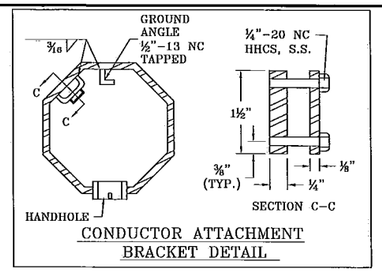

CONDUCTOR ATTACHMENT BRACKET DETAIL

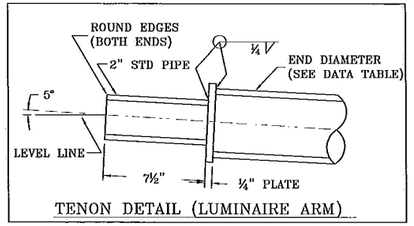

TENON DETAIL (LUMINAIRE ARM)

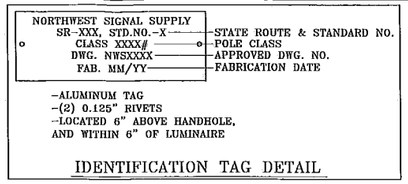

IDENTIFICATION TAG DETAIL

POLE DATA

ITEM	POLE CLASS (RESULTANT HORIZONTAL TENSION)						
	1900#	2700#	3700#	4800#	5600#	6300#	7200#
POLE GAGE	.25	.25	.25	.3125	.3125	.3125	.3125
BASE PLATE WIDTH	15"	15"	17"	18"	18"	20"	20"
ANCHOR BOLT CIRCLE	16"	16"	19"	20"	20"	22"	22"
POLE BASE DIA	10"	12"	14"	14"	15"	16"	17"
BASE PLATE THICKNESS	1 3/4"	2"	2 1/2"	2 1/2"	2 3/4"	2 3/4"	3"
ANCHOR BOLT SIZE	1"x36"	1 1/4"x60"	1 3/8"x60"	1 1/2"x60"	1 1/2"x60"	1 3/4"x66"	1 3/4"x66"

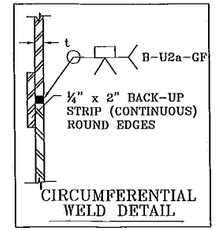

CIRCUMFERENTIAL WELD DETAIL

LUMINAIRE ARM DATA

ARM LENGTH (FT)	ELBOW DIAMETER (IN)(1)	R (IN)	THICKNESS (IN)	B (IN)
6	4	12	.188	24
8	4	12	.188	36
10	4	12	.188	51
12	4	12	.188	65
14	4	12	.188	79
16	4	12	.188	93

(1) ELBOWS TO BE MADE FROM STD PIPE

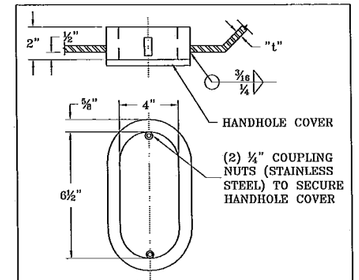

HANDHOLE DETAIL

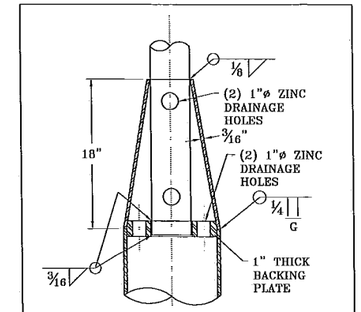

CONE DETAIL

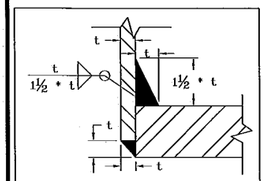

BASE WELD DETAIL

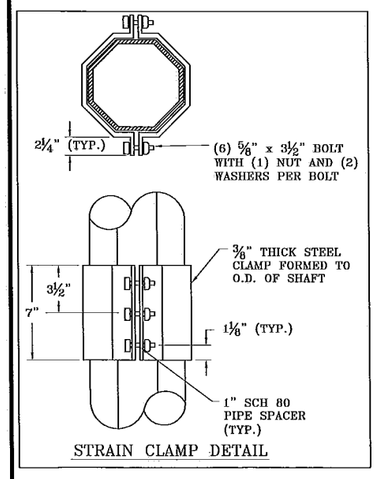

STRAIN CLAMP DETAIL

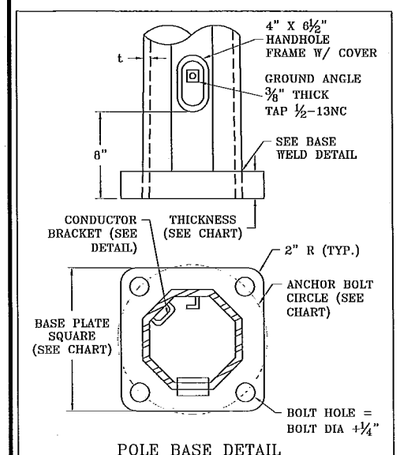

POLE BASE DETAIL

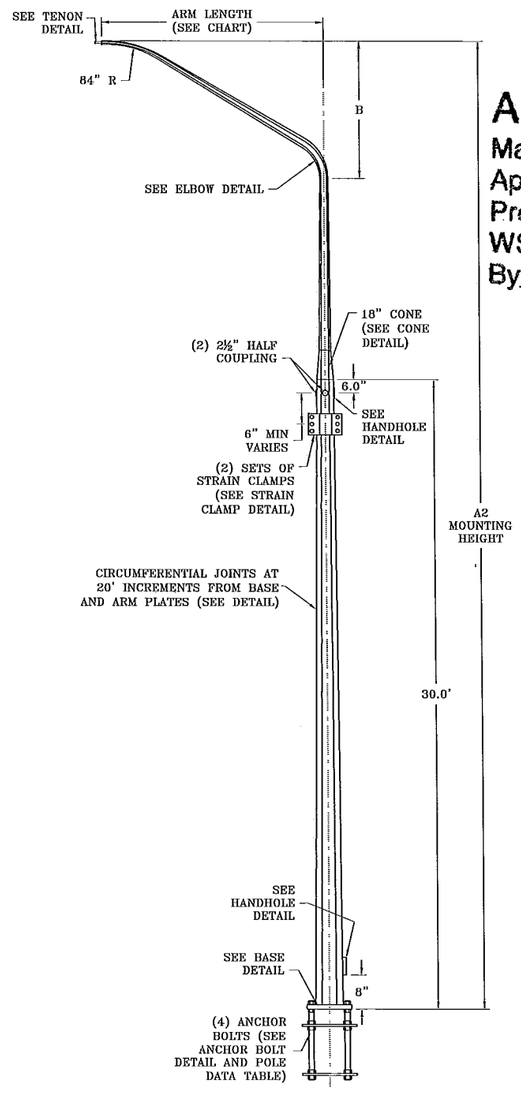

TYPE V

APPROVED
Manufacturer's Pole Plan
Approved For Listing As A
Pre-Approved Drawing
WSDOT Bridge & Structures Office
By GB Date 4-20-2011

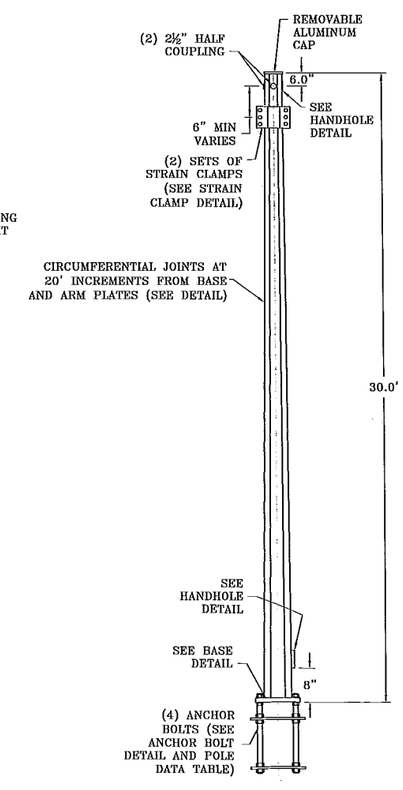

TYPE IV

POLE SCHEDULE

INTERSECTION:

POLE #	CLASS	A2	LUM. LEN.

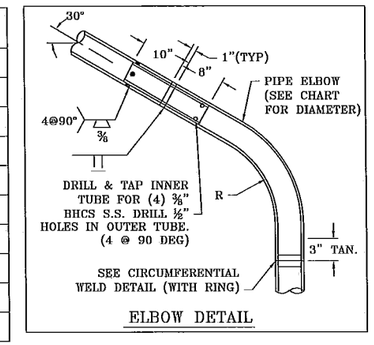

ELBOW DETAIL

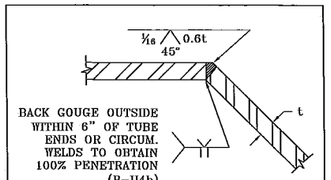

LONGITUDINAL WELD DETAIL

TWO PER TUBE, @ 180 DEGREES

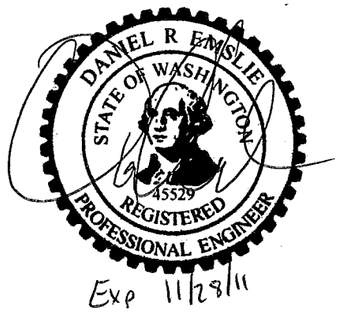

NOTES:

DESIGN CRITERIA
2009 AASHTO STANDARD SPECIFICATIONS FOR STRUCTURAL SUPPORTS FOR HIGHWAY SIGNS, LUMINAIRES, AND TRAFFIC SIGNALS.
- 90 MPH 3 SECOND GUST
- 50 YEAR DESIGN LIFE/RECURRENCE INTERVAL

GENERAL
- POLE AND MAST ARMS SHALL BE OCTAGONAL IN CROSS SECTION. POLE SHAFT SHALL HAVE TAPER OF 0.14 IN/FT.
- FABRICATION SHALL CONFORM TO 2009 AASHTO STANDARD SPECIFICATIONS FOR STRUCTURAL SUPPORTS FOR HIGHWAY SIGNS, LUMINAIRES, AND TRAFFIC SIGNALS AND AWS D1.1 STRUCTURAL STEEL WELDING CODE.
- LONGITUDINAL SEAM WELD IS 60% MIN. PENETRATION EXPECT FOR 6 INCHES FROM END OF SECTION AT FLANGE, BASE PLATE AND SLIP JOINT IS 100% PENETRATION.

MATERIALS
- ALL STEEL IN TUBES, BASE PLATES, FLANGE PLATES, GUSSET PLATES & HANDHOLE FRAMES SHALL CONFORM TO ASTM A572 GR50.
- ANCHOR BOLTS SHALL CONFORM TO ASTM F1554 GR 105, NUTS SHALL CONFORM TO ASTM A563 GR DH HEAVY HEX, WASHERS SHALL CONFORM TO ASTM F436 TYPE I.
- ANCHOR PLATE SHALL CONFORM TO ASTM A36.
- CONNECTION BOLTS SHALL CONFORM TO ASTM A325, NUTS SHALL CONFORM TO ASTM A563 GR DH HEAVY HEX, WASHERS SHALL CONFORM TO ASTM F436 TYPE I.
- GALVANIZING SHALL CONFORM TO ASTM A123 & A153.
- HANDHOLE COVERS SHALL CONFORM TO ASTM A1011 GR50.
- ALL PIPE TENONS AND WIRE GUIDES SHALL CONFORM TO ASTM A53 GR B.
- FASTENERS LESS THEN 1/2" IN DIAMETER SHALL BE STAINLESS STEEL OR BRASS.
- POLE CAPS SHALL BE CAST ALUMINUM.

NO.	REVISION	DATE
1	UPDATED FOR AASHTO 2001	4/03
2	UPDATED TO AASHTO 2009, NEW BOARDER, MINOR DESIGN CHANGES	3/11

WSDOT TYPE IV & V STRAIN POLE STANDARD WITH TYPE II LUMINAIRE ARM

12965 SW Herman Rd.
Tualatin, OR 97062
PH: 503-635-4351
FX: 503-635-4341
www.nwsignal.com

Northwest Signal
Managing mobility

JOB NUMBER
XXXXXX

DRAWING NUMBER
NWS3525

DESIGNED BY:
D. EMSLIE 6/18/08

DRAWING BY:
D. EMSLIE 6/18/08

CHECKED BY:
J. MEUSCH 6/27/08

SHEET 1 OF 1