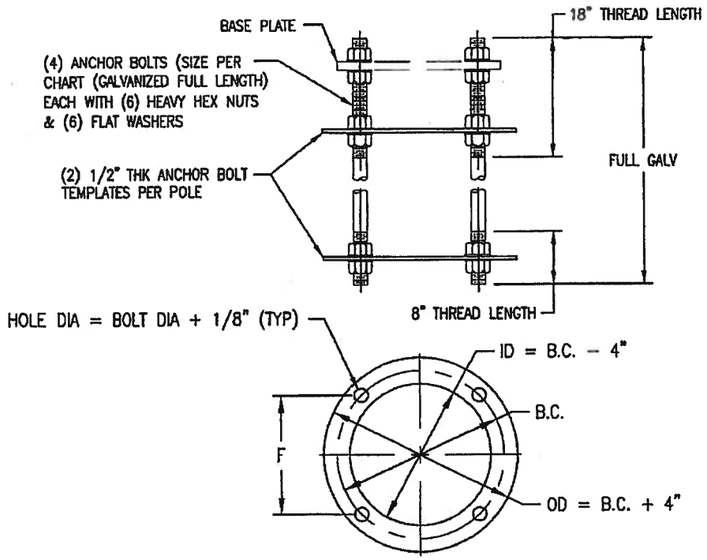

ANCHOR BOLT ASSEMBLY
(SHIPPED UNASSEMBLED)
(REF: B100-A386)

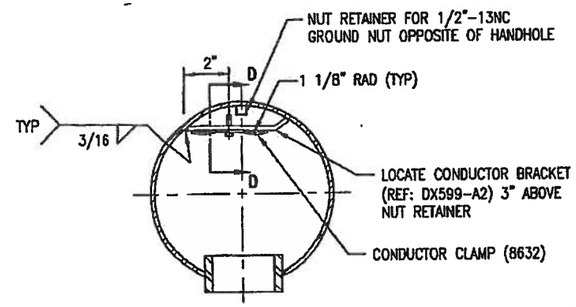

SECTION C-C
CONDUCTOR ATTACHMENT DETAIL

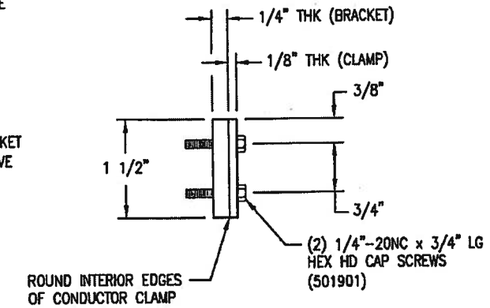

SECTION D-D

APPROVED
Manufacturer's Pole Plan
Approved For Listing As A
Pre-Approved Drawing
WSDOT Bridge & Structures Office
By GB Date 11-29-2012

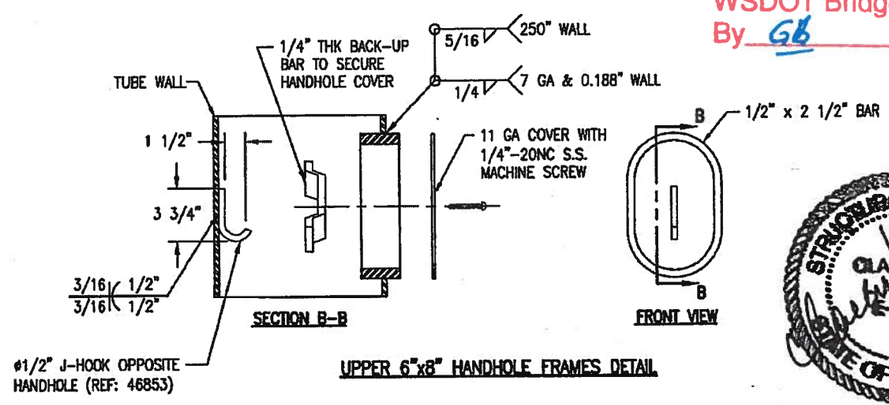

SECTION B-B

FRONT VIEW

UPPER 6"x8" HANDHOLE FRAMES DETAIL

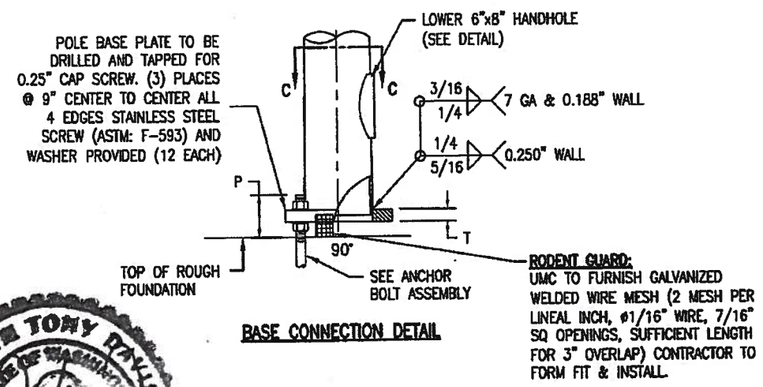

BASE CONNECTION DETAIL

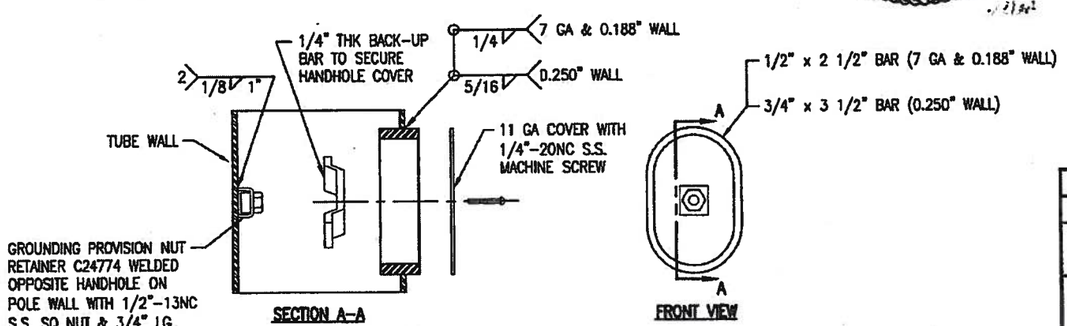

SECTION A-A

FRONT VIEW

LOWER 6"x8" HANDHOLE FRAME DETAIL

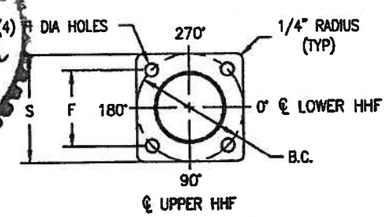

BASE PLATE DETAIL

STATE: WASHINGTON	REQ# / SO# : DWA-26948-1	REV	DESCRIPTION	DATE	REV BY	CHK BY
PROJECT NAME: WSDOT CAMERA POLES			REVISIONS			

ROUND TAPERED STEEL CAMERA POLES-LOAD CASE #1
WASHINGTON STATE DEPARTMENT OF TRANSPORTATION

Union Metal Corporation

This document and the contents herein are proprietary and the property of Union Metal Corporation. This document is not to be, copied, reproduced, or used for any reason except for the purposes which it was issued without the express written consent of Union Metal Corporation. Furthermore Union Metal Corporation reserves the right to recall this document and all copies at any time for any reason.

DESIGNED BY	CHECKED BY	DATE	SCALE	ENG REF
LRR	SAD	1/8/09	NTS	P33-B317

P33-B318 | REVISION R11.1 | SHEET 2 OF 2

Hardcopies of this document are considered uncontrolled and are to be used for reference only. Those using this document for reference must take all precautions available to ensure that this document matches the current revision maintained in digital format, within but a single source and protected by edit restrictions.