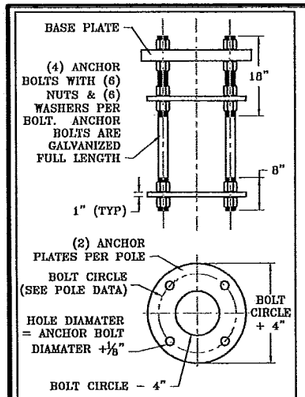

ANCHOR BOLT DETAIL

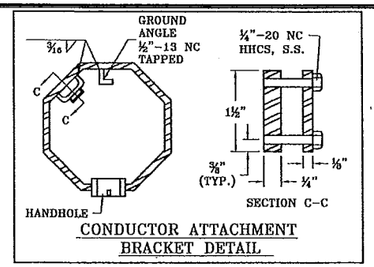

CONDUCTOR ATTACHMENT BRACKET DETAIL

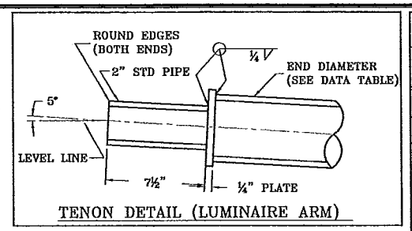

TENON DETAIL (LUMINAIRE ARM)

LUMINAIRE ARM DATA

ARM LENGTH (FT)	BASE DIAMETER (IN)	END DIAMETER (IN)	THICKNESS (IN)	TOTAL LENGTH (FT)
6	5.75	4	.188	11.5
8	5.75	3.75	.188	13.5
10	5.75	3.5	.188	15.5
12	5.75	3.25	.188	17.5
14	5.75	3	.188	19.5
16	5.75	2.75	.188	21.5

POLE SCHEDULE

INTERSECTION:

POLE #	POLE DESIGNATION	MAST ARM LENGTH (FT)	POLE HEIGHT (FT)	MAST ARM HEIGHT A1 (FT)	MOUNTING HEIGHT A2 (FT)	LUM. ARM LENGTH C (FT)	TENON LOCATIONS FROM POLE CENTERLINE (FT) B1	B3	B6	B9		3/4" COUPLING FROM POLE ℄ (FT)	B5	NOTES

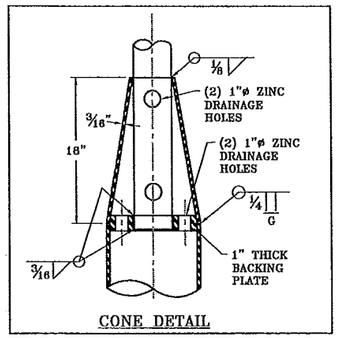

CONE DETAIL

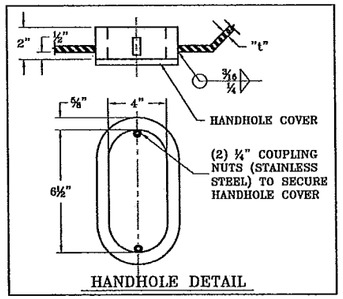

HANDHOLE DETAIL

POLE DATA

ARM LENGTH	TYPE II POLE		TYPE III POLE		BASE PLATE		ANCHOR BOLTS	
	DIA	THICK	DIA	THICK	SQUARE	THICK	BOLT CIRCLE	DIA X L X H
15-45	14	.25	14	.25	18	1.75	18	1.5 X 60 X PL.
>45-65	17	.3125	17	.3125	22	2.0	22	2 X 60 X PL.

APPROVED
Manufacturer's Pole Plan
Approved For Listing As A
Pre-Approved Drawing
WSDOT Bridge & Structures Office
By GB. Date 8/6/2008

MAST ARM DATA

ARM			ARM & POLE PLATE					MAX LOAD
LENGTH	BASE DIA	THICK.	SQUARE	ARM PL THICK	BOLT SIZE	POLE PL THICK	BOLT CIRCLE	AREA X DIST. (FT^3)
15	6	.188	15 X 15	1.5	1.25 X 3.5	1.5	15	268
20	7	.188	15 X 15	1.5	1.25 X 3.5	1.5	15	410
25	8	.188	15 X 15	1.5	1.25 X 3.5	1.5	15	552
30	10	.188	15 X 15	1.5	1.25 X 3.5	1.5	15	871
35	11	.188	15 X 15	1.5	1.25 X 3.5	1.5	15	1084
40	11	.25(1)	15 X 15	1.5	1.25 X 3.5	1.5	15	1297
45	11.5	.25(1)	15 X 15	1.5	1.25 X 3.5	1.5	15	1510
50	12	.25(1)	20 X 20	2.0	1.75 X 4	1.75	19.5	1723
55	13	.25(1)	20 X 20	2.0	1.75 X 4	1.75	19.5	1936
60	14.5	.25(1)	20 X 20	2.0	1.75 X 4	1.75	19.5	2638
65	15.5	.25(1)	20 X 20	2.0	1.75 X 4	1.75	19.5	2931

(1) THICKNESS SHALL BE REDUCED TO 0.188" 20' FROM POLE

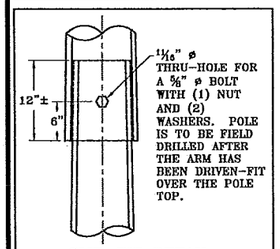

SLIP-FIT DETAIL

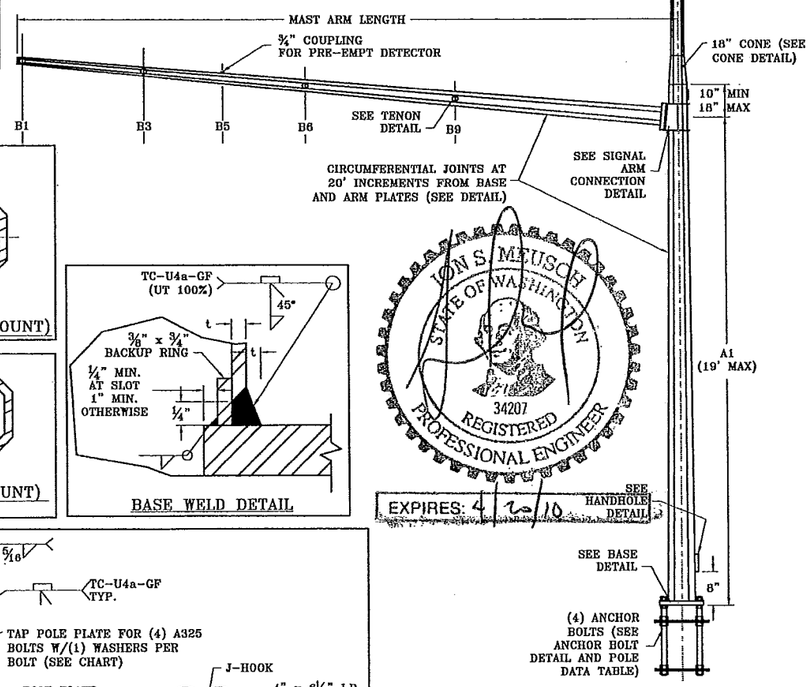

TYPE III

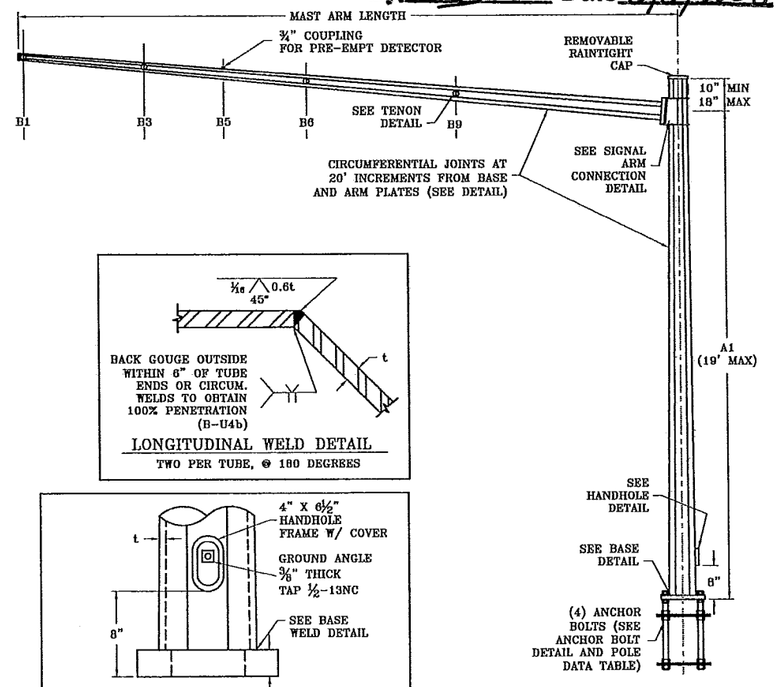

TYPE II

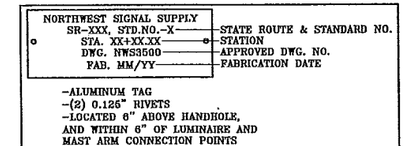

IDENTIFICATION TAG DETAIL

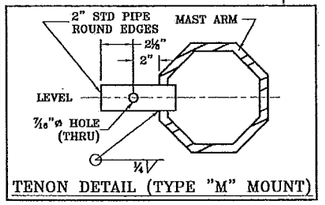

TENON DETAIL (TYPE "M" MOUNT)

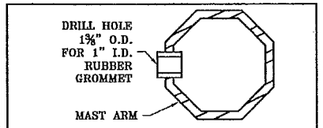

HOLE DETAIL (TYPE "N" MOUNT)
(OPTIONAL)

BASE WELD DETAIL

LONGITUDINAL WELD DETAIL
TWO PER TUBE, @ 180 DEGREES

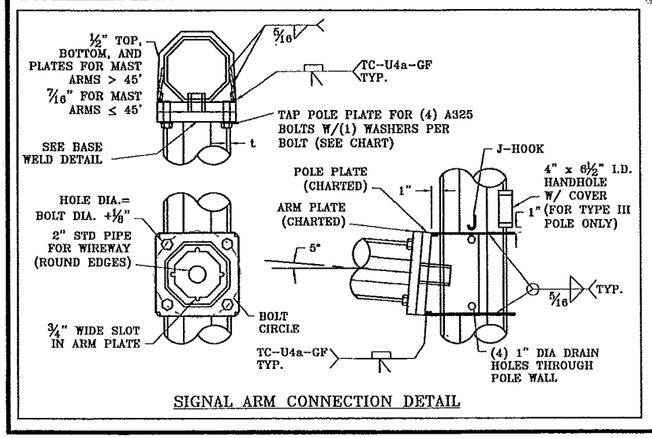

SIGNAL ARM CONNECTION DETAIL

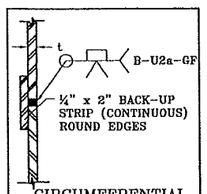

CIRCUMFERENTIAL WELD DETAIL

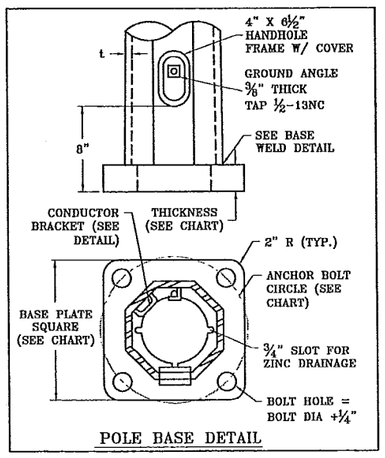

POLE BASE DETAIL

NOTES:

DESIGN CRITERIA
2001 AASHTO STANDARD SPECIFICATIONS FOR STRUCTURAL SUPPORTS FOR HIGHWAY SIGNS, LUMINAIRES, AND TRAFFIC SIGNALS.
-90 MPH 3 SECOND GUST
-50 YEAR DESIGN LIFE/RECURRENCE INTERVAL
-FATIGUE CATEGORY III WITH 65 MPH TRUCK VELOCITY

CAFL AT CRITICAL CONNECTIONS
-POLE TO BASE PLATE CONNECTION = E
-ARM TO PLATE CONNECTION = E
-SIMPLEX GUSSET = ET
-POLE WALL AT SIMPLEX GUSSET = E'
-POLE SHAFT = B'

GENERAL
-POLE AND MAST ARMS SHALL BE OCTAGONAL IN CROSS SECTION. POLE SHAFT SHALL HAVE TAPER OF 0.14 IN/FT.
-FABRICATION SHALL CONFORM TO 2001 AASHTO STANDARD SPECIFICATIONS FOR STRUCTURAL SUPPORTS FOR HIGHWAY SIGNS, LUMINAIRES, AND TRAFFIC SIGNALS AND AWS D1.1 STRUCTURAL STEEL WELDING CODE.

MATERIALS
-ALL STEEL IN TUBES, BASE PLATES, FLANGE PLATES, GUSSET PLATES & HANDHOLE FRAMES SHALL CONFORM TO ASTM A572 GR50.
-ANCHOR BOLTS SHALL CONFORM TO ASTM F1554 GR 105, NUTS SHALL CONFORM TO ASTM A563 GR DH HEAVY HEX, WASHERS SHALL CONFORM TO ASTM F436 TYPE I.
-ANCHOR PLATE SHALL CONFORM TO ASTM A36.
-CONNECTION BOLTS SHALL CONFORM TO ASTM A325, NUTS SHALL CONFORM TO ASTM A563 GR DH HEAVY HEX, WASHERS SHALL CONFORM TO ASTM F436 TYPE I.
-GALVANIZING SHALL CONFORM TO ASTM A123 & A153.
-HANDHOLE COVERS SHALL CONFORM TO ASTM A1011 GR50.
-ALL PIPE TENONS AND WIRE GUIDES SHALL CONFORM TO ASTM A53 GR B.
-FASTENERS LESS THEN 1/2" IN DIAMETER SHALL BE STAINLESS STEEL OR BRASS.
-POLE AND ARM CAPS SHALL BE CAST ALUMINUM.

NO.	REVISION	DATE
1	UPDATED FOR AASHTO 2001	4/03
2	MINOR REVISONS	10/03
3	NEW BOARDER, MINOR DESIGN CHANGES	6/08

NORTHWEST SIGNAL SUPPLY, INC
12965 SW Herman Rd. - Tualatin, OR 97062
PH: 503-635-4351, FX: 503-635-4341
www.nwsignal.com

WSDOT TYPE II & III MAST ARM POLE STANDARD WITH TYPE I LUMINAIRE ARM

DESIGNED BY	DATE	CHECKED BY	DATE
D. EMSLIE	6/10/08	J. MEUSCH	6/27/08

DRAWING NUMBER: NWS3500
SHEET 1 OF 1
JOB NUMBER