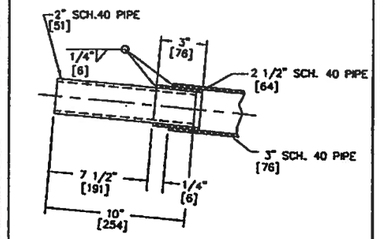

DETAIL "D" END OF ARM TENON DETAIL

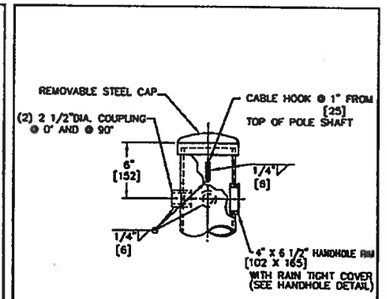

DETAIL "E" TOP DETAIL

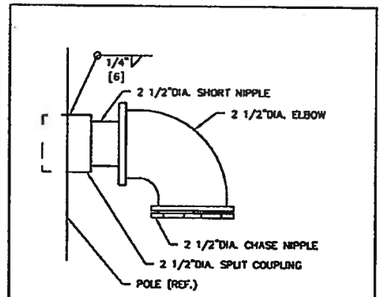

DETAIL "F" WIREWAY DETAIL

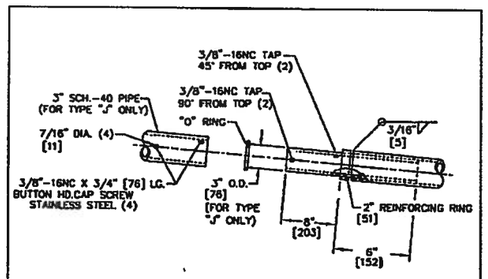

(TYPE "J"-FOR MOUNTING HEIGHTS ≥37.5 FT. [11.43] BUT <40 FT. [12.2] & WITH LUM. ARM LENGTH > 6 FT. [1.8])

DETAIL "G" LUMINAIRE CONNECTION

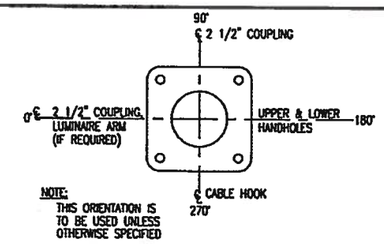

NOTE: THIS ORIENTATION IS TO BE USED UNLESS OTHERWISE SPECIFIED

ORIENTATION (TOP VIEW)

MATERIAL SPECIFICATION	
SHAFT	STEEL OF 48,000 P.S.I. MINIMUM YIELD AFTER FABRICATION ASTM A-572 GR.50 ASTM A-595 GR. A ASTM A-709 GR.50, ASTM A-1006 GR.50 ASTM A-1011 GR.50, ASTM A-1018 GR.50 THE ABOVE LISTED MATERIALS ARE USED BASED UPON AVAILABILITY AT TIME OF PURCHASE OF MATERIAL LOTS FOR PRODUCING POLE AND ARM SHAFTS
BASE PLATE	ASTM A-572 GR or A-709 GR.50
MISC. PLATE	ASTM A-36, A-709 GR or A-1011 MIN. YIELD 36KSI
PIPE	ASTM A-53 GRADE "B" OR ASTM A-500 GRADE "B"
ANCHOR BOLTS	ASTM F-1554 GR. 105
POLE FINISH	HOT DIP GALVANIZED PER ASTM A-123
HARDWARE FINISH	HOT DIP GALVANIZED PER ASTM A-153
WELDS LONGITUDINAL	BUTT WELD BY THE ELECTRICAL RESISTANCE PROCESS
WELDS CIRCUMFERENTIAL	BUTT WELD WITH PERMANENT BACK-UP RING (CONTINUOUS)

NOTES:

WELD: ALL BUTT WELDS TO BE GROUND FLUSH WITH BASE METAL.

WELDING OF STRUCTURES SHALL BE IN ACCORDANCE WITH THE LATEST EDITION OF THE AWS STRUCTURAL WELDING CODE D1.1 – STEEL LONGITUDINAL SEAM WELD IS 60% MIN. PENTRATION. EXCEPT FOR 6" FROM END OF SECTION AT FLANGE, BASEPLATE AND SLIP JOINT ARE 100% PENETRATION.

TOLERANCES:

TOLERANCES SHALL BE IN ACCORDANCE WITH SECTIONS 5.14.1 THROUGH 5.14.3 OF THE "SPECIFICATION FOR STRUCTURAL SUPPORTS OF HIGHWAY SIGNS, LUMINAIRES AND TRAFFIC SIGNALS" AASHTO 2009.

1. DIMENSIONS IN [ ] ARE METRIC. INCHES ARE CONVERTED TO MILLIMETERS, FEET TO METERS, AND POUNDS TO NEWTONS.
2. 37'-6" IS MIN. LUMINAIRE MOUNTING HEIGHT THAT CAN BE OBTAINED.
3. 3 1/2" SCH. 40 PIPE FOR LUM. ARMS 10'-0" [3] AND LESS 4" SCH. 40 PIPE FOR LUM. ARMS 12'-0" [3.7] AND LONGER.
4. 3" SCH. 40 PIPE FOR LUM. ARMS 10'-0" [3] AND LESS. 3 1/2" SCH. 40 PIPE FOR LUM. ARMS 12'-0" [3.7] AND LONGER.
5. CIRCUMFERENTIAL SPLICES WILL OCCUR APPROXIMATELY EVERY 10' IN MAIN SHAFT OF POLE SEE DETAIL "M," WHEN REQUIRED DUE TO MATERIAL AVAILABILITY.
6. CLAMPS ARE SIZED TO MOUNT BETWEEN 25' TO 29' FROM POLE BASE
7. WHEN NEEDED FOR GALVANIZE LIFTING PURPOSES, A HOLE WILL BE DRILL IN THE SMALL END OF SHAFT APPROXIMATELY 1" FROM END.
8. DESIGN IS IN ACCORDANCE TO 2001 AASHTO STANDARD SPECIFICATIONS FOR STRUCTURAL SUPPORT FOR HIGHWAY SIGNS, LUMINAIRES AND TRAFFIC SIGNALS FOR A 90 MPH WIND – 3 SEC. GUST – 50 YR. RECURRENCE INTERVAL.

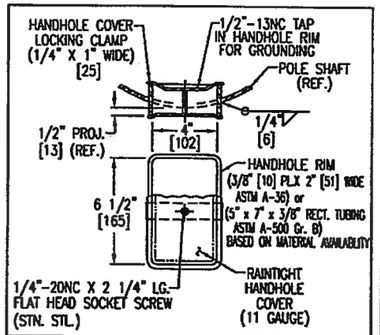

DETAIL "C" HANDHOLE DETAIL

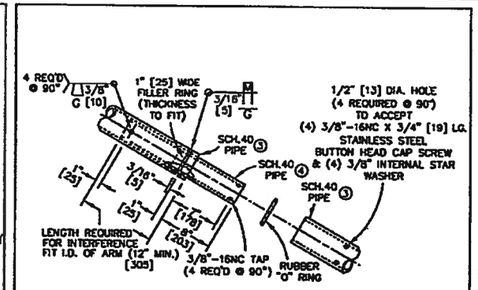

DETAIL "I" ARM CONNECTION (TYPE "T")

ITEM	QTY.	POLE CLASS	POLE SIZE BASE O.D. X TOP O.D.	SHAFT MATRL. .3125" THK.	BASE PLATE "B"	BASE PLATE "C"	BASE PLATE "D"	ANCHOR BOLTS DIA. X LENGTH	LUMINAIRE ARM TYPE "T" ONLY
			-- POLE DATA --						
		1900 LB. [8,452]	10 3/4" X 6 5/8" [273 X 168]	30'-0" [9.1]	15" [381]	15" [381]	1 1/2" [38]	1 1/4" X 36" [32 X 914]	3"
		2700 LB. [12,010]	12 1/8" X 8" [308 X 203]	30'-0" [9.1]	17" [432]	17" [432]	1 1/2" [38]	1 1/2" X 60" [38 X 1524]	
		3700 LB. [16,456]	13 1/2" X 9 3/8" [343 X 238]	30'-0" [9.1]	19" [483]	19" [483]	1 3/4" [44]	1 1/2" X 60" [38 X 1524]	
		4600 LB. [21,351]	14 7/8" X 10 3/4" [378 X 273]	30'-0" [9.1]	20" [508]	20" [508]	1 3/4" [44]	1 3/4" X 60" [44 X 1524]	6',8',10',12', 14', OR 16' (AS INDICATED ON MATERIAL LIST)
		5600 LB. [24,910]	14 7/8" X 10 3/4" [378 X 273]	30'-0" [9.1]	20" [508]	20" [508]	1 3/4" [44]	1 3/4" X 60" [44 X 1524]	
		6300 LB. [28,024]	16 1/4" X 12 1/8" [413 X 308]	*30'-0" [9.1]	22" [559]	22" [559]	2" [51]	1 3/4" X 66" [44 X 1676]	
		7200 LB. [32,027]	16 1/4" X 12 1/8" [413 X 308]	*30'-0" [9.1]	22" [508]	22" [559]	2" [51]	1 3/4" X 66" [44 X 1676]	

*16 1/4 x .3125 THK. SHAFT MATERIAL TO BE 55,000 PSI MINIMUM

TYPE "T" LUMINAIRE ARM DATA				
"C"	END O.D. X BASE O.D. X THK.	"R1"	"R2"	RISE
6'-0" [1.8]	2 3/8" X 4" X .120" [60 X 102 X 3]	7'-5" [2.3]	1'-0" [0.3]	3'-0" [0.9]
8'-0" [2.4]	2 3/8" X 4" X .120" [60 X 102 X 3]	7'-5" [2.3]	1'-0" [0.3]	4'-0" [1.2]
10'-0" [3.0]	2 3/8" X 4" X .120" [60 X 102 X 3]	7'-5" [2.3]	1'-0" [0.3]	5'-0" [1.5]
12'-0" [3.7]	2 3/8" X 4 1/2" X .120" [60 X 114 X 3]	7'-5" [2.3]	1'-3" [0.4]	6'-6" [2.0]
14'-0" [4.3]	2 3/8" X 4 1/2" X .120" [60 X 114 X 3]	7'-5" [2.3]	1'-3" [0.4]	7'-6" [2.3]
16'-0" [4.9]	2 3/8" X 4 1/2" X .120" [60 X 114 X 3]	7'-5" [2.3]	1'-3" [0.4]	8'-6" [2.6]

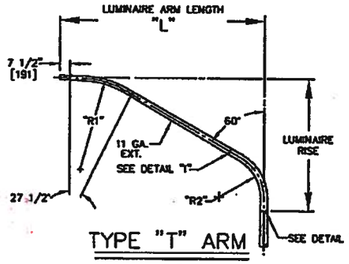

TYPE "T" ARM

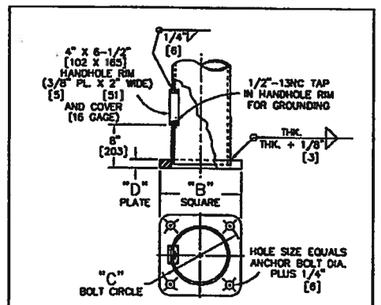

DETAIL "B" BASE DETAIL

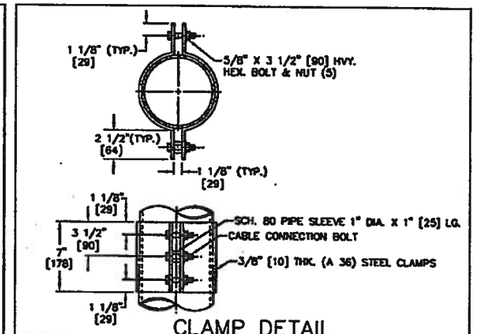

DETAIL "K" CLAMP DETAIL (2 CLAMPS REQUIRED PER POLE SEE NOTE 6)

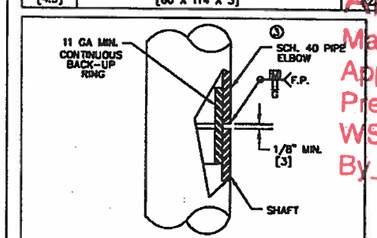

DETAIL "H" ELBOW CONNECTION

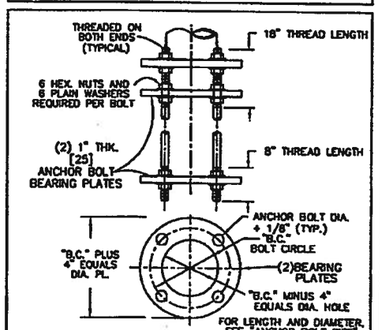

DETAIL "A" ANCHOR BOLT BOLTS TO BE GALVANIZED FULL LENGTH.

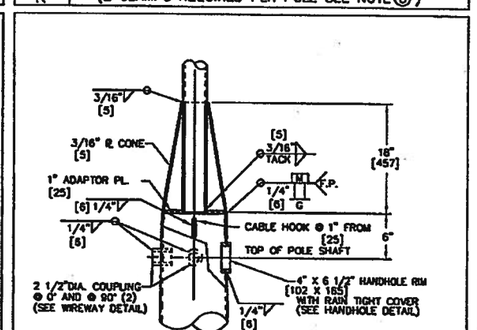

DETAIL "L" CONE DETAIL

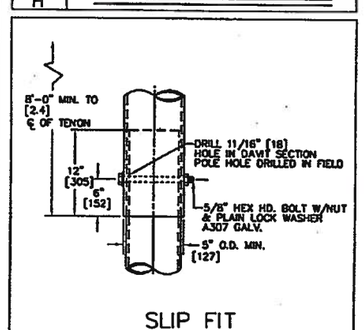

SLIP FIT CONNECTION DETAIL

DETAIL "J" (FOR MOUNTING HEIGHTS GREATER OR EQUAL TO 40'-0")

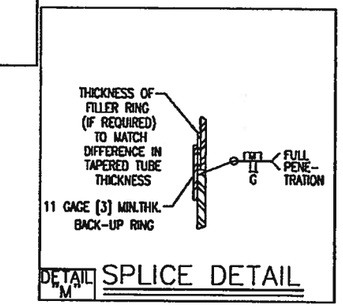

DETAIL "M" SPLICE DETAIL

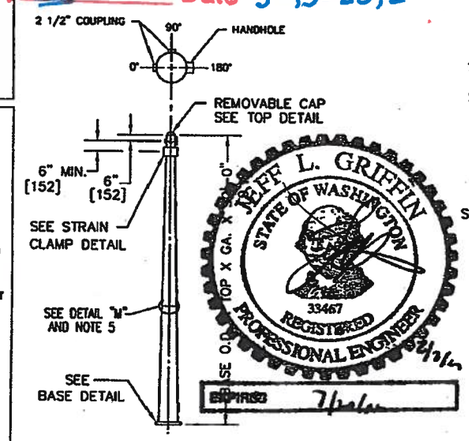

TYPE IV

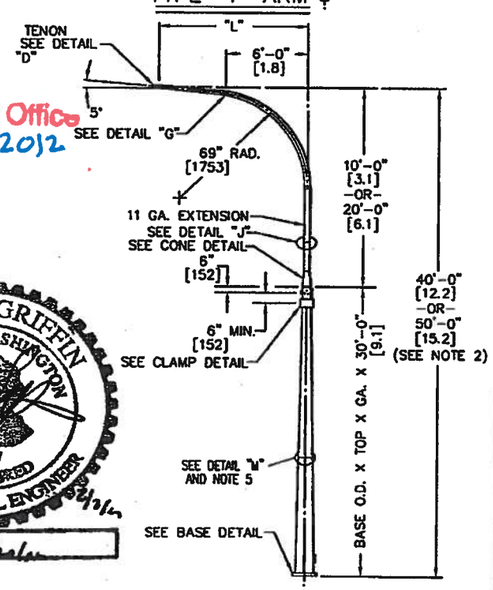

TYPE V

MATERIAL LIST	
QTY.	DESCRIPTION

AGENCY	
PROJECT	
DISTRIBUTOR	
CONTRACTOR	
CUSTOMER ORDER NO.	
AMERON NO.	

REV	DATE	DESCRIPTION	BY	APPR
G	12/11	REV.MISC	MHM	GM
F	11/11	REVISED NOTES & DETAIL "C"	GM	JB
E	11/11	ADD SPLICE DETAIL & NOTES 5 & 6	BB	GM
D	9/09	REV. PER STATE'S COMMENTS	BB	GM
C	9/09	REV. HANDHOLE TO RECT.	BB	GM

Ameron POLE PRODUCTS DIVISION

STATE OF WASHINGTON
STRAIN POLE STANDARD TYPE IV & V

THIS DOCUMENT CONTAINS INFORMATION WHICH IS PROPRIETARY TO AMERON, IT SHALL NOT BE REPRODUCED, USED OR DISCLOSED TO ANYONE WITHOUT THE PRIOR WRITTEN PERMISSION OF AMERON.

DRAWN: S.M.O.	DATE: 4/97	SCALE N.T.S.	DWG.NO. M3650	REV. G
APPR:	DATE:			

APPROVED
Manufacturer's Pole Plan
Approved For Listing As A
Pre-Approved Drawing
WSDOT Bridge & Structures Office
By GB Date 3-13-2012