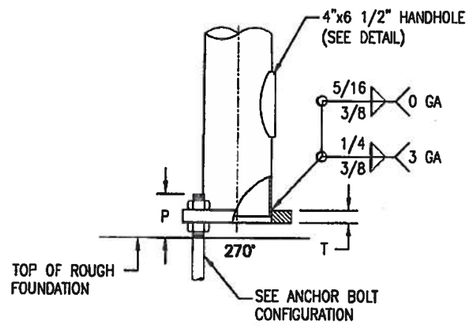

BASE CONNECTION DETAIL

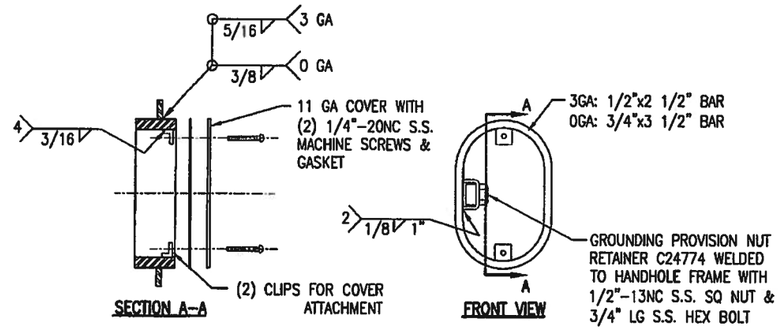

4" x 6 1/2" HANDHOLE FRAME DETAIL

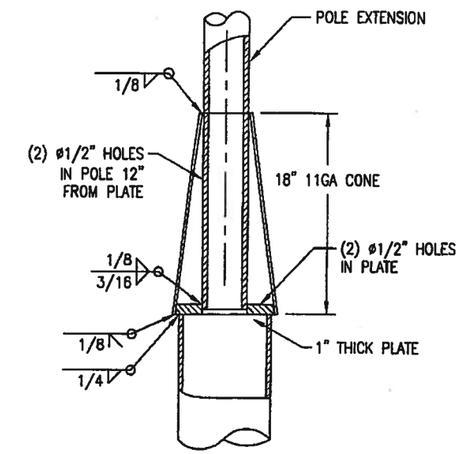

WELDED CONE DETAIL

APPROVED
Manufacturer's Pole Plan
Approved For Listing As A
Pre-Approved Drawing
WSDOT Bridge & Structures Office
By GB Date 10-4-2011

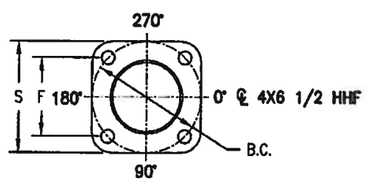

BASE PLATE DETAIL

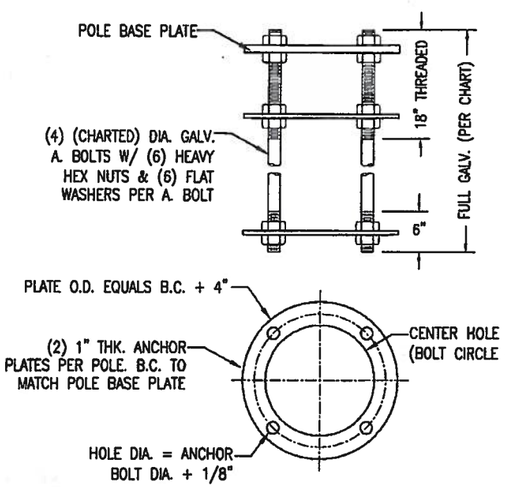

ANCHOR BOLT CONFIGURATION
(SHIPPED UNASSEMBLED)
(REF. B100-A354)

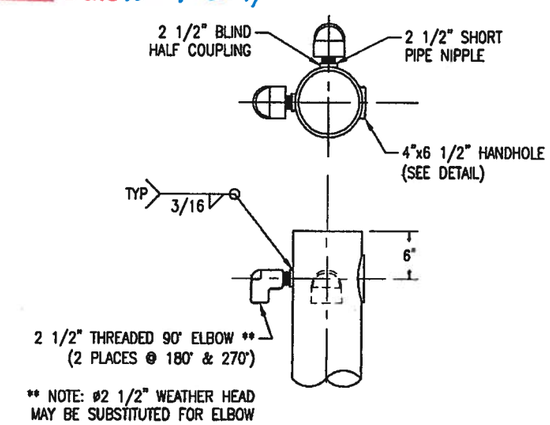

WIRE INLET DETAIL

STATE OF OHIO
PAUL E. HAIG
E-041183
10/3/11
REGISTERED
PROFESSIONAL ENGINEER

STATE: WASHINGTON	REQ# / SO# : 0332-06-95	REV	DESCRIPTION	DATE	REV BY / CHK BY
PROJECT NAME: –			REVISIONS		

ROUND TAPERED STEEL STRAIN POLE STANDARDS, TYPE 1 ARM
STATE OF WASHINGTON DOT

Union Metal Corporation

This document and the contents herein are proprietary and the property of Union Metal Corporation. This document is not to be, copied, reproduced, or used for any reason except for the purposes which it was issued without the express written consent of Union Metal Corporation. Furthermore Union Metal Corporation reserves the right to recall this document and all copies at any time for any reason.

DESIGNED BY	CHECKED BY	DATE	SCALE	ENG REF
TN	GMP	2/1/83	NTS	0408C95
EA-10225			REVISION R13	SHEET 2 OF 2

Hardcopies of this document are considered uncontrolled and are to be used for reference only. Those using this document must take all precautions available to ensure that this document matches the current revision maintained in digital format, within but a single source and protected by edit restrictions.