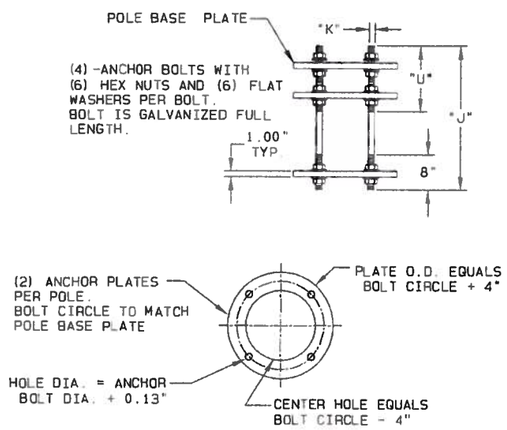

DETAIL 5 | ANCHOR BOLTS W/ANCHOR PLATES

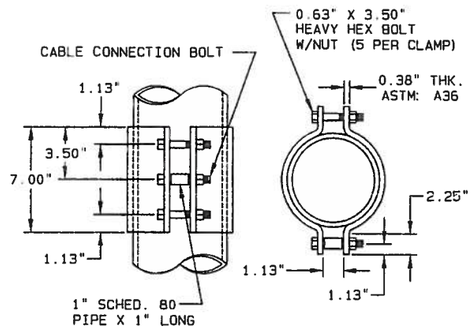

(1) CLAMP ASSEMBLIES FURNISHED PER POLE

DETAIL 6 | SPAN WIRE CLAMP

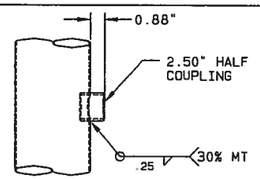

DETAIL 7 | WIREWAY

TABLE 3: DAVIT LUMINAIRE ARM DATA

SPAN (FT)	BASE O.D. (IN)	FREE END (IN)	LONG (FT)	GAUGE
6	5.41	3.77	11.66	11
8	5.41	3.52	13.50	11
10	5.41	3.26	15.33	11
12	5.41	3.00	17.16	11
14	5.41	2.75	19.00	11
16	5.41	2.40	21.50	11

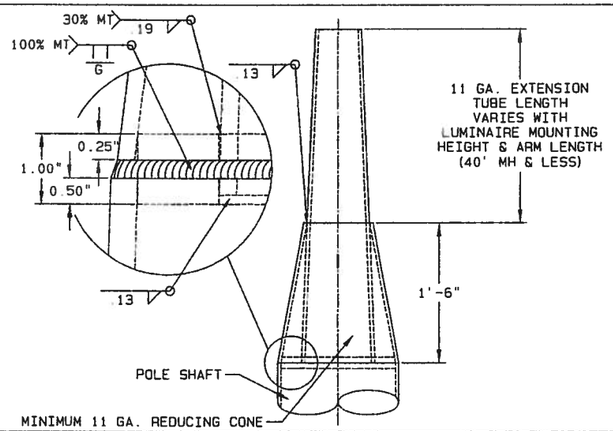

DETAIL 8 | LUMINAIRE CONE EXTENSION

NOTE: MATING SURFACES SHALL BE SMOOTH AND FREE OF BURRS, DENTS & LUMPS OF ZINC.

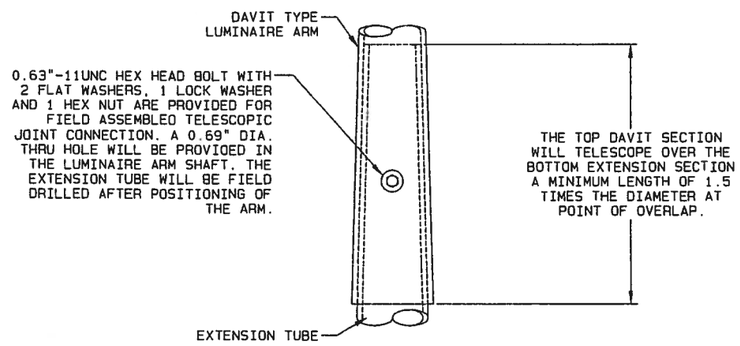

DETAIL 9 | DAVIT TYPE TELESCOPIC JOINT

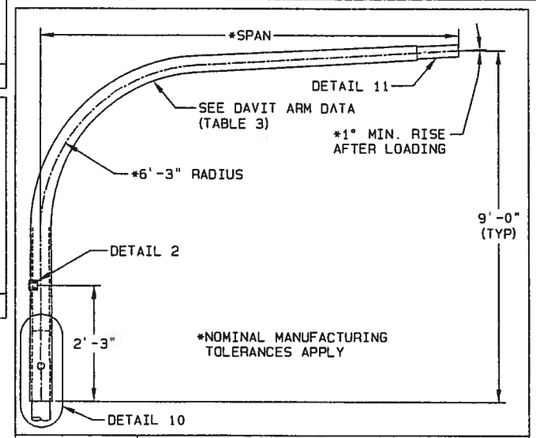

DETAIL 10 | DAVIT TYPE LUMINAIRE ARM

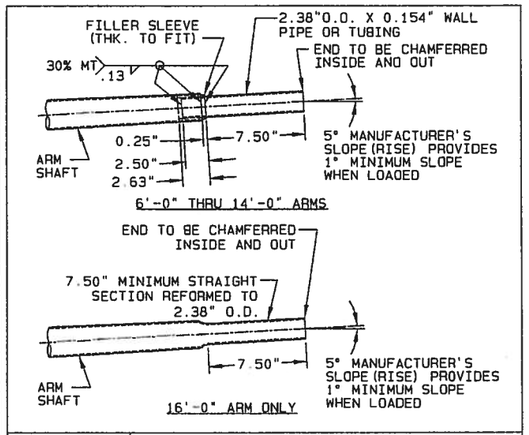

DETAIL 11 | SLIPFITTER

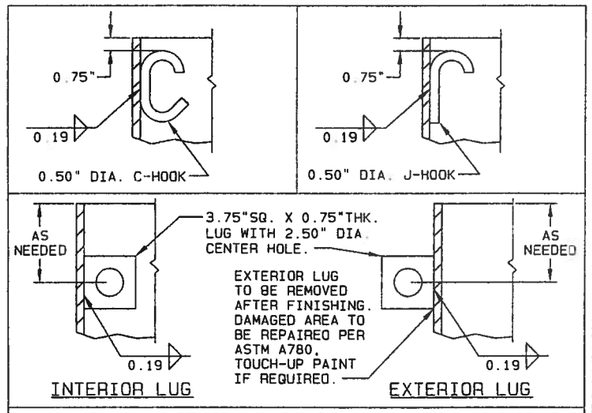

LUMINAIRE ARM - 0.75" DIA. HOLE, VISUALLY LOCATED AT END OF ARM

SIGNAL ARM - 1,000 LBS. OR LESS = (1) J-HOOK
1,001 LBS. THRU 2,000 LBS. = (2) J-HOOKS
OVER 2,000 LBS. = (1) LUG
END SECTION OF TWO PIECE ARM = (1) J-HOOK @ SMALL END OF ARM, (1) 0.75" DIA. HOLE @ LARGE END OF ARM

POLE - 1,000 LBS. OR LESS - (1) C-HOOK OR J-HOOK
1,001 LBS. THRU 2,000 LBS. - (2) C-HOOKS OR J-HOOKS
OVER 2,000 LBS. - (1) LUG

STANDARD MATERIAL HANGING ACCOMMODATIONS TO FACILITATE MANUFACTURING PROCESS

APPROVED
Manufacturer's Pole Plan
Approved For Listing As A
Pre-Approved Drawing
WSDOT Bridge & Structures Office
By GA Date 8-11-2011

STEPHEN R. OSBORN
STATE OF WASHINGTON
44852
REGISTERED
PROFESSIONAL ENGINEER
8/9/11

TITLE STATE OF WASHINGTON
STRAIN POLE STRUCTURES

VALMONT INDUSTRIES, INC. RESERVES THE RIGHT TO INSTALL VARIOUS, ENGINEER APPROVED, MATERIAL HANGING ACCOMMODATIONS TO FACILITATE THE MANUFACTURING PROCESS.

valmont
Valley, NE 68064
(402) 359-2201

DRAWING NUMBER DB00885 REV A