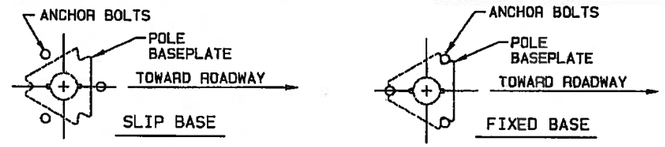

ANCHOR BOLT LAYOUT

NOTE:
1. BASEPLATE WITHOUT THE BOTTOM SLIP PLATE AND ANCHOR PLATE IS A FIXED BASE. WHERE A FIXED BASE IS REQUIRED BY PLANS OR SPECIAL PROVISIONS, ROTATE THE ANCHOR BOLT PATTERN 180° AND BOLT THE BASEPLATE DIRECTLY TO THE FOUNDATION.

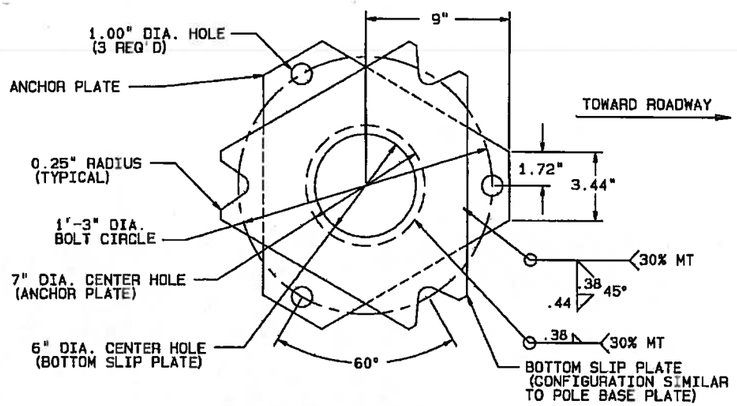

BOTTOM SLIP PLATE AND ANCHOR PLATE

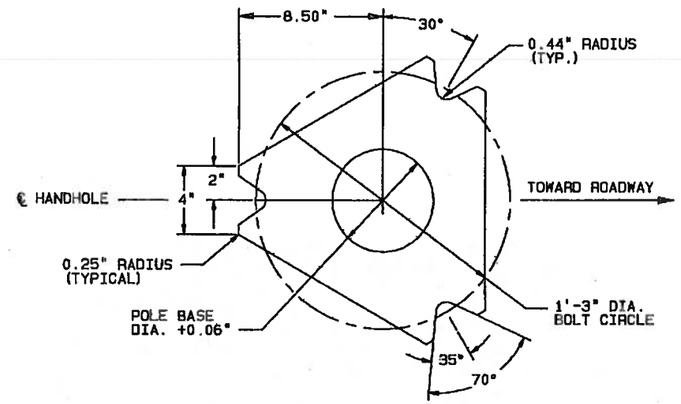

POLE BASE PLATE

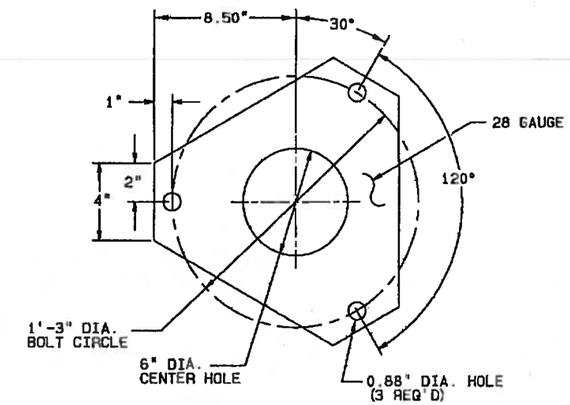

KEEPER PLATE

PLACE BETWEEN POLE BASE PLATE AND BOTTOM SLIP PLATE ON TOP OF MIDDLE WASHERS.

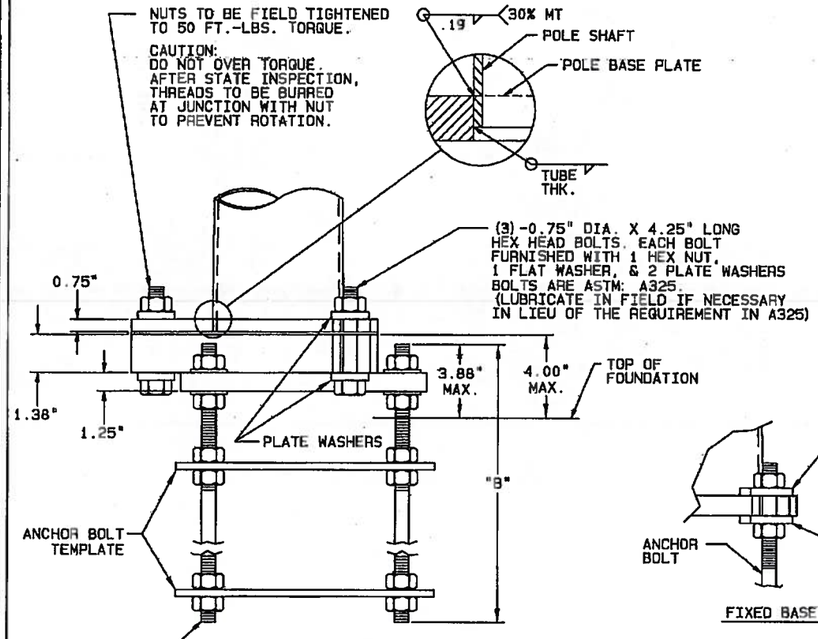

BREAKAWAY BASE ELEVATION

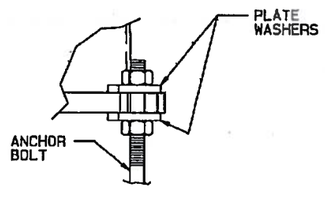

FIXED BASE

BREAKAWAY BASE DETAIL

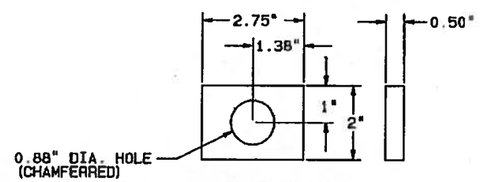

PLATE WASHER

NOTE:
THE SLIPBASE ASSEMBLY SHOWN CONFORMS TO THE BREAKAWAY CRITERIA SPECIFIED IN THE 2001 AASHTO STANDARD SPECIFICATIONS FOR STRUCTURAL SUPPORTS FOR HIGHWAY SIGNS, LUMINAIRES, AND TRAFFIC SIGNALS, AND HAS BEEN APPROVED BY THE FEDERAL HIGHWAY ADMINISTRATION (FHWA).

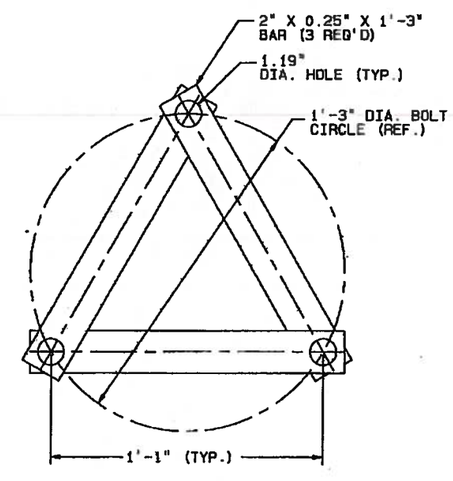

ANCHOR BOLT TEMPLATE

(2) TEMPLATES REQ'D PER POLE-STRAPS ARE SHIPPED LOOSE

APPROVED
Manufacturer's Pole Plan
Approved For Listing As A
Pre-Approved Drawing
WSDOT Bridge & Structures Office
By GB Date 1-22-2014

STEPHEN R. OSTERN
STATE OF WASHINGTON
44852
REGISTERED
PROFESSIONAL ENGINEER
1/14/14

TITLE
STATE OF WASHINGTON
PED POLES

VALMONT INDUSTRIES, INC. RESERVES THE RIGHT TO INSTALL VARIOUS, ENGINEER APPROVED, MATERIAL HANDLING ACCOMMODATIONS TO FACILITATE THE MANUFACTURING PROCESS.

valmont
Valley, NE 68064
(402) 359-2201

DRAWING NUMBER DB00655
REV K