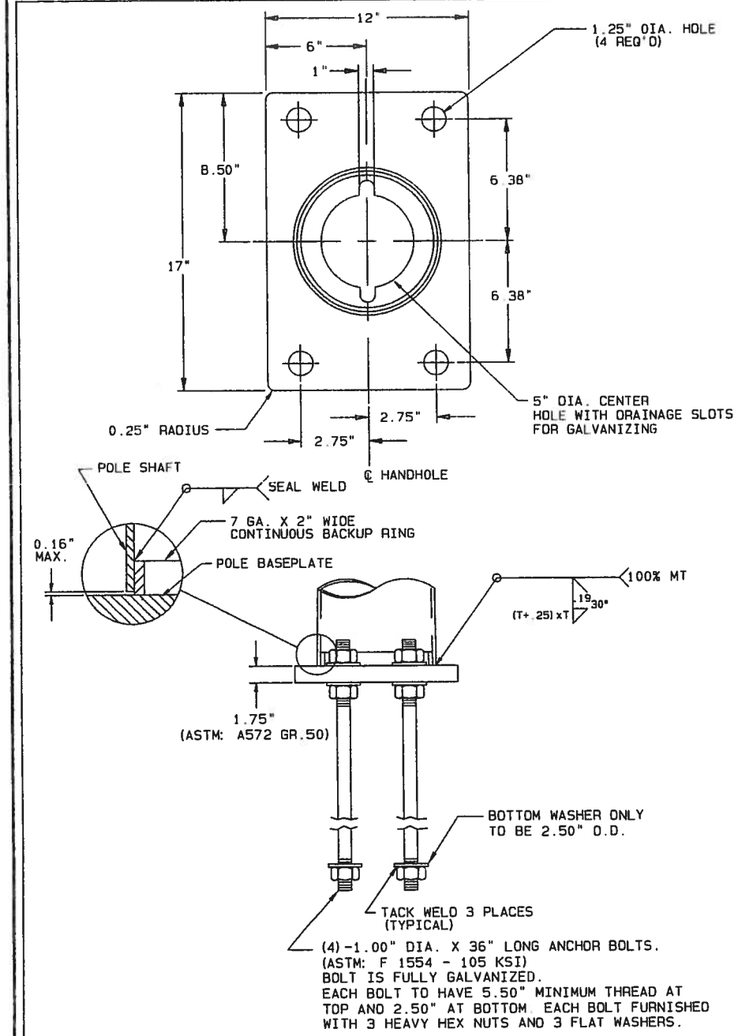

BARRIER BASE PLATE & ANCHOR BOLTS

SEE PAGES 1 & 2 FOR DATA AND DETAILS NOT ON THIS SHEET

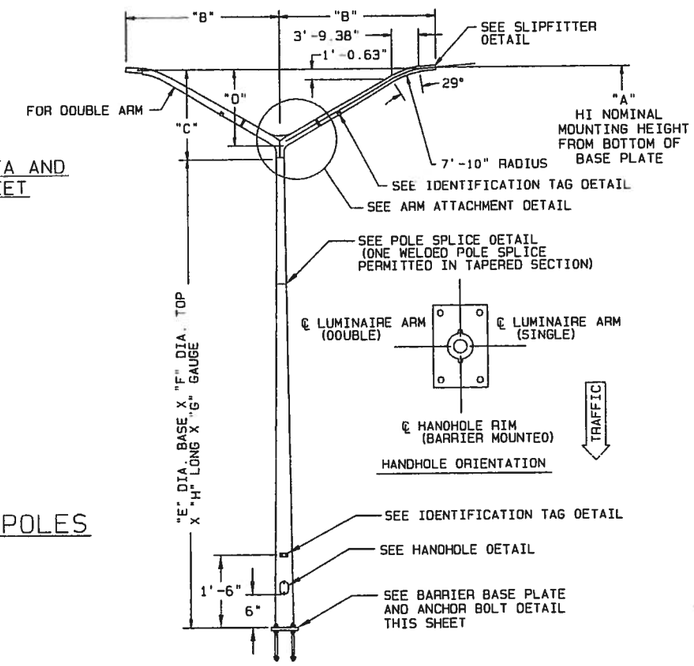

BARRIER MOUNTED POLES

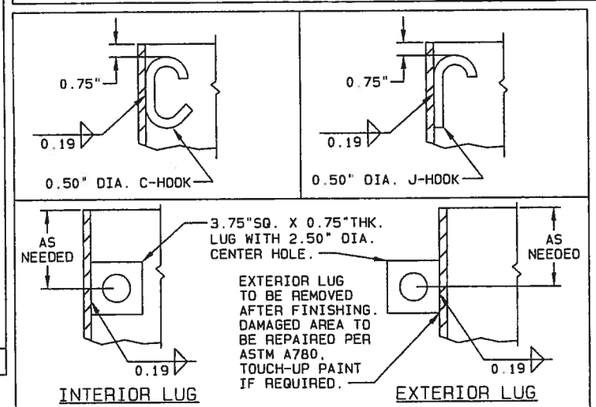

LUMINAIRE ARM - 0.75" DIA. HOLE, VISUALLY LOCATED AT END OF ARM

SIGNAL ARM - 1,000 LBS. OR LESS = (1) J-HOOK
1,001 LBS. THRU 2,000 LBS. = (2) J-HOOKS
OVER 2,000 LBS. = (1) LUG
END SECTION OF TWO PIECE ARM = (1) J-HOOK @ SMALL END OF ARM, (1) 0.75" DIA. HOLE @ LARGE END OF ARM

POLE - 1,000 LBS. OR LESS - (1) C-HOOK OR J-HOOK
1,001 LBS. THRU 2,000 LBS. - (2) C-HOOKS OR J-HOOKS
OVER 2,000 LBS. - (1) LUG

STANDARD MATERIAL HANGING ACCOMMODATIONS TO FACILITATE MANUFACTURING PROCESS

APPROVED
Manufacturer's Pole Plan
Approved For Listing As A
Pre-Approved Drawing
WSDOT Bridge & Structures Office
By GB Date 8-11-2011

STEPHEN R. OSBORN
STATE OF WASHINGTON
52
REGISTERED
PROFESSIONAL ENGINEER
8/9/11

TITLE			
STATE OF WASHINGTON TYPE 2 LIGHTING STRUCTURES	VALMONT INDUSTRIES, INC. RESERVES THE RIGHT TO INSTALL VARIOUS, ENGINEER APPROVED, MATERIAL HANGING ACCOMMODATIONS TO FACILITATE THE MANUFACTURING PROCESS.	valmont Valley, NE 68064 (402) 359-2201	PAGE NUMBER: 4 OF 4 DRAWING NUMBER DB00653 REV G