APPROVED
Manufacturer's Pole Plan
Approved For Listing As A
Pre-Approved Drawing
WSDOT Bridge & Structures Office
By GB Date 8-11-2011

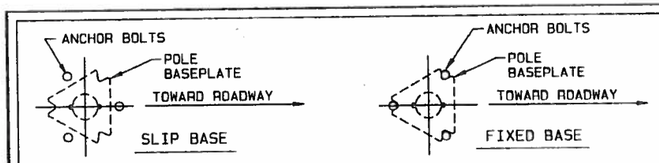

ANCHOR BOLT LAYOUT

NOTE:
1. BASEPLATE WITHOUT THE BOTTOM SLIP PLATE AND ANCHOR PLATE IS A FIXED BASE. WHERE A FIXED BASE IS REQUIRED BY PLANS OR SPECIAL PROVISIONS, ROTATE THE ANCHOR BOLT PATTERN 180° AND BOLT THE BASEPLATE DIRECTLY TO THE FOUNDATION.

DRAINAGE SLOT TABLE	
POLE I.D.	"X"
LESS THAN 8.00"	NO SLOT REQUIRED
8.00"-8.99"	0.50"
9.00"-9.99"	1.00"
10.00" +	1.50"

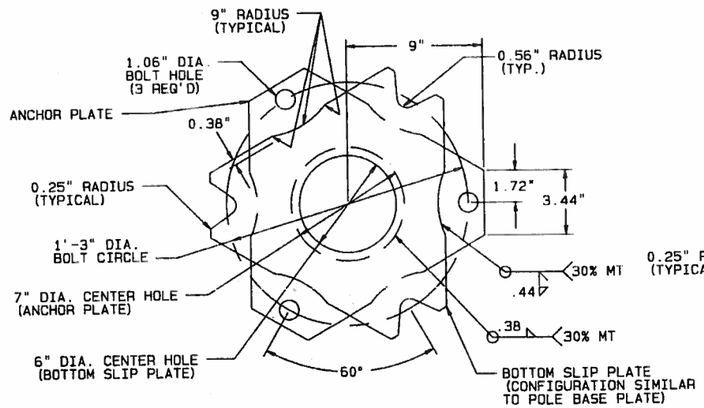

BOTTOM SLIP PLATE AND ANCHOR PLATE

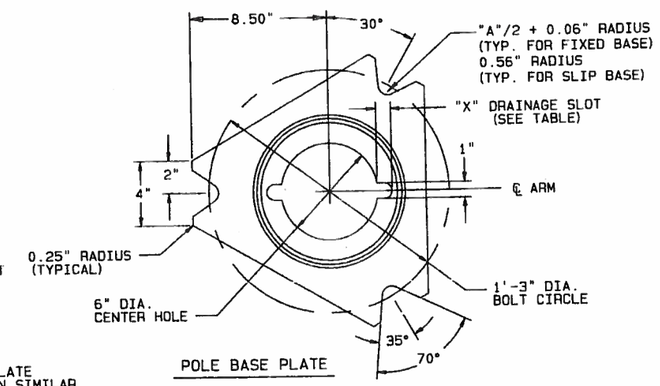

POLE BASE PLATE

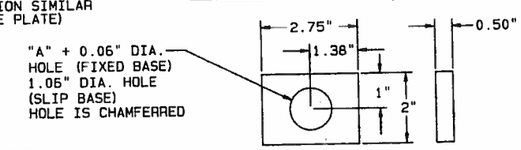

PLATE WASHER

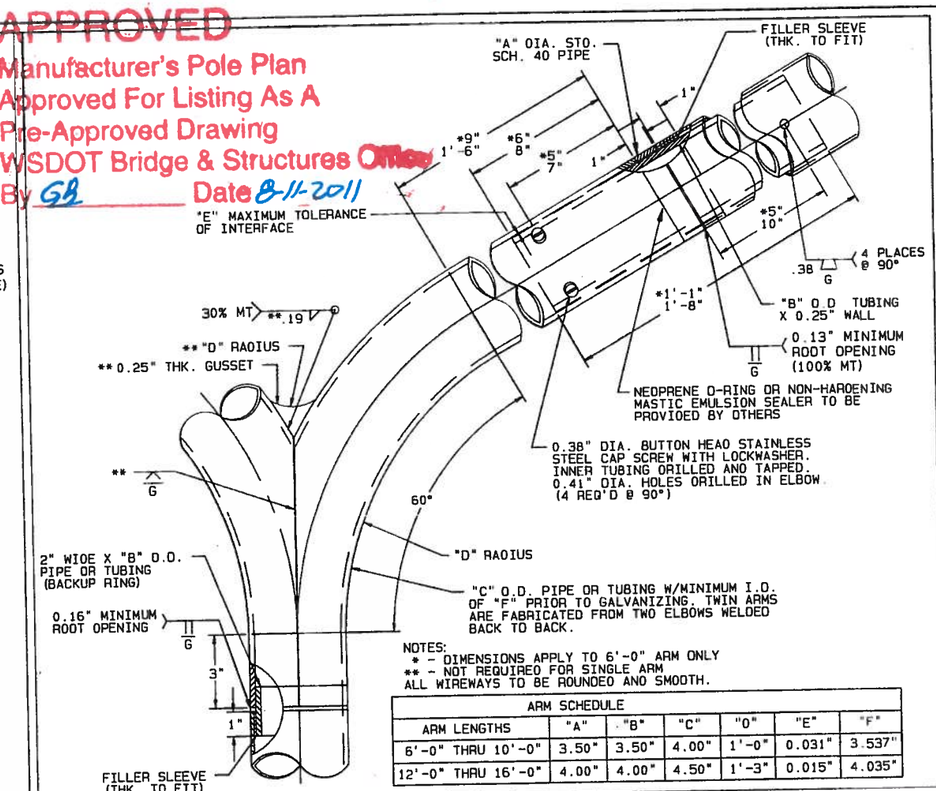

NOTES:
* - DIMENSIONS APPLY TO 6'-0" ARM ONLY
** - NOT REQUIRED FOR SINGLE ARM
ALL WIREWAYS TO BE ROUNDED AND SMOOTH.

ARM SCHEDULE						
ARM LENGTHS	"A"	"B"	"C"	"D"	"E"	"F"
6'-0" THRU 10'-0"	3.50"	3.50"	4.00"	1'-0"	0.031"	3.537"
12'-0" THRU 16'-0"	4.00"	4.00"	4.50"	1'-3"	0.015"	4.035"

ARM ATTACHMENT DETAIL

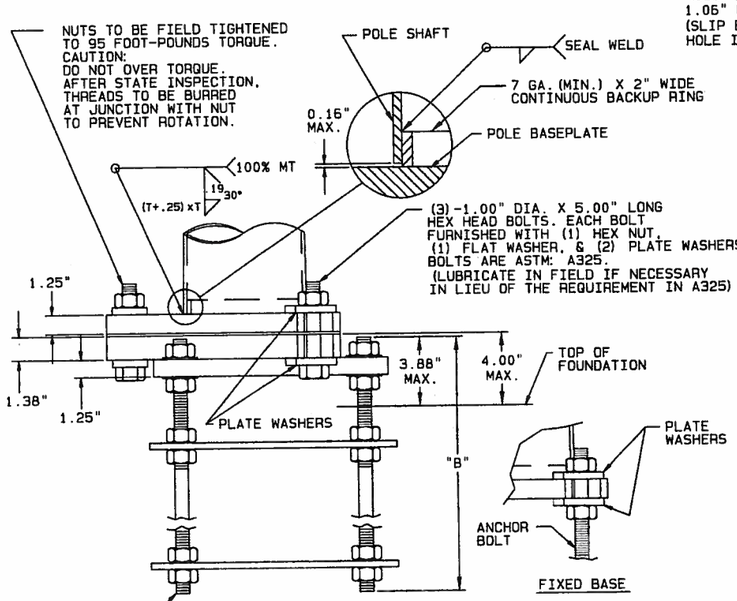

SLIP BASE ELEVATION

FIXED BASE

SLIP BASE/FIXED BASE DETAIL

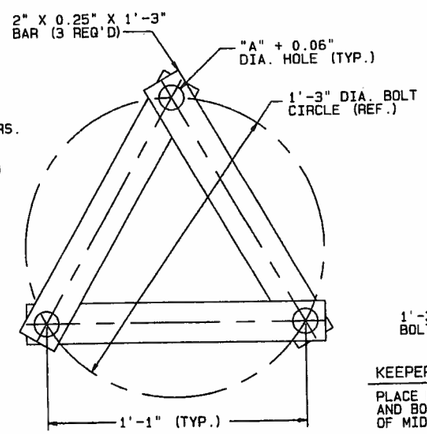

ANCHOR BOLT TEMPLATE
(2) TEMPLATES REQ'D PER POLE-STRAPS ARE SHIPPED LOOSE

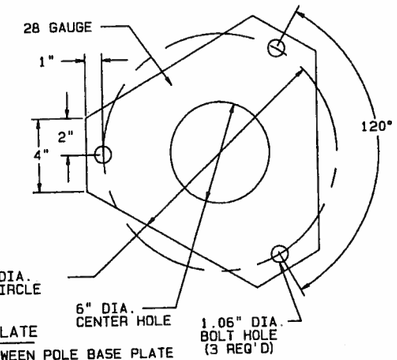

KEEPER PLATE
PLACE BETWEEN POLE BASE PLATE AND BOTTOM SLIP PLATE ON TOP OF MIDDLE WASHERS.

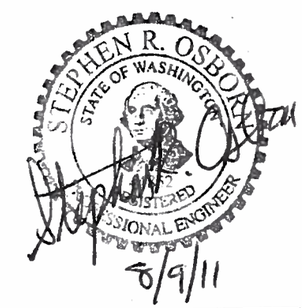

NOTE:
THE SLIPBASE ASSEMBLY SHOWN CONFORMS TO THE BREAKAWAY CRITERIA SPECIFIED IN THE 2009 AASHTO STANDARD SPECIFICATIONS FOR STRUCTURAL SUPPORTS FOR HIGHWAY SIGNS, LUMINAIRES, AND TRAFFIC SIGNALS, AND HAS BEEN APPROVED BY THE FEDERAL HIGHWAY ADMINISTRATION (FHWA).

SLIP BASE TABLE		
LUMINAIRE HEIGHT (H1)	ARM TYPE	ARM LENGTH
20'-0" THRU 50'-0"	SINGLE	6'-0" THRU 16'-0"
20'-0" THRU 45'-0"	DOUBLE	6'-0" THRU 8'-0"
POLES THAT EXCEED THE ABOVE SHALL NOT BE INSTALLED ON A SLIP BASE.		

ANCHOR BOLT TABLE			
LUMINAIRE HEIGHT (H1)	ARM TYPE	ARM LENGTH	ANCHOR BOLT "A" DIA. X "B" LENGTH
20'-0" THRU 50'-0"	SINGLE	6'-0" THRU 16'-0"	1.00" X 4'-6"
20'-0" THRU 50'-0"	DOUBLE	6'-0" THRU 8'-0"	1.00" X 4'-6"
20'-0" THRU 45'-0"	DOUBLE	10'-0" THRU 16'-0"	1.00" X 4'-6"
46'-0" THRU 50'-0"	DOUBLE	10'-0" THRU 16'-0"	1.13" X 5'-6"

TITLE
STATE OF WASHINGTON
TYPE 2 LIGHTING STRUCTURES

VALMONT INDUSTRIES, INC. RESERVES THE RIGHT TO INSTALL VARIOUS, ENGINEER APPROVED, MATERIAL HANDLING ACCOMMODATIONS TO FACILITATE THE MANUFACTURING PROCESS.

valmont
Valley, NE 68064
(402) 359-2201

DRAWING NUMBER DB00653
REV G