APPROVED
Manufacturer's Pole Plan
Approved For Listing As A
Pre-Approved Drawing
WSDOT Bridge & Structures Office
By GB Date 8-11-2011

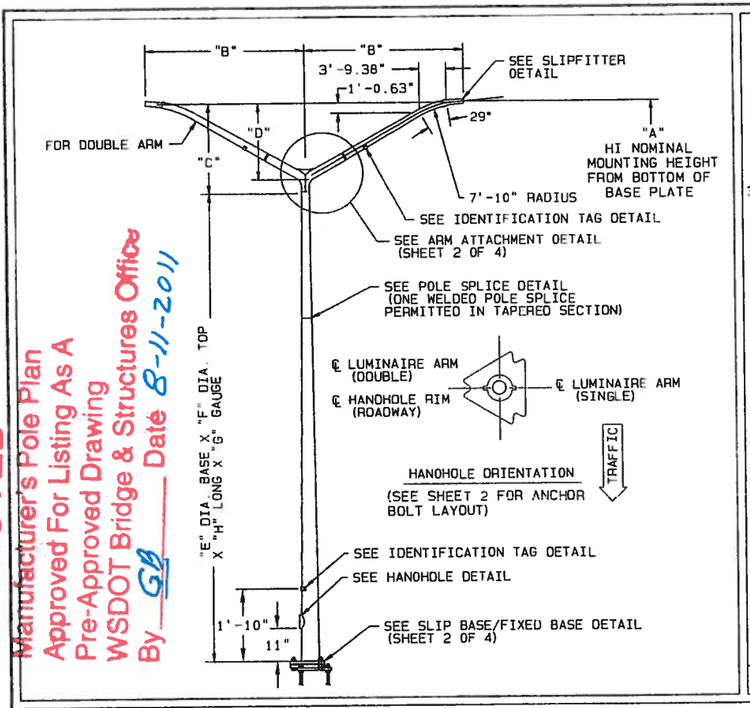

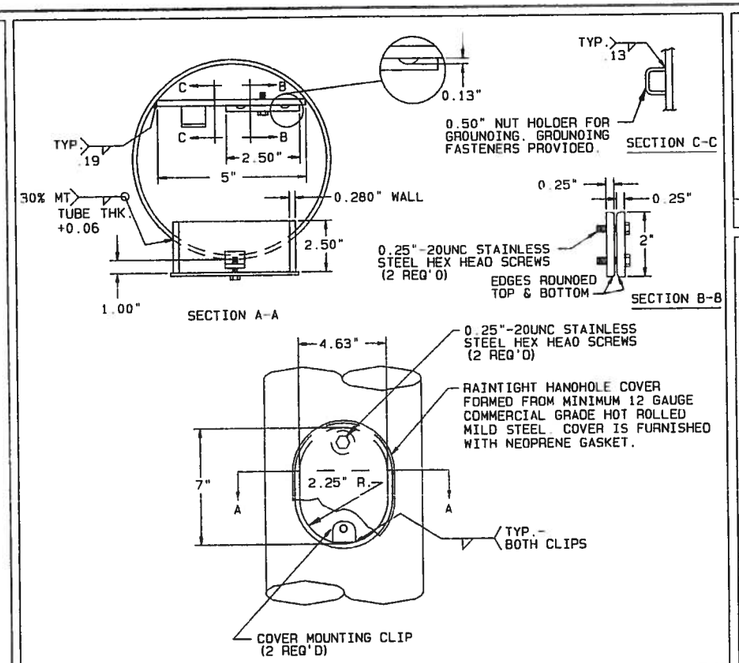

HANDHOLE DETAIL

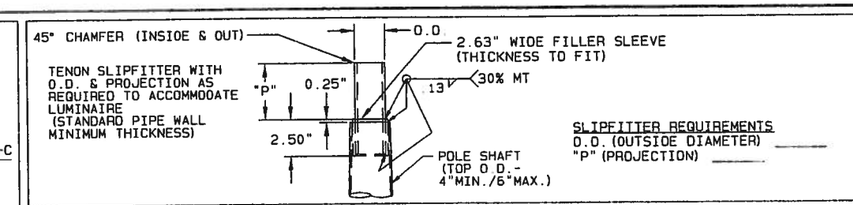

NO MAST ARM

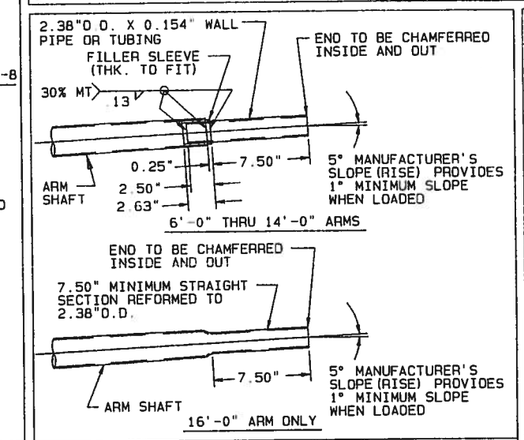

SLIPFITTER DETAIL

MATERIAL DATA

COMPONENT	ASTM DESIGNATION	MIN. YIELD (KSI)
POLE & ARM SHAFTS	A595 GR.A	55
BASE PLATE	A572 GR.50	50
BOTTOM SLIP PLATE	A572 GR.50	50
ANCHOR PLATE	A572 GR.50	50
PLATE WASHERS	A36 OR A572 GR. 50	36 50
KEEPER PLT-G90 COATING	A653 GR.33	
HANDHOLE RIM	A500 GR.B	42
STRUCTURAL CONN. HDWE	A325	
ANCHOR BOLTS NUTS WASHERS	F1554 A563 GR.DH F436	105
BRNG PLT & STRAPS	A36 OR A572 GR. 50	36 50
MISC. HARDWARE-SERIES 300 STAINLESS		
OTHER PLATES	A36 OR A572 GR. 50	36 50
TUBING	A501	36
	A513	35
	A618	50
	A500 GR.B	42
PIPE	A53 GR.B	35
GALVANIZING - STRUCTURE	A123	
GALVANIZING - HARDWARE	F2329	
ARM ELBOW	A513 TYPE 5 GR.1026	45

PLEASE PROVIDE ID TAG STAMPING REQUIREMENTS

PLEASE PROVIDE SLIPFITTER REQUIREMENTS IF APPLICABLE

S = SINGLE ARM (D) = DOUBLE ARM

POLE AND ARM DATA

QTY.	CATALOG DESCRIPTION	HI NOMINAL MOUNTING HEIGHT (±0'-6") "A"	ARM DESCRIPTION: ARM LENGTH "B"	ARM RISE "C"	ARM RISE "D"	POLE DESCRIPTION: BASE O.D. "E"	TOP O.D. "F"	SHAFT LENGTH "H"	WALL GAUGE "G"
	DS99-WA-6S (D) -30	30'-0"	6'-0"	2'-10"	1'-11.75"	7.80"	4.00"	27'-2"	11
	DS99-WA-8S (D) -30	30'-0"	8'-0"	4'-0"	3'-1.50"	7.64"	4.00"	26'-0"	11
	DS99-WA-10S (D) -30	30'-0"	10'-0"	5'-1"	4'-3.38"	7.49"	4.00"	24'-11"	11
	DS99-WA-12S (D) -30	30'-0"	12'-0"	6'-5"	5'-5.25"	7.80"	4.50"	23'-7"	11
	DS99-WA-14S (D) -30	30'-0"	14'-0"	5'-1"	4'-1.13"	7.99"	4.50"	24'-11"	11
	DS99-WA-16S (D) -30	30'-0"	16'-0"	6'-4"	5'-4"	7.81"	4.50"	23'-8"	11
	DS210-WA-0-30	30'-0"	NO MAST ARM			8.20"	4.00"	30'-0"	11
	DS99-WA-6S (D) -35	35'-0"	6'-0"	2'-10"	1'-11.75"	8.50"	4.00"	32'-2"	11
	DS99-WA-8S (D) -35	35'-0"	8'-0"	4'-0"	3'-1.50"	8.34"	4.00"	31'-0"	11
	DS99-WA-10S (D) -35	35'-0"	10'-0"	5'-1"	4'-3.38"	8.19"	4.00"	29'-11"	11
	DS99-WA-12S (D) -35	35'-0"	12'-0"	6'-5"	5'-5.25"	8.50"	4.50"	28'-7"	11
	DS99-WA-14S (D) -35	35'-0"	14'-0"	7'-7"	6'-7.13"	8.34"	4.50"	27'-5"	11
	DS99-WA-16S (D) -35	35'-0"	16'-0"	8'-9"	7'-9"	8.18"	4.50"	26'-3"	11
	DS210-WA-0-35	35'-0"	NO MAST ARM			8.90"	4.00"	35'-0"	11
	DS99-WA-6S (D) -40	40'-0"	6'-0"	2'-10"	1'-11.75"	9.20"	4.00"	37'-2"	11
	DS99-WA-8S (D) -40	40'-0"	8'-0"	4'-0"	3'-1.50"	9.04"	4.00"	36'-0"	11
	DS99-WA-10S (D) -40	40'-0"	10'-0"	5'-1"	4'-3.38"	8.89"	4.00"	34'-11"	11
	DS99-WA-12S (D) -40	40'-0"	12'-0"	6'-5"	5'-5.25"	9.20"	4.50"	33'-7"	11
	DS99-WA-14S (D) -40	40'-0"	14'-0"	7'-7"	6'-7.13"	9.04"	4.50"	32'-5"	11
	DS99-WA-16S (D) -40	40'-0"	16'-0"	8'-9"	7'-9"	8.88"	4.50"	31'-3"	11
	DS210-WA-0-40	40'-0"	NO MAST RAM			9.60"	4.00"	40'-0"	11
	DS99-WA-6S (D) -50	50'-0"	6'-0"	2'-10"	1'-11.75"	10.60"	4.00"	47'-2"	10
	DS99-WA-8S (D) -50	50'-0"	8'-0"	4'-0"	3'-1.50"	10.44"	4.00"	46'-0"	10
	DS99-WA-10S (D) -50	50'-0"	10'-0"	5'-1"	4'-4.38"	10.29"	4.00"	44'-11"	10
	DS99-WA-12S (D) -50	50'-0"	12'-0"	6'-5"	5'-5.25"	10.60"	4.50"	43'-7"	10
	DS99-WA-14S (D) -50	50'-0"	14'-0"	7'-7"	6'-7.13"	10.44"	4.50"	42'-5"	10
	DS99-WA-16S (D) -50	50'-0"	16'-0"	8'-9"	7'-9"	10.28"	4.50"	41'-3"	10
	DS210-WA-0-50	50'-0"	NO MAST ARM			11.00"	4.00"	50'-0"	10

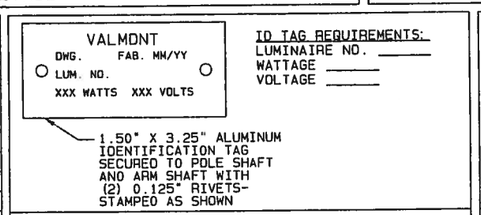

ID TAG REQUIREMENTS:
LUMINAIRE NO. _____
WATTAGE _____
VOLTAGE _____

IDENTIFICATION TAG DETAIL

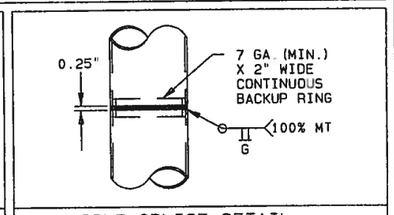

POLE SPLICE DETAIL

NOTES:
1. 2009 AASHTO STANDARD SPECIFICATIONS FOR STRUCTURAL SUPPORTS FOR HIGHWAY SIGNS, LUMINAIRES, AND TRAFFIC SIGNALS.
2. 90 MPH - DESIGN WIND SPEED
3. 3.3 SQ. FT./50 LBS. - DESIGN LUMINAIRE PA/WT
4. IN THE POLE AND ARM DATA, WALL GAUGE "G" WILL CHANGE WHEN THE MOUNTING HEIGHT REQUIRED ADJUSTS THE BASE O.D. "E" TO THE FOLLOWING:
   A. 10.00" OR LESS - WALL GAUGE WILL BE 11 GA.
   B. 10.01" THRU 11.00" - WALL GAUGE WILL BE 10 GA.
   THE WALL GAUGE "G" WILL REMAIN THE SAME FOR BOTH THE SINGLE AND DOUBLE ARM CONDITIONS.
5. THE ALLOWABLE MAXIMUM SIGN AREA LOCATED 7'-0" ABOVE THE POLE BASE WILL BE 20 SQ. FT. FOR ALL ARMS AND ALL MOUNTING HEIGHTS REQUIRED EXCEPT THE FOLLOWING:
   A. IF DOUBLE 16'-0" ARMS ARE REQUIRED FOR 40'-0" MOUNTING HEIGHT WHICH WOULD ADJUST THE BASE O.D. "E" TO 10.00" OR LESS WITH 11 GAUGE WALL.
6. THE H1 DIMENSION SHALL NOT EXCEED 50'-0".
7. SLIP BASES SHALL NOT BE INSTALLED ON POLES WEIGHING MORE THAN 1000 LBS.
8. LONGITUDINAL WELD SEAM:
   WELDING PROCESS:
   HIGH FREQUENCY ELECTRIC RESISTANCE WELD.

   WELD INSPECTION:
   ALL LONGITUDINAL SEAM WELDS SHALL BE INSPECTED BY MAGNETIC PARTICLE METHOD FOR 30% OF LENGTH EXCEPT FOR SHAFT THICKNESS OVER 0.3125 TO BE ULTRASONIC METHOD.

   WELDING:
   WELDING OF STRUCTURES SHALL BE IN ACCORDANCE WITH LATEST OF THE AWS STRUCTURAL WELDING CODE D1.1-STEEL. LONGITUDINAL SEAM WELD IS 60% MINIMUM PENETRATION EXCEPT 100% PENETRATION FOR 6 INCHES FROM END OF SECTION AT FLANGE PLATE OR BASEPLATE OR SPLICE.

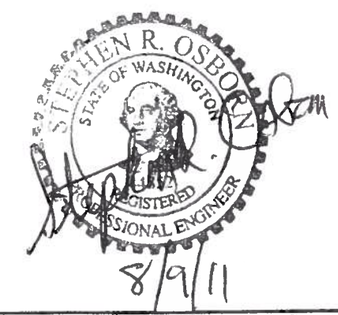

REV	DRAWN BY-DATE	CHECK BY-DATE	DESCRIPTION
G	BDB3 06/10/11	BDB3 06/10/11	ADD ANCHOR BOLT NUT & WASHER MATERIAL DATA
F	RDS9 02/15/11	RDS9 02/15/11	REVISED NOTES
E	BDB3 08/06/10	BDB3 08/06/10	UPDATED TO 2009 AASHTO
—	JKC 04/30/03	JKC 04/30/03	— — — — — — — — — — — — — — — — — — — —

TITLE: STATE OF WASHINGTON
TYPE 2 LIGHTING STRUCTURES

VALMONT INDUSTRIES, INC. RESERVES THE RIGHT TO INSTALL VARIOUS, ENGINEER APPROVED, MATERIAL HANGING ACCOMMODATIONS TO FACILITATE THE MANUFACTURING PROCESS.

valmont
Valley, NE 68064
(402) 359-2201

DRAWING NUMBER: DB00653
REV: G