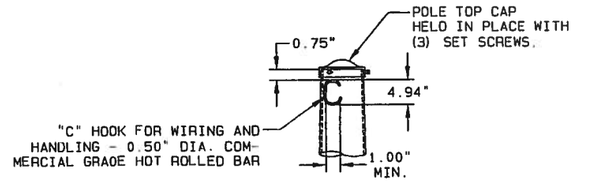

DETAIL 1 — POLE TOP

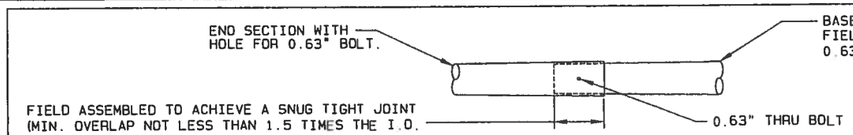

DESIGN NOTE: IN APPLICATIONS WHERE A SIGNAL TENON IS LOCATED IN THE "AS DESIGNED MAXIMUM SLIPFIT" AREA, A SPECIAL DESIGN "SD" MAST ARM WILL BE REQUIRED.

FOR SIGNAL ARM LENGTHS OVER 51'-0" ONLY

ARM SPAN (FT)	BASE SECTION			END SECTION			AS DESIGNED MAXIMUM SLIPFIT (IN)
	SMALL END O.D. (IN)	LENGTH (FT)	GAUGE OR THK. (IN)	LARGE END O.D. (IN)	LENGTH (FT)	GAUGE OR THK. (IN)	
51.00 - 55.00	11.25	12.50	5 GA.	11.97	41.05 - 45.05	7 GA.	36.79
56.00 - 65.00	12.27	19.50	0.250	13.00	39.18 - 48.18	7 GA.	38.33

DETAIL 4 — SIGNAL ARM SLIP JOINT

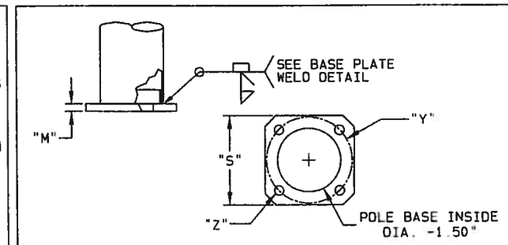

DETAIL 7 — POLE BASE

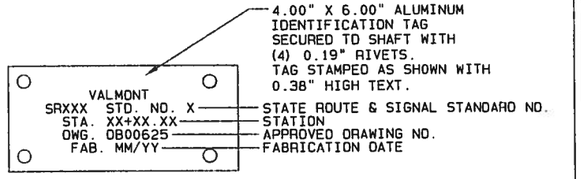

POLE SHAFT: LOCATED AS SHOWN ON PAGE 1 OF 3.

SINGLE PIECE MAST ARM: LOCATED 6" FROM BASE END ON BOTTOM ℄.

TWO PIECE MAST ARM: BASE SECTION - LOCATED 6" FROM BASE END ON BOTTOM ℄.
END SECTION - LOCATED 6" FROM SMALL END ON BOTTOM ℄.

LUMINAIRE ARM: LOCATED AS SHOWN ON DETAILS 12 & 13, PAGE 3 OF 3.

DETAIL 2 — IDENTIFICATION TAG

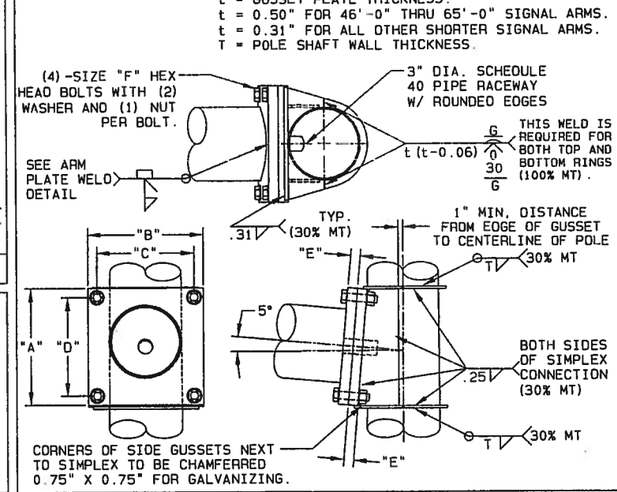

DETAIL 5 — SIGNAL ARM ATTACHMENT

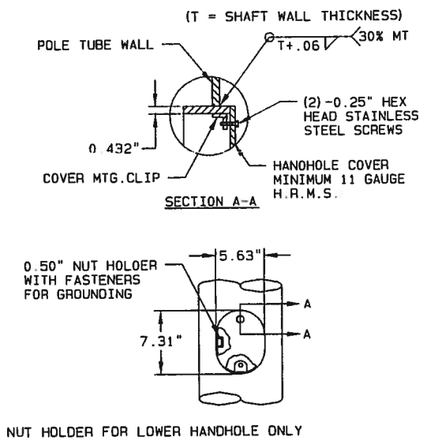

DETAIL 6 — HANDHOLE

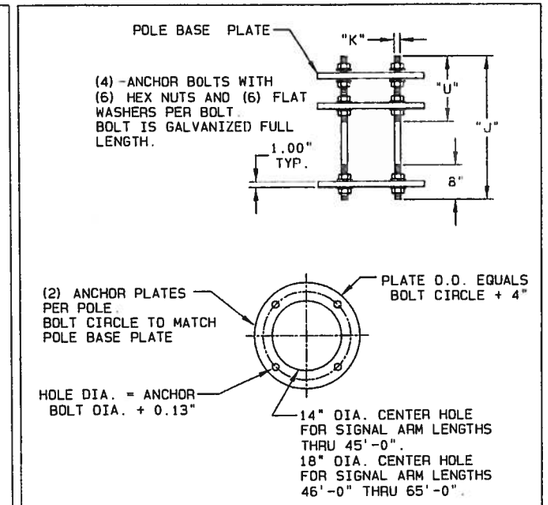

DETAIL 8 — ANCHOR BOLTS W/ANCHOR PLATES

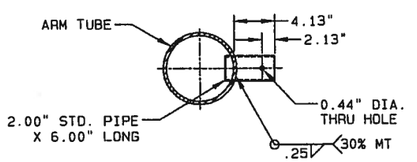

DETAIL 3 — SIGNAL ARM TENON

TABLE 2: POLE AND SIGNAL ARM DATA

POLE CLASS	POLE TUBE				BASE PLATE				ANCHOR BOLT				SIGNAL ARM TUBE				SIGNAL ARM ATTACHMENT DATA						X Y Z (FT³)
	BASE DIA. (IN)	TOP DIA. (IN)	MAX. LENGTH (FT)	GAUGE OR THICK (IN)	SQUARE "S" (IN)	BOLT CIRCLE "Y" (IN)	THK. "M" (IN)	HOLE "Z" (IN)	DIA. "K" (IN)	LENGTH "J" (IN)	ANCHOR PLATE O.D. (IN)	THREAD LENGTH "U" (IN)	FIXED END DIA. (IN)	FREE END DIA. (IN)	GAUGE OR THICK (IN)	SPAN (FT)	"A" (IN)	"B" (IN)	"C" (IN)	"D" (IN)	"E" (IN)	"F" (IN)	
TYPE II	13.50	10.49	21.50	0.313	18.50	18.00	1.500	1.75	1.50	60.00	22.00	18.00	7.00	THRU 3.50	7	THRU 25	20.25	20.25	16.50	16.50	1.750	1.50-6UNC X 6.00	566
TYPE II	13.50	10.49	21.50	0.313	18.50	18.00	1.500	1.75	1.50	60.00	22.00	18.00	10.00	6.36-5.10	7	26-35	20.25	20.25	16.50	16.50	1.750	1.50-6UNC X 6.00	1105
TYPE II	13.50	10.49	21.50	0.313	18.50	18.00	1.500	1.75	1.50	60.00	22.00	18.00	11.00	5.96-4.70	7	36-45	20.25	20.25	16.50	16.50	1.750	1.50-6UNC X 6.00	1531
TYPE II	16.00	12.99	21.50	0.375	22.50	22.00	2.000	2.25	2.00	60.00	26.00	18.00	13.00	6.56-6.00	7	46-50	23.75	23.75	20.00	20.00	2.000	1.50-6UNC X 6.50	1957
TYPE II	16.00	12.99	21.50	0.375	22.50	22.00	2.000	2.25	2.00	60.00	26.00	18.00	13.00	6.18-5.30	DET.4	51-55	23.75	23.75	20.00	20.00	2.000	1.50-6UNC X 6.50	1957
TYPE II	16.25	13.24	21.50	0.375	22.50	22.00	2.000	2.25	2.00	60.00	26.00	18.00	15.00	7.16-5.90	DET.4	56-65	23.75	23.75	20.00	20.00	2.000	1.50-6UNC X 6.50	2894
TYPE III	13.50	10.42	22.00	0.313	18.50	18.00	1.500	1.75	1.50	60.00	22.00	18.00	7.00	THRU 3.50	7	THRU 25	20.25	20.25	16.50	16.50	1.750	1.50-6UNC X 6.00	623
TYPE III	13.50	10.42	22.00	0.313	18.50	18.00	1.500	1.75	1.50	60.00	22.00	18.00	10.00	6.36-5.10	7	26-35	20.25	20.25	16.50	16.50	1.750	1.50-6UNC X 6.00	1161
TYPE III	13.50	10.42	22.00	0.313	18.50	18.00	1.500	1.75	1.50	60.00	22.00	18.00	11.00	5.96-4.70	7	36-45	20.25	20.25	16.50	16.50	1.750	1.50-6UNC X 6.00	1587
TYPE III	16.00	12.92	22.00	0.375	22.50	22.00	2.000	2.25	2.00	60.00	26.00	18.00	13.00	6.56-6.00	7	46-50	23.75	23.75	20.00	20.00	2.000	1.50-6UNC X 6.50	2600
TYPE III	16.00	12.92	22.00	0.375	22.50	22.00	2.000	2.25	2.00	60.00	26.00	18.00	13.00	6.18-5.30	DET.4	51-55	23.75	23.75	20.00	20.00	2.000	1.50-6UNC X 6.50	2600
TYPE III	16.25	13.17	22.00	0.375	22.50	22.00	2.000	2.25	2.00	60.00	26.00	18.00	15.00	7.16-5.90	DET.4	56-65	23.75	23.75	20.00	20.00	2.000	1.50-6UNC X 6.50	2947

APPROVED
Manufacturer's Pole Plan
Approved For Listing As A
Pre-Approved Drawing
WSDOT Bridge & Structures Office
By GB Date 8-11-2011

STEPHEN R. OSBORN
STATE OF WASHINGTON
16652
REGISTERED
PROFESSIONAL ENGINEER
8/9/11

TITLE STATE OF WASHINGTON
TRAFFIC SIGNAL STRUCTURES

VALMONT INDUSTRIES, INC. RESERVES THE RIGHT TO INSTALL VARIOUS, ENGINEER APPROVED, MATERIAL HANGING ACCOMMODATIONS TO FACILITATE THE MANUFACTURING PROCESS.

valmont
Valley, NE 68064
(402) 359-2201

DRAWING NUMBER DB00625 REV R