Pole Part No.	HEIGHT	Weight (Lbs)	Calculated Deflection @ 70 mph	Calculated Deflection @ 35 mph	Calculated Deflection @ 30 mph	Shaft								Base plate		Top plate Part No.
						Part No.	Length (ft)	AFB (in)	AFT (in)	THK** (in)	DWB (in)	DBT (in)	Material	Part No.	"B" Thk.	
9013-16-0001-25	25 Ft	551	0.6"	0.2"	0.1"	200-16-01-001-25	25'	12.5	9	0.1345"	39.05	27.91	A1011 Gr.50	211-16-01-001-25	1"	210-00-L04-013-25
9013-16-0001-30	30 Ft	637	1.0"	0.3"	0.3"	200-16-01-001-30	30'	13	9	0.1345"	40.63	27.91	A1011 Gr.50	211-16-01-001-30	1"	210-00-L04-013-25
9013-16-0001-35	35 Ft	776	1.4"	0.4"	0.3"	200-16-01-001-35	35'	14.5	9	0.1345"	45.41	27.91	A1011 Gr.50	211-16-01-001-35	1 1/4"	210-00-L04-013-25
9013-16-0001-40	40 Ft	1199	1.3"	0.4"	0.3"	200-16-01-001-40	40'	15.5	10	3/16"	48.31	30.81	A572 Gr.50	211-16-01-001-40	1 1/4"	210-00-L04-013-40
9013-16-0001-45	45 Ft	1431	1.4"	0.5"	0.4"	200-16-01-001-45	* 45'	17	11	3/16"	53.08	33.99	A572 Gr.50	211-16-01-001-45	1 1/4"	210-00-L04-013-45
9013-16-0001-50	50 Ft	2091	1.4"	0.5"	0.4"	200-16-01-001-50	* 50'	18	11	1/4"	55.93	33.66	A572 Gr.50	211-16-01-001-50	1 1/4"	210-00-L04-013-45

* Poles with 45' & 50' heights have two sections

#	QTY	PART NUMBER	Description	MATERIAL
1	1	See Chart	Base plate, 25" SQ., 25 1/2" BCD, Thickness - See Chart	A572 GR.50
2	1	See Chart	16 Sided Shaft, See Chart	See Chart
3	1	See Chart	Top plate, 3 9/16" I.D., 1/2" Thk.	A36 / A572 GR.50
4	1	121-3.00-0010	3" Sch.40 Pipe, 3 1/2" OD, Length 3 1/2"	A53 GR.B
5	1	210-00-L04-01	Camera Mounting Plate, 6" O.D., 4 3/4" BCD., 1/2" Thk.	A36 / A572 GR.50
6	1	230-RG-FL04	Hand Hole Ring, 5 3/8" x 12" x 2 1/2", 3/8" Thk.	ASTM A36
7	2	230-TA-F03	Hand Hole Tab, 1/4" Thk.	ASTM A36
8	1	230-CO-FL01	Hand Hole Cover, 5 7/8" x 12 1/2", 10GA Thk.	A1011-50
9	14	154-FWN-S011	3/8" Flat Washer Narrow	18-8 SS
10	2	151-HRS-0.375-08	3/8"-16 Hex Head Regular Bolt, Length 1 1/4", Full Thread	18-8 SS
11	1	230-RG-F03	Hand Hole Ring, 4 1/4" x 6 3/4" x 2", 1/4" Thk.	ASTM A36
12	1	230-CO-F01	Hand Hole Cover, 10GA Thk.	A1011-50 or A36
13	1	230-CB-00001	Cover Bar, 1/4"x1 1/2" Flat Bar, Length 9"	ASTM A36
14	1	151-HRS-0.375-23	3/8"-16 Hex Head Regular Bolt, Length 3"	18-8 SS
15	1	151-HRS-0.375-10	3/8"-16 Hex Head Regular Bolt, Length 1 1/2", Full Thread	18-8 SS
16	2	153-HRN-S005	3/8"-16 Hex Regular Nut	18-8 SS
17	1	245-JH-00001	J-Hook, 3/8" Dia. Hot Rolled Round, Length 5 7/16"	ASTM A36
18	4	153-HL-S005	3/8"-16 Hex Nylon-Insert Locknut	18-8 SS
19	4	151-HRS-0.375-13S	3/8"-16 Hex Head Regular Bolt, Length 1 3/4", Stainless Steel	ASTM F593
20	1	220-SQ-00002-07	Cover Plate, 4 3/4" SQ., 4 3/4" BCD, 1/8" or 10GA Thk.	A36 / A607 GR.50

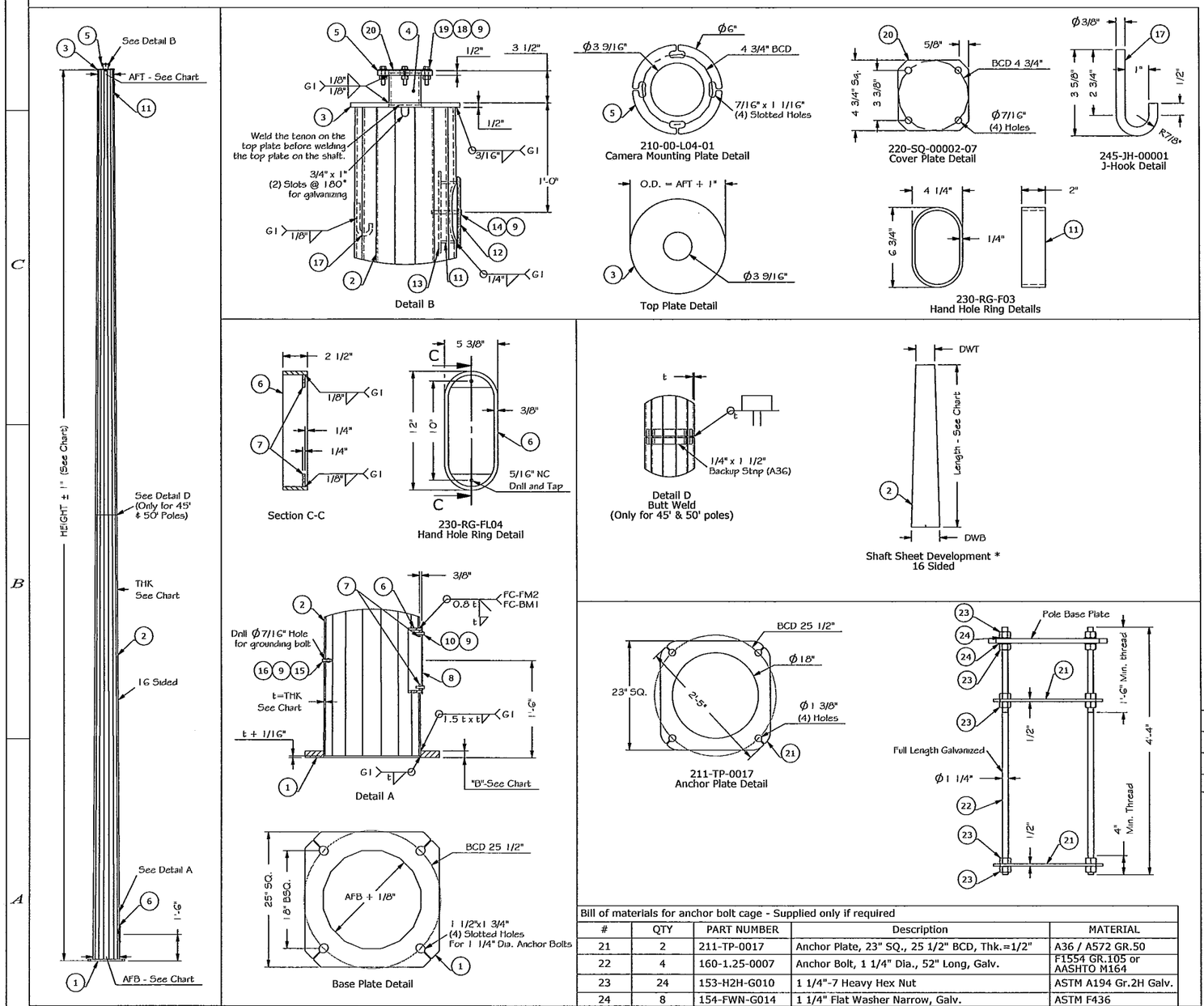

Bill of materials for anchor bolt cage - Supplied only if required

#	QTY	PART NUMBER	Description	MATERIAL
21	2	211-TP-0017	Anchor Plate, 23" SQ., 25 1/2" BCD, Thk.=1/2"	A36 / A572 GR.50
22	4	160-1.25-0007	Anchor Bolt, 1 1/4" Dia., 52" Long, Galv.	F1554 GR.105 or AASHTO M164
23	24	153-H2H-G010	1 1/4"-7 Heavy Hex Nut	ASTM A194 Gr.2H Galv.
24	8	154-FWN-G014	1 1/4" Flat Washer Narrow, Galv.	ASTM F436

NOTES:

1. DESIGN STANDARDS: AASHTO 2001 – Standard Specifications for Structural Support for Highway, Signs, Luminaires and Traffic Signals.
- Design wind speed – 90 mph
- Design life / recurrence interval – 50 years
- Loading: (1) Camera – EPA 4 sq. ft. @ 2 ft above top of pole and (1) Dish – EPA 1 sq. ft. @ top of the pole.
2. WELDING: All welding per latest edition of AWS Structural Welding Code D1.1-Steel.
3. FINISH: All steel shall be hot dip galvanized after fabrication as per ASTM A123 / A153. The silicon content of the galvanized steel shall be Si <= 0.04% or 0.15% <= Si <= 0.25%
4. Anchor bolt plates and anchor bolts are supplied only if required.
5. Maximum allowed deflection: 1.4" @ 70 mph and 0.7" @ 30 mph.
6. Customer to confirm the dimensions of the camera mounting plate (bolt circle diameter, bolt holes & thickness) and the connection bolt size prior fabrication.
7. ** 0.1345" is nominal thickness. Minimum thickness is 0.1265".

APPROVED
Manufacturer's Pole Plan
Approved For Listing As A
Pre-Approved Drawing
WSDOT Bridge & Structures Office
By GB Date 3/5/08

REV.	DESCRIPTION	DATE	BY	APPRD
3	Modified the design criteria, the anchor bolt cage & material for shafts with 0.1345" thk.	1/8/2008	LB	TB
2	Modified the dimensions of the shaft and base plate	5/7/2007	LB	TB
1	Modified the loading note	03/21/2007	LB	TB

DESIGNED: TED BROCKMAN
DRAWN: LUISS BARCAN
APPROVED: TED BROCKMAN

PROFESSIONAL ENGINEER SEAL
PROFESSIONAL ENGINEER — PROVINCE OF BRITISH COLUMBIA — T. A. BROCKMAN
Feb. 18, 2008
DATE: 21-Mar-2007

West Coast Engineering Group Inc.
6823 NORTHGATE WAY
FERNDALE, WA, USA, 98248-8309
Ph.(360) 366-3400, Fx.(360) 366-3401
www.wceng.com

PROJECT: CAMERA POLES
STATE OF WASHINGTON
Assembly Details

SCALE: NTS
QTY: -
PART #: 9013-16-0001
SHEET 1 OF 1
DWG. #: AP-WSDOT-CP-01
REV. 3

THE INFORMATION CONTAINED IN THIS DRAWING IS THE PROPERTY OF WEST COAST ENGINEERING GROUP, AND ANY INFORMATION OBTAINED FROM ITS CONTENT SHALL BE USED ONLY FOR THE SPECIFIC PURPOSE AUTHORIZED BY WEST COAST ENGINEERING GROUP.