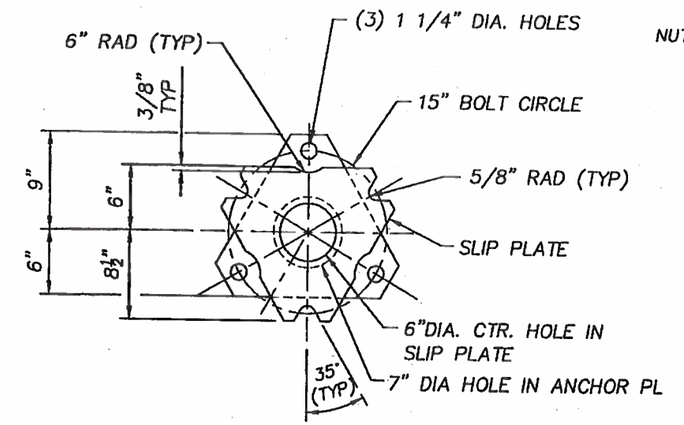

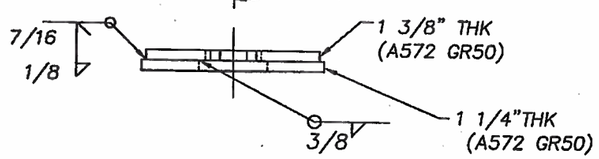

SLIP/ANCHOR BASE ASSEMBLY

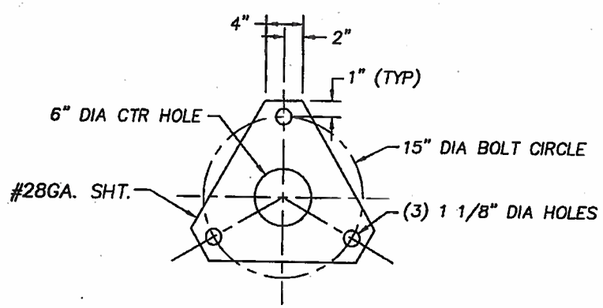

KEEPER PLATE DETAIL

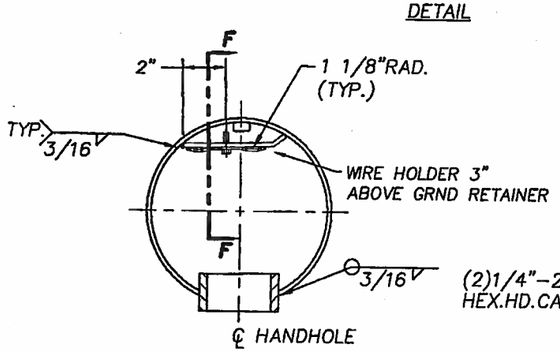

CONDUCTOR ATTACHMENT

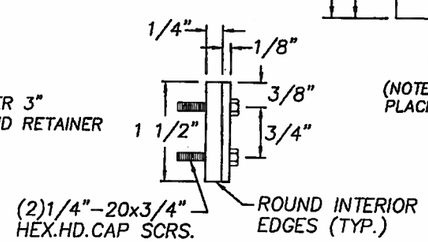

SECTION "F-F"

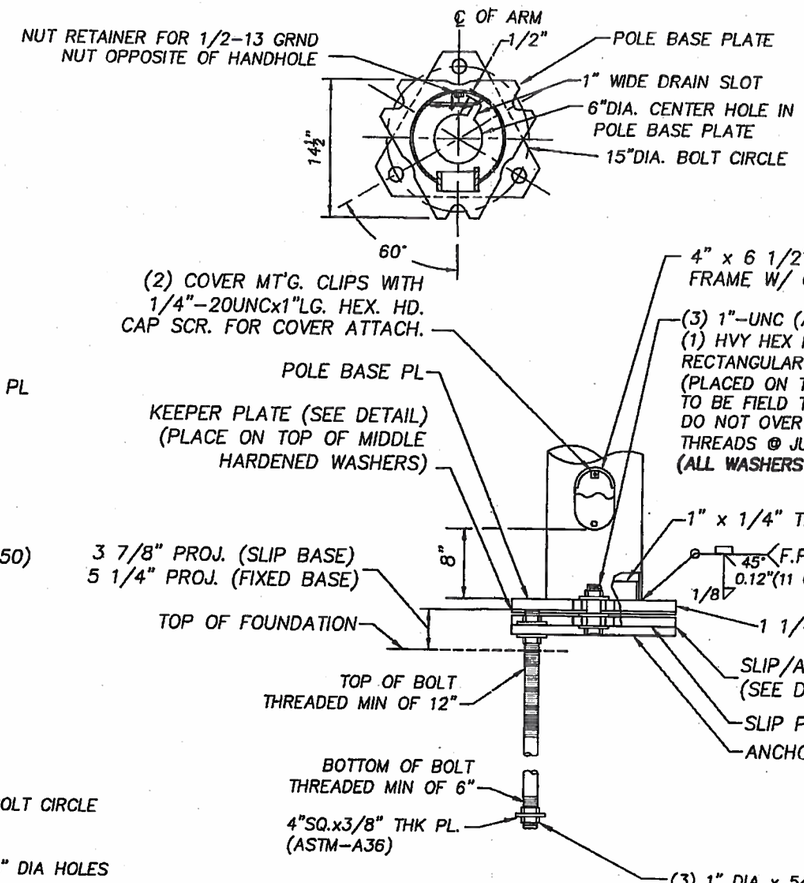

VIEW A-A

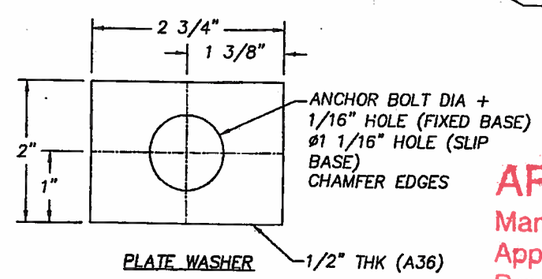

PLATE WASHER

(NOTE: FOR PLATE WASHER PLACEMENT SEE STANDARD PLAN J-28.40)

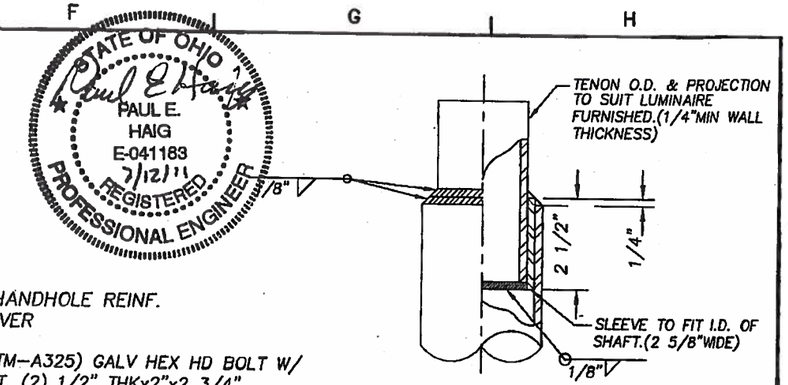

TENON TOP FOR DES.71035-Y41

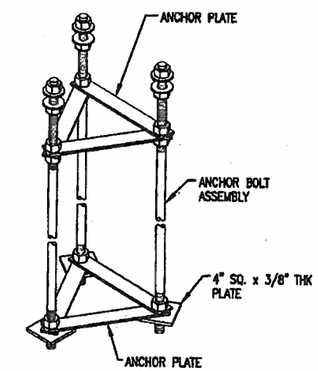

ANCHOR CAGE ASSEMBLY

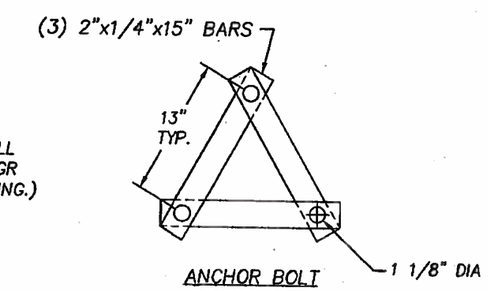

ANCHOR BOLT TEMPLATE DETAIL

(TWO SETS REQ'D PER POLE UNFINISHED)
(LOCATE 6" FROM TOP & ABOVE SQ. WASHERS@ BOTTOM)

STATE OF OHIO
PAUL E. HAIG
E-041183
7/12/11
REGISTERED
PROFESSIONAL ENGINEER

APPROVED
Manufacturer's Pole Plan
Approved For Listing As A
Pre-Approved Drawing
WSDOT Bridge & Structures Office
By GB Date 8-23-2011

STATE: WA	REQ# / SO# : ~	REV	DESCRIPTION	DATE	REV BY	CHK BY
PROJECT NAME: WASHINGTON DOT			REVISIONS			

40'-0" NOM. STEEL POLE W/ SINGLE & TWIN DAVIT ARMS (TYPE I ARM) FOR WASHINGTON DOT

Union Metal Corporation

This document and the contents herein are proprietary and the property of Union Metal Corporation. This document is not to be, copied, reproduced, or used for any reason except for the purposes which it was issued without the express written consent of Union Metal Corporation. Furthermore Union Metal Corporation reserves the right to recall this document and all copies at any time for any reason.

DESIGNED BY	CHECKED BY	DATE	SCALE	ENG REF
LCV	[illegible]	3/19/04	NTS	71035-B7
71035-B39			REVISION R9.1	SHEET 2 OF 2

Hardcopies of this document are considered uncontrolled and are to be used for reference only. Those using this document for reference must take all precautions available to ensure that this document matches the current revision maintained in digital format, within but a single source and protected by edit restrictions.