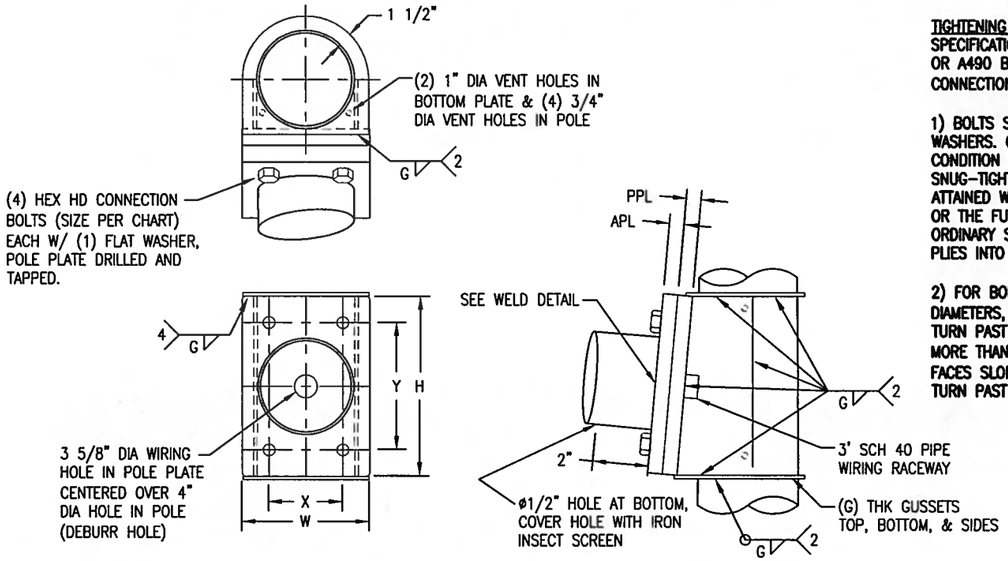

MAST ARM CONNECTION DETAIL

TIGHTENING USING TURN OF NUT METHOD BY: SPECIFICATION FOR STRUCTURAL JOINTS USING A325 OR A490 BOLTS, RESEARCH COUNCIL ON STRUCTURAL CONNECTIONS 6/00

1) BOLTS SHALL BE PLACED IN ALL HOLES WITH WASHERS. COMPACTING THE JOINT TO THE SNUG TIGHT CONDITION SHALL PROGRESS SYSTEMATICALLY. THE SNUG-TIGHTENED CONDITION IS THE TIGHTNESS THAT IS ATTAINED WITH A FEW IMPACTS OF AN IMPACT WRENCH OR THE FULL EFFORT OF AN IRONWORKER USING AN ORDINARY SPUD WRENCH TO BRING THE CONNECTED PLIES INTO FIRM CONTACT.

2) FOR BOLT LENGTHS NOT MORE THAN 4 BOLT DIAMETERS, WITH BOTH FACES NORMAL TO BOLT, 1/3 TURN PAST SNUG POINT. FOR ONE FACE SLOPED NO MORE THAN 1:20, 1/2 TURN PAST SNUG. FOR BOTH FACES SLOPED NO MORE THAN 1:20 FROM BOLT, 2/3 TURN PAST SNUG.

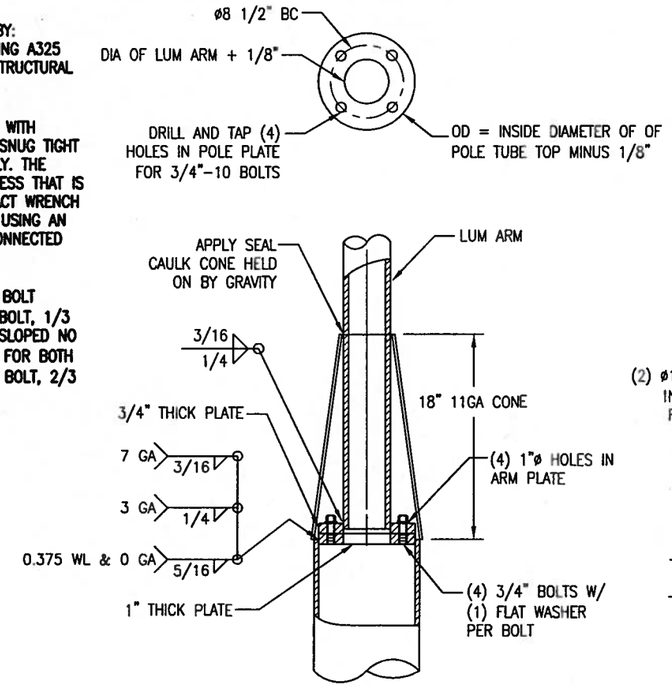

BOLTED CONNECTION CONE DETAIL
(FOR 30' LUM MTG HGT)

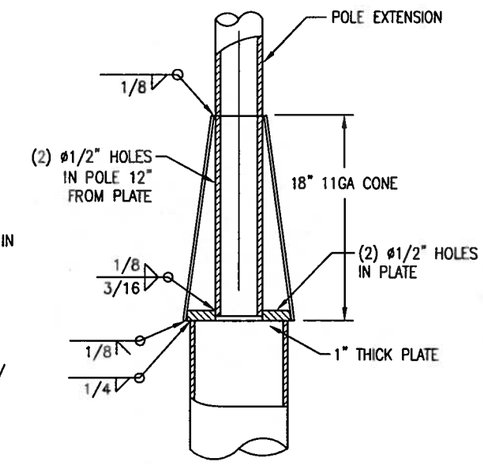

WELDED CONNECTION CONE DETAIL
(FOR 35', 40' & 50' LUM MTG HGT)

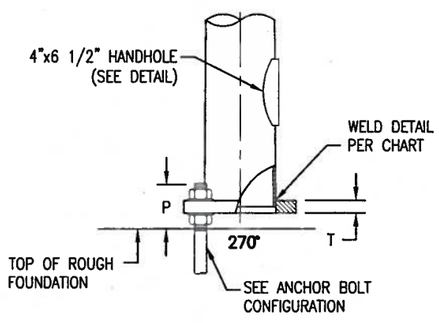

BASE CONNECTION DETAIL

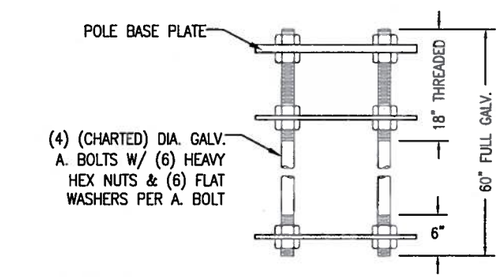

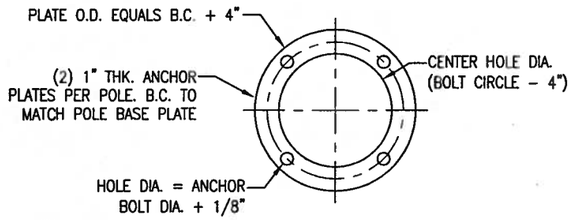

ANCHOR BOLT CONFIGURATION
(SHIPPED UNASSEMBLED)
(REF. B100-A354)

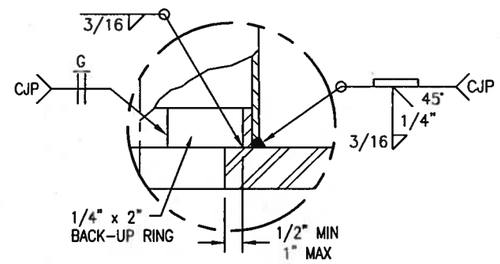

POLE BASE (PER CHART) & ARM FLANGE FULL PEN WELD DETAIL

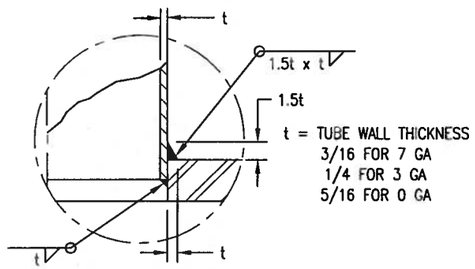

POLE BASE SOCKET WELD DETAIL (PER CHART)

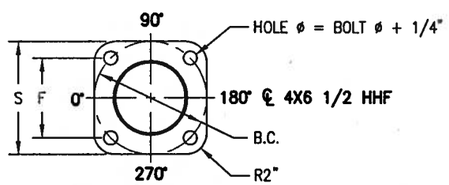

BASE PLATE DETAIL

THOMAS S. LACH
STATE OF WASHINGTON
42082
REGISTERED
PROFESSIONAL ENGINEER
1/22/2014
Expires 11/17/2014

APPROVED
Manufacturer's Pole Plan
Approved For Listing As A
Pre-Approved Drawing
WSDOT Bridge & Structures Office
By: GB Date: 1-27-2014

PROJECT INFORMATION	
PROJECT:	
COUNTY:	
CITY:	
REQ:	

STATE: WASHINGTON	REQ# / SO# : 0873-07-1	REV	DESCRIPTION	DATE	REV BY / CHK BY
PROJECT NAME: WASHINGTON DOT STANDARDS			REVISIONS		

TYPE III STEEL COMBINATION TRAFFIC & STREET LIGHTING POLES, TYPE 1 LUM. ARM
STATE OF WASHINGTON DOT

Union Metal Corporation

This document and the contents herein are proprietary and the property of Union Metal Corporation. This document is not to be, copied, reproduced, or used for any reason except for the purposes which it was issued without the express written consent of Union Metal Corporation. Furthermore Union Metal Corporation reserves the right to recall this document and all copies at any time for any reason.

DESIGNED BY	CHECKED BY	DATE	SCALE	ENG REF
LCV	ESL	3/4/03	NTS	71026-B35
71026-B87			REVISION R13	SHEET 3 OF 3

Hardcopies of this document are considered uncontrolled and are to be used for reference only. Those using this document for reference must take all precautions to ensure that this document matches the current revision maintained in digital format, within but a single source and protected by edit restrictions.