DESIGN NO	TUBE DATA	LENGTH	TYPE
50200-Y157	11E-5.35x3.95x10'-0"	10'-0"	RM
50200-Y158	11E-5.91x3.95x14'-0"	14'-0"	FB

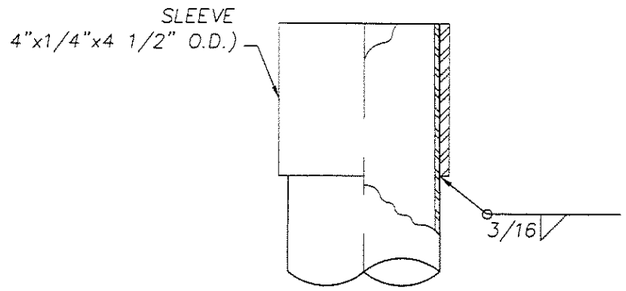

POLE TOP DETAIL

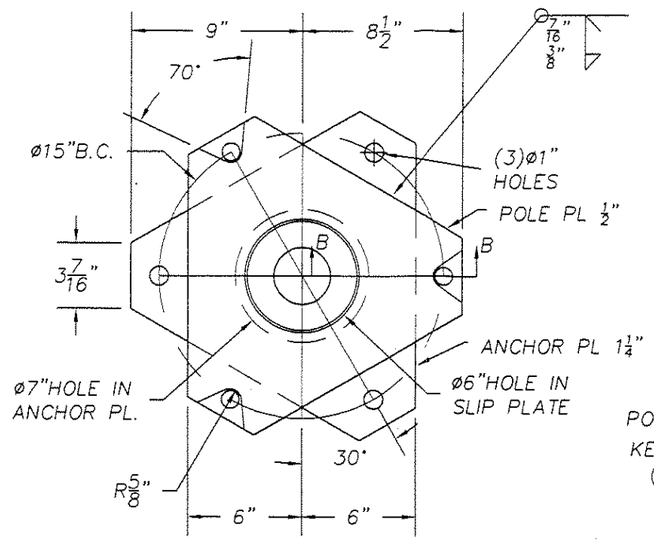

SLIP/ANCHOR PLATE DETAIL

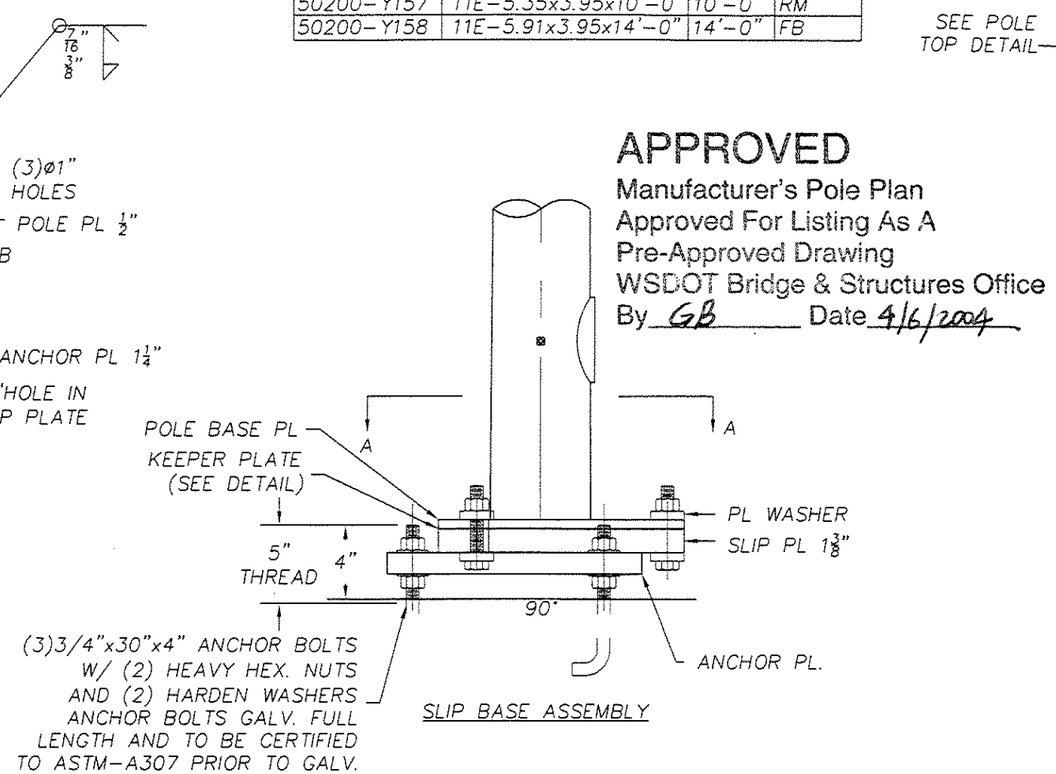

SLIP BASE ASSEMBLY

APPROVED
Manufacturer's Pole Plan
Approved For Listing As A
Pre-Approved Drawing
WSDOT Bridge & Structures Office
By GB Date 4/6/2004

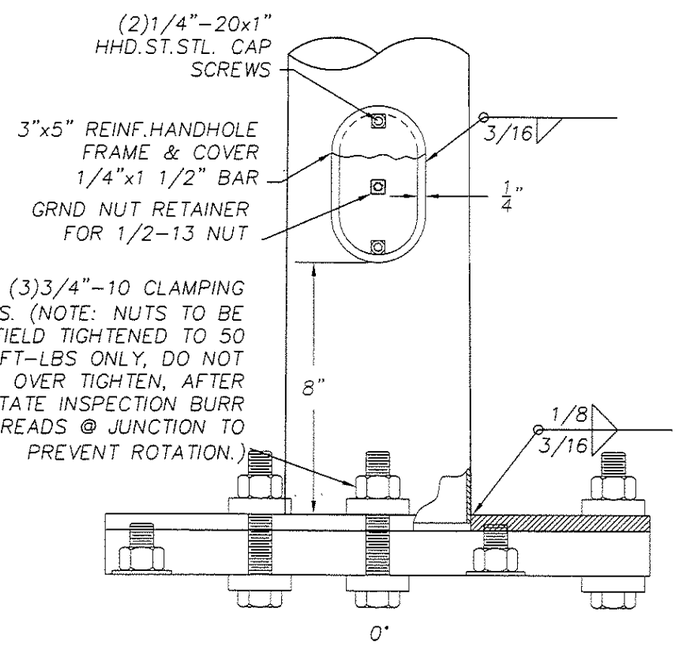

HAND HOLE DETAIL

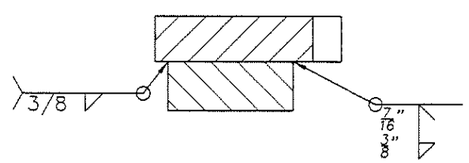

SECTION B-B

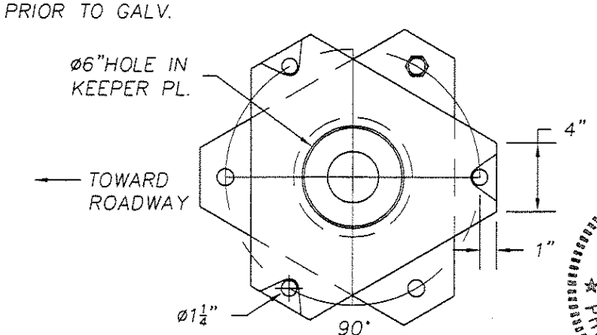

SECTION A-A
KEEPER PLATE 28ga.

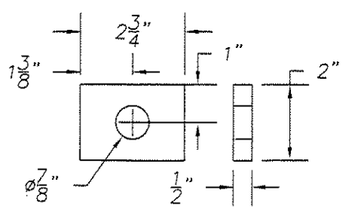

PLATE WASHER

STATE OF OHIO
JOHN M. FRITZ
E-62406
REGISTERED PROFESSIONAL ENGINEER
4/5/04

NOTE:
ALL PIPES AND HOLES SHALL HAVE ROUND EDGES.

MATERIAL SPECIFICATIONS	
MONTUBES	ASTM-A595 GR. A
PLATE	ASTM-A572 GR. 50
CONN BOLTS	ASTM-A325
KEEPER PLATE	ASTM-A653
MISC. HARDWARE	S.S. AISI-300 SERIES
ANCHOR BOLTS	ASTM-A307
HARDWARE FINISH	GALV. TO ASTM-A153
STRUCTURE FINISH	GALV. TO ASTM-A123

RATING NOTE:
DESIGNED PER 2001 AASHTO 4th ed.
DESIGN LIFE: 25 YEARS
BASIC WIND. SPEED: 90 MPH
LOADING PER STANDARD PLAN J-7a Rev.7/01

R03	WA43247-2	CHANGED A.BOLT TO A307	4/5/04	LCV lcv
R02	WA43247-1	GENERAL REVISION, COMMENTS BY WASHINGTON DOT	3/17/04	LCV exc
R01	0873-07-5	UPDATED FB & RM POLES TO 2001 AASHTO	11/25/03	LCV gms

REVISIONS

TRAFFIC SIGNAL
TYPE FB & RM FOR
STATE OF WASHINGTON

LOF YES(PS) ENG.REF.#
REQ.# 0634-16-97 S.O.# CAD# 0634A97

Union Metal CORPORATION

R03

DRAWN JDJ
DATE 12/30/97
CHECKED gmp

DRAWING NO.
50200-B58

ORIGINAL