APPROVED
Manufacturer's Pole Plan
Approved For Listing As A
Pre-Approved Drawing
WSDOT Bridge & Structures Office
By GB Date 11-9-09

THOMAS S. SMITH
STATE OF WASHINGTON
42082
REGISTERED
PROFESSIONAL ENGINEER
9-8-09
EXPIRES 11-17-10

FOR APPROVAL ONLY

PRINT NAME: _____

SIGNATURE: _____

DATE: _____

MATERIAL DATA		
Component	ASTM Designation	Minimum Yield
⚠ Weldable Elbow	A234, Gd. WPB	35 K.S.I.
Plates	A36	36 K.S.I.
Steel Band	A36	
Galvanizing	A123 & A153	

⚠ NOTE: Welding Of Structures Shall Be In Accordance With The Current AWS Structural Welding Code D1.1.

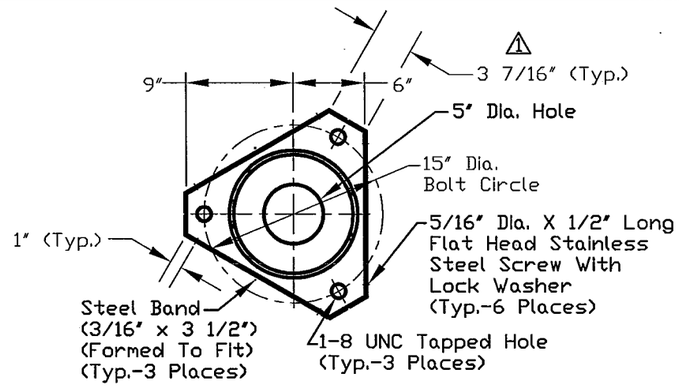

SECTION A-A

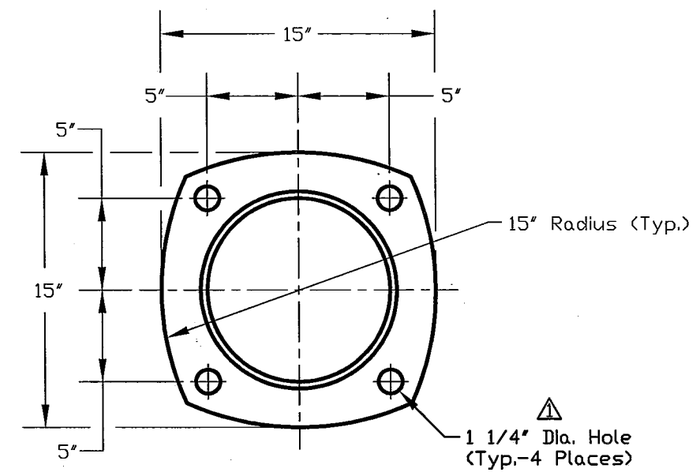

VIEW B-B

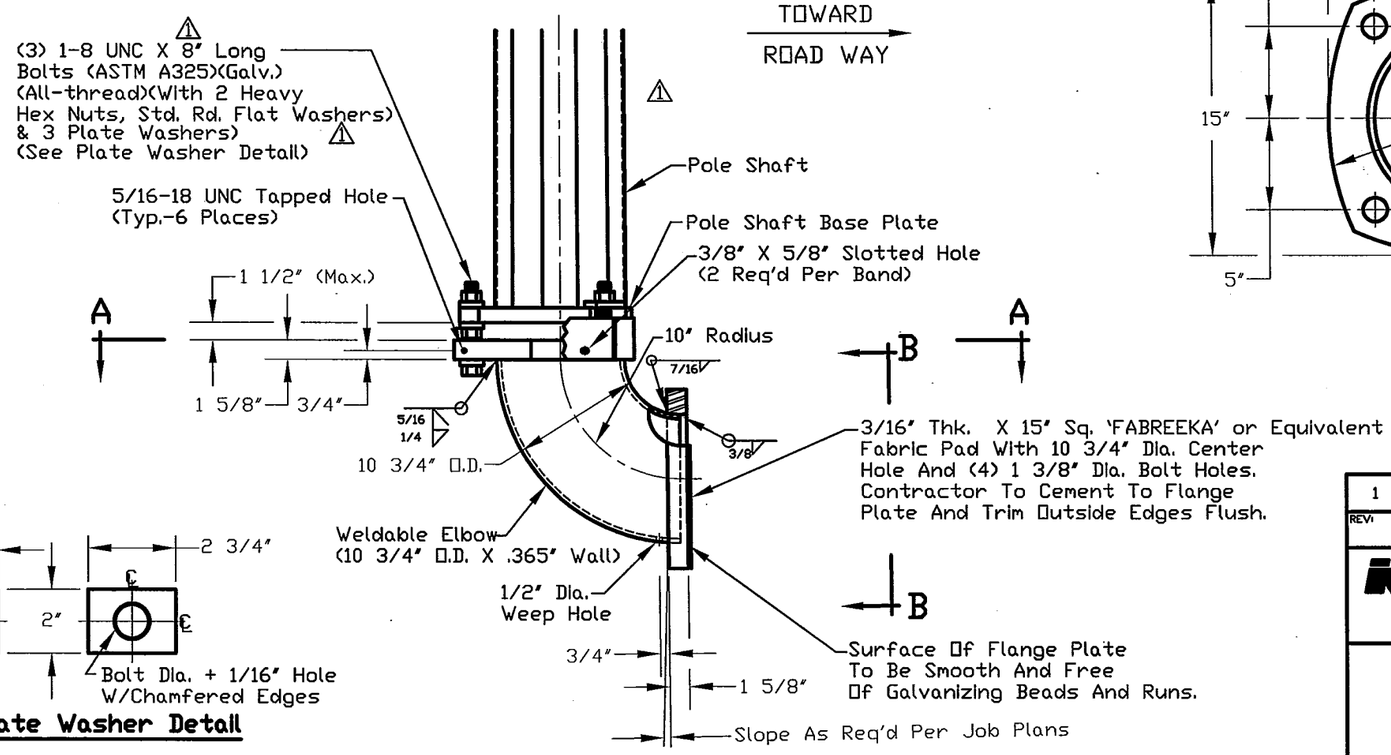

LIGHTING BRACKET DETAIL

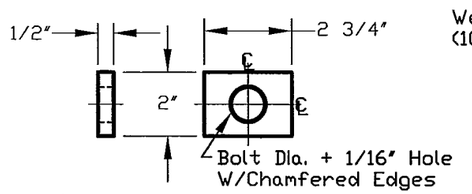

⚠ Plate Washer Detail

REV:	DESCRIPTION:	BY:	DATE:
1	REVISED PER RETURNED MARKED-UP DRAWING.	JHG	8/18/2009

KW
909 INDUSTRIAL BLVD. • SUGAR LAND, TEXAS 77478

STATE OF WASHINGTON
'J' & 'T' TYPE ROADWAY POLE
(BRIDGE MOUNT DETAILS)

DRAWN BY:	DATE:	DRAWING NO.:	REV:
JHG	1/11/2008	10-31-RWP-3	1
APPROVED BY:	DATE:		

E:\CAD\10 Submittal Drawings\10-31\10-31-RWP-3-1.dwg, 8/18/2009 5:04:51 PM, jim.grein