APPROVED
Manufacturer's Pole Plan
Approved For Listing As A
Pre-Approved Drawing
WSDOT Bridge & Structures Office
By GB Date 11-9-09

THOMAS S. BACH
STATE OF WASHINGTON
42082
REGISTERED
PROFESSIONAL ENGINEER
11-5-09
EXPIRES 11-17-10

FOR APPROVAL ONLY

PRINT NAME: _____

SIGNATURE: _____

DATE: _____

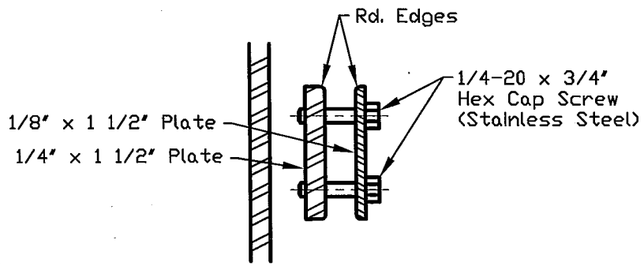

Section F-F
Conductor Mtg. Bracket Detail

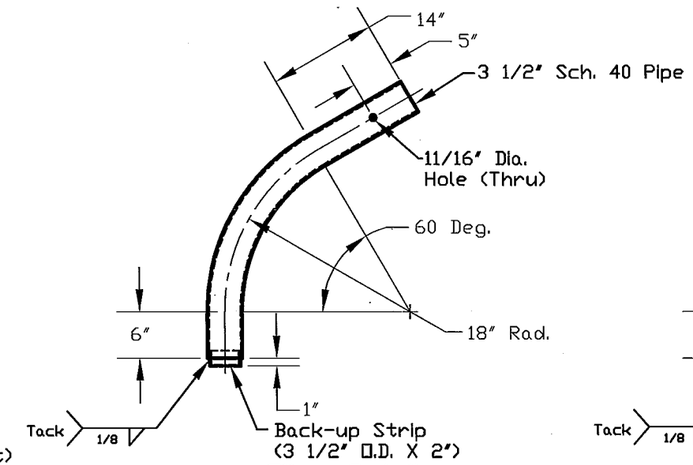

Elbow Detail
(For 6, 8, & 10-Ft. Arms)

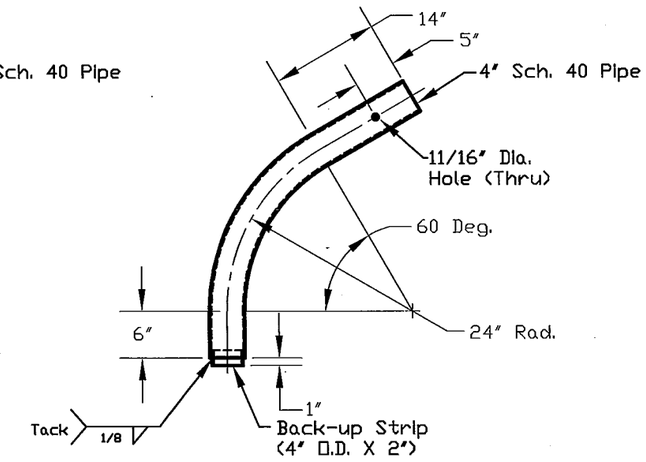

Elbow Detail
(For 12, 14, & 16-Ft. Arms)

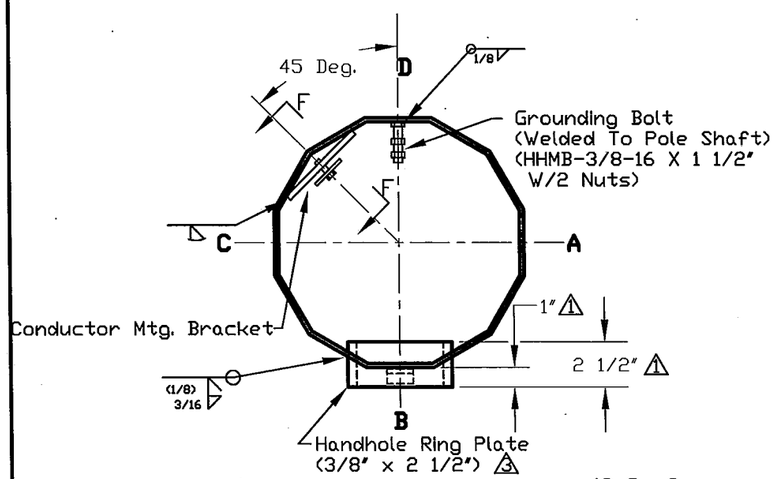

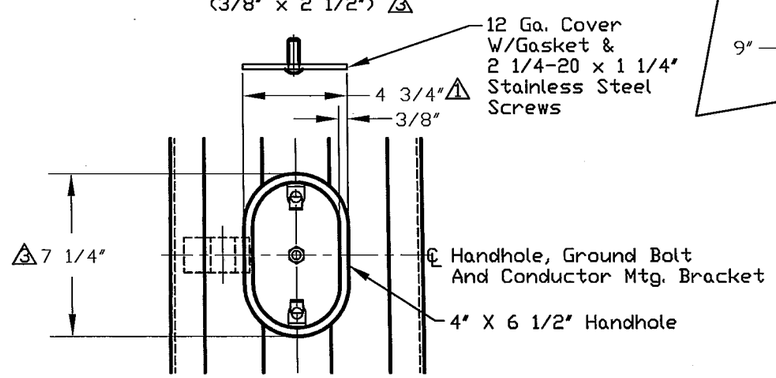

Handhole Detail

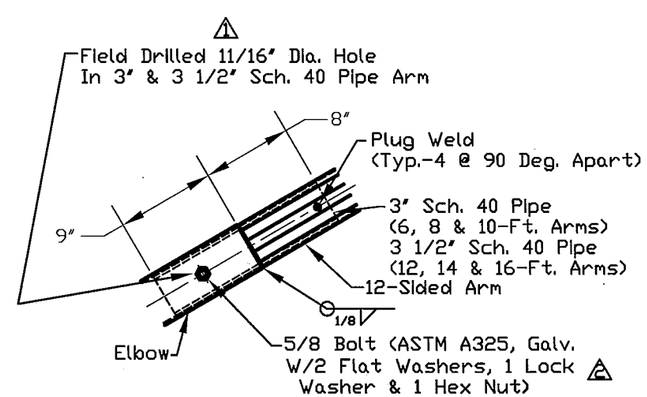

Slip Joint Detail

REV:	DESCRIPTION:	BY:	DATE:
5	CHANGED REVISION NUMBER TO MATCH REVISION NUMBER ON SHT 1 OF 3 PER WASHINGTON D.O.T. REQUEST.	JHG	11/5/2009
3	REVISED PER RETURNED MARKED-UP DRAWING.	JHG	10/20/2009
2	REVISED PER RETURNED MARKED-UP DRAWING.	JHG	9/16/2009
1	REVISED PER RETURNED MARKED-UP DRAWING.	JHG	8/18/2009

KW
909 INDUSTRIAL BLVD. • SUGAR LAND, TEXAS 77478

STATE OF WASHINGTON
'T' TYPE ROADWAY POLE

SHT. 3 OF 3

DRAWN BY:	DATE:	DRAWING NO:	REV:
JHG	1/10/2008	10-31-RWP-2	5
APPROVED BY:	DATE:		

E:\CAD\10 Submittal Drawings\10-31\10-31-RWP-2-5 (3 OF 3) .dwg, 11/5/2009 9:18:25 AM, jim.grein