APPROVED
Manufacturer's Pole Plan
Approved For Listing As A
Pre-Approved Drawing
WSDOT Bridge & Structures Office
By GB Date 11-9-09

THOMAS S. BACH
STATE OF WASHINGTON
42082
REGISTERED
PROFESSIONAL ENGINEER
11-5-09
EXPIRES 11-12-10

FOR APPROVAL ONLY

PRINT NAME: _____

SIGNATURE: _____

DATE: _____

CONNECTOR BOLT			ANCHOR BOLT			
Mounting Height (Ft.)	Dia. (In.)	Length (In.)	Dia. (In.)	Length (In.)	Bearing Plate Sq. (In.)	Bearing Plate Thk. (In.)
25 to 40	1	5 1/2	1	54	4	3/8
45 to 50	1 1/8	5 1/2	1 1/8	66	4	3/8

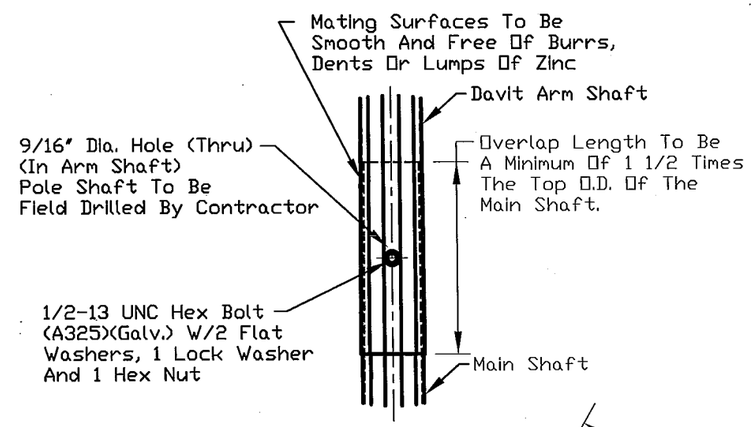

Slip Joint Detail

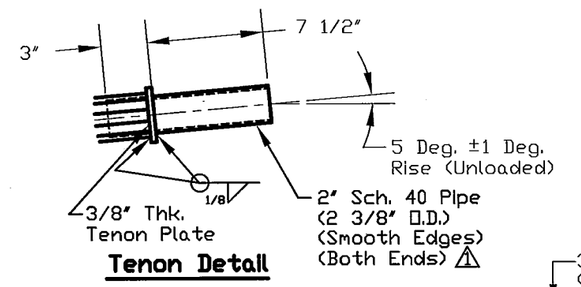

Tenon Detail

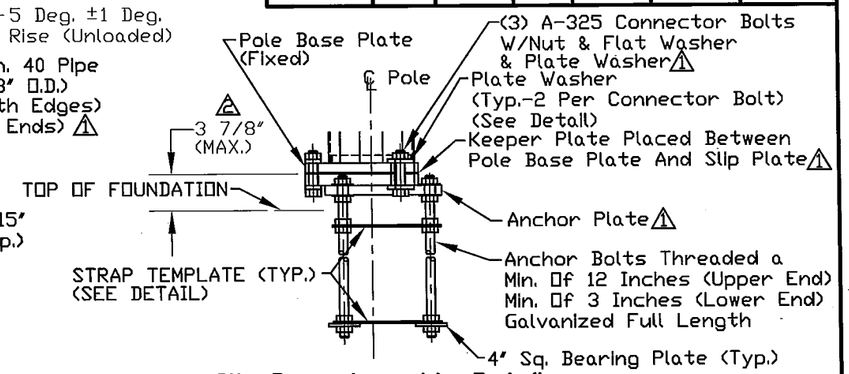

Slip Base Assembly Detail

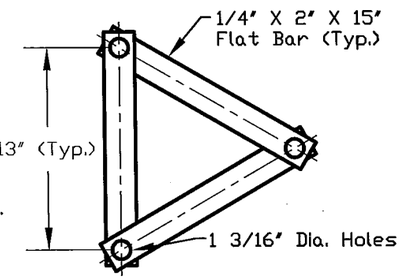

Strap Template Detail (Placed Over Anchor Bolts)

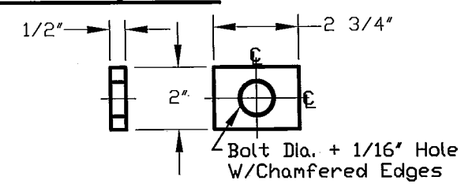

Plate Washer Detail

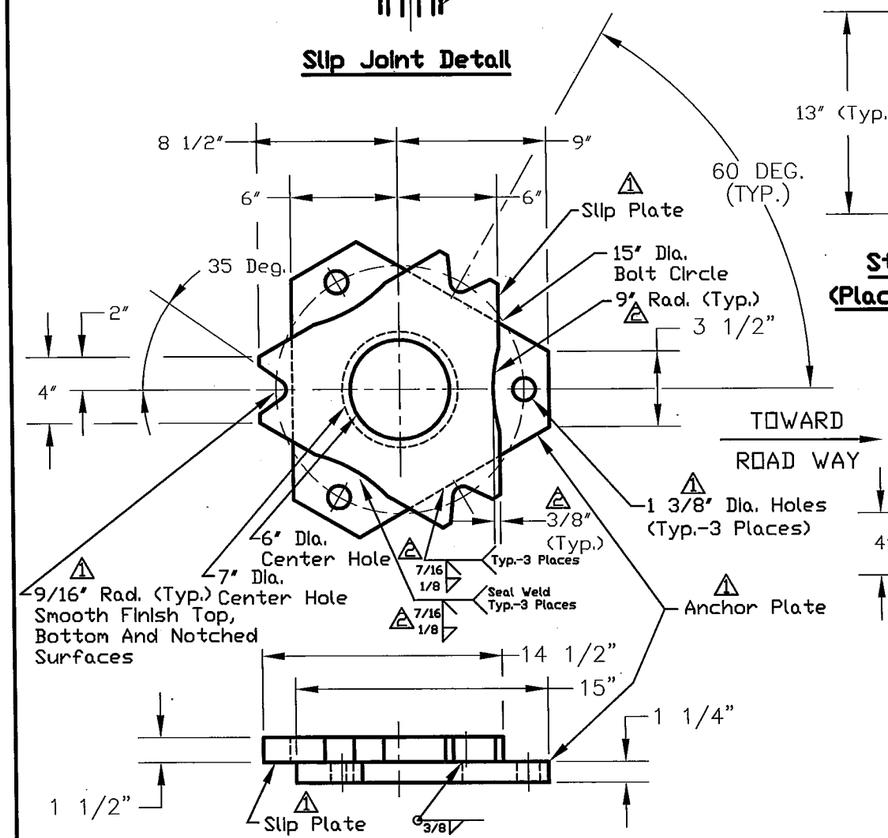

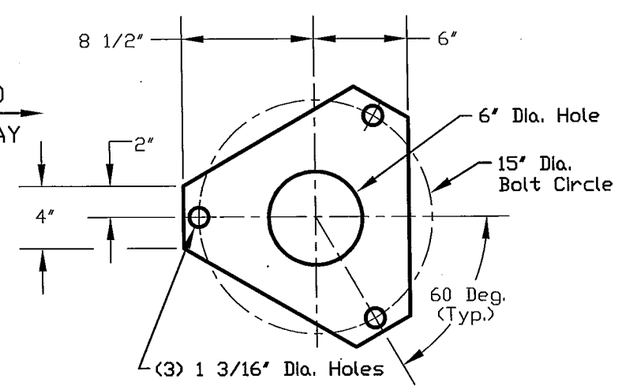

Keeper Plate Detail (Galvanized 28 Ga. Sheet)

REV.	DESCRIPTION	BY	DATE
4	CHANGED REVISION NUMBER TO MATCH REVISION NUMBER ON SHT 1 OF 3 PER WASHINGTON D.O.T. REQUEST.	JHG	11/5/2009
2	REVISED PER RETURNED MARKED-UP DRAWING.	JHG	10/19/2009
1	REVISED PER RETURNED MARKED-UP DRAWING.	JHG	9/18/2009

KW
909 INDUSTRIAL BLVD. • SUGAR LAND, TEXAS 77478

STATE OF WASHINGTON
'J' TYPE ROADWAY POLE

SHT. 2 OF 3

DRAWN BY: JHG	DATE: 9/24/2007	DRAWING NO.: 10-31-RWP-1	REV.: 4
APPROVED BY:	DATE:		

E:\CAD\10 Submittal Drawings\10-31\10-31-RWP-1-4 (2 OF 3) .dwg, 11/5/2009 9:02:44 AM, jim.grein