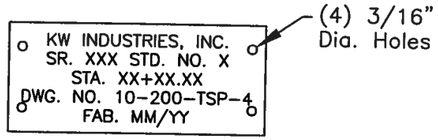

Identification Tag Detail 1

Material–14 Ga. Aluminum
Secure With (4) 1/8" Stainless Steel Rivets. 1
Letters To Be Stamped or Etched.
Minimum Letter Size–3/16".

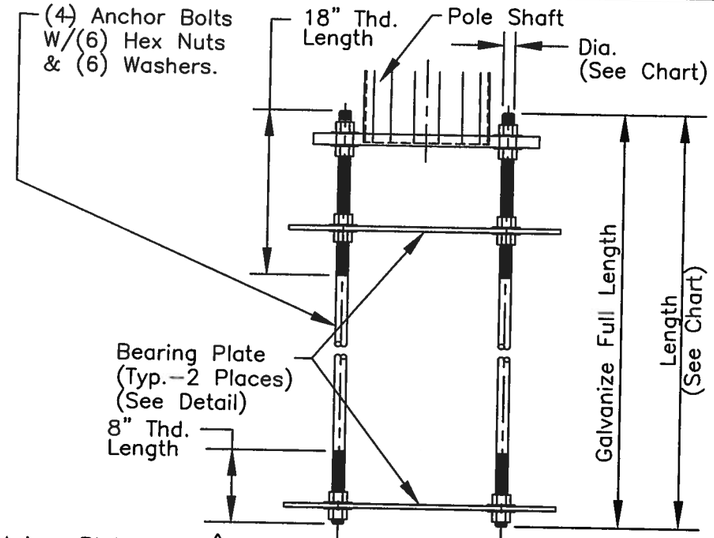

1 Anchor Bolt Ass'y Detail

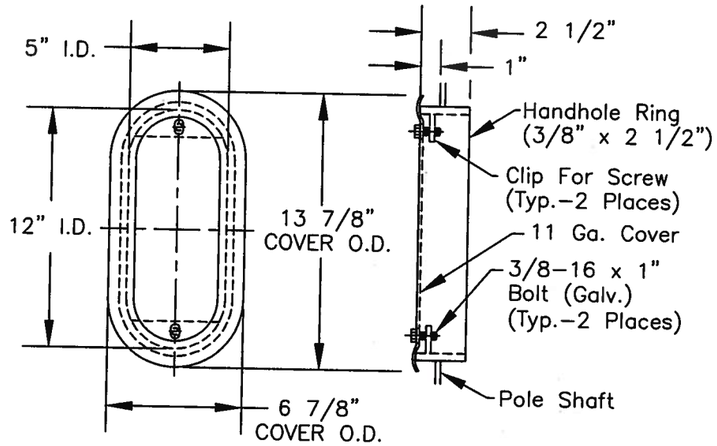

Handhole Ring Ass'y Detail 4

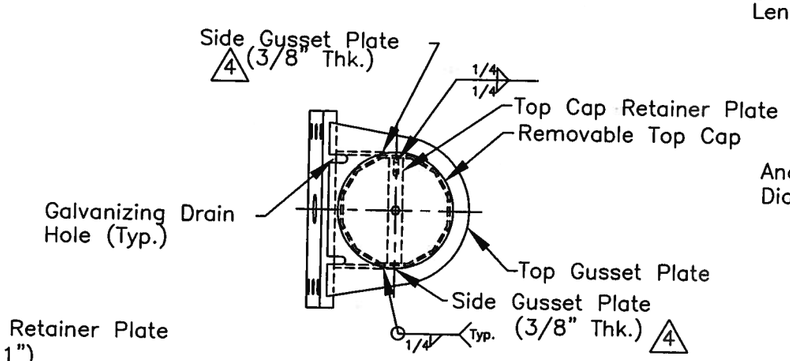

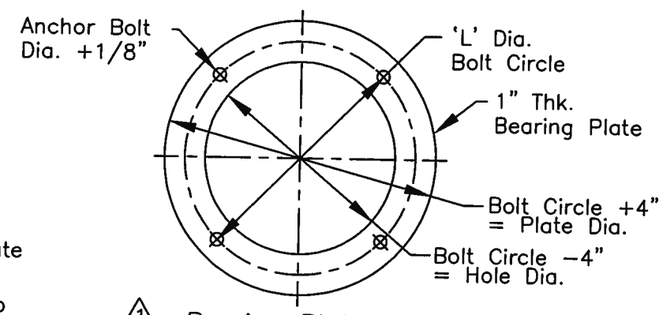

1 Bearing Plate Detail

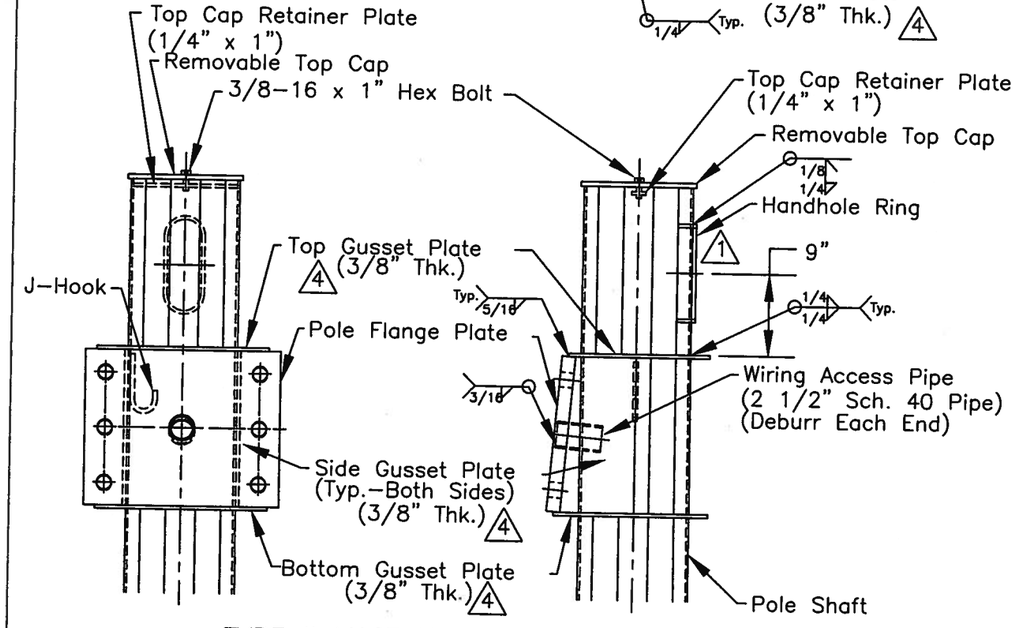

TYPE II MAST HEAD DETAIL

APPROVED
Manufacturer's Pole Plan
Approved For Listing As A
Pre-Approved Drawing
WSDOT Bridge & Structures Office
By GA Date 5-25-2011

REV:	DESCRIPTION:	BY:	DATE:
5	REVISED PER MARK UPS ERF# 8506	IF	3/22/2011
4	REVISED PER RETURNED MARKED–UP SUBMITTAL DRAWINGS.	JHG	11/17/2009
3	CHANGED REVISION NUMBER TO MATCH REVISION NUMBER ON SHT. 1 OF 3 PER WASHINGTON D.O.T. REQUEST.	JHG	11/5/2009
1	REVISED PER RETURNED MARKED–UP SUBMITTAL DRAWINGS.	JHG	8/22/2009

KW
909 INDUSTRIAL BLVD. •SUGAR LAND, TEXAS 77478

STATE OF WASHINGTON
TYPE II TRAFFIC SIGNAL STRUCTURES

SHT. 3 OF 3

DRAWN BY:	DATE:	DRAWING NO.:	REV:
JHG	1/26/2009	10–200–TSP–4	5
APPROVED BY:	DATE:		