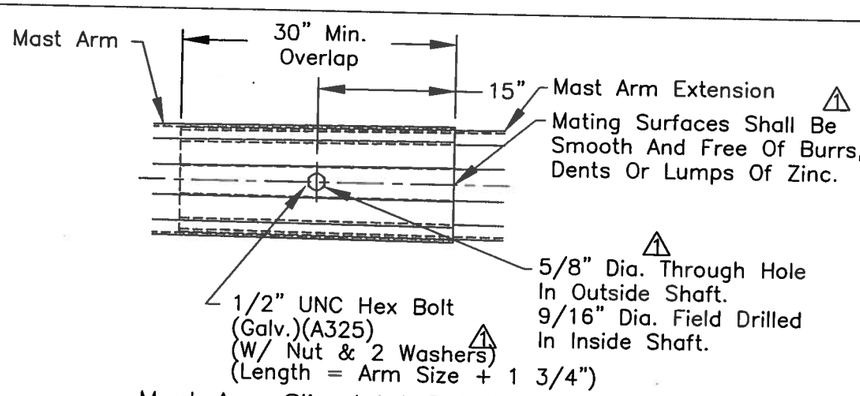


Mast Arm Slip Joint Detail

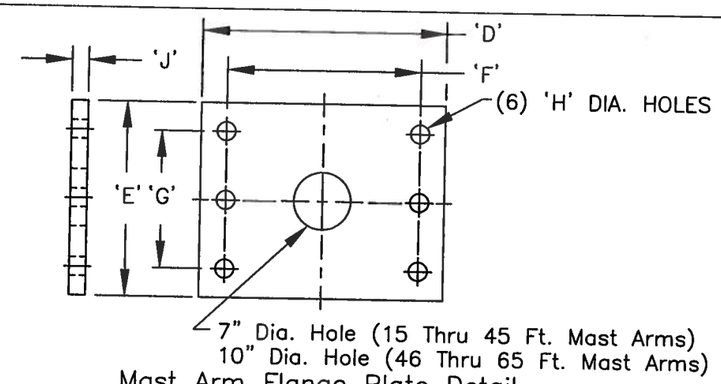


Mast Arm Flange Plate Detail

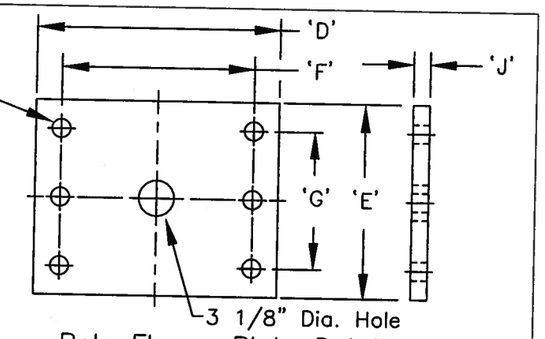


Pole Flange Plate Detail

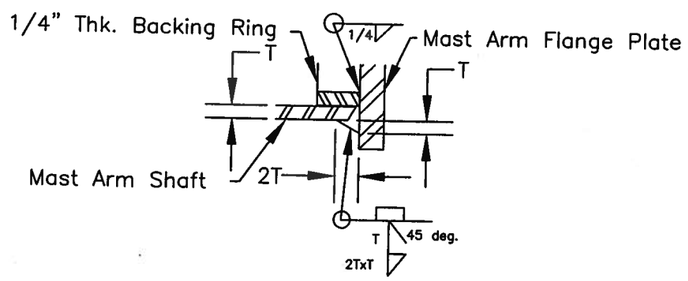


MastT Arm Flange Plate Weld Detail

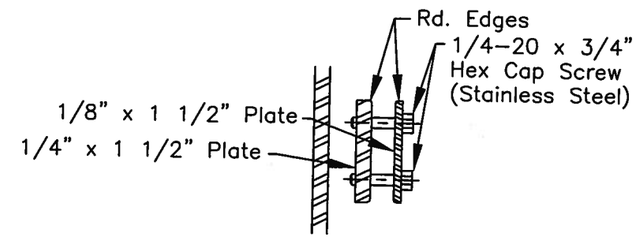


Section F-F

Conductor Mtg. Bracket Detail

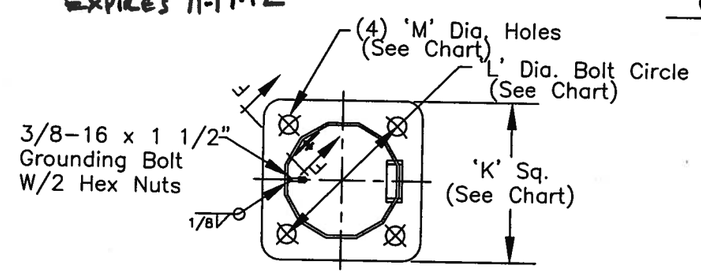


APPROVED
Manufacturer's Pole Plan
Approved For Listing As A
Pre-Approved Drawing
WSDOT Bridge & Structures Office
By GB Date 5-25-2011

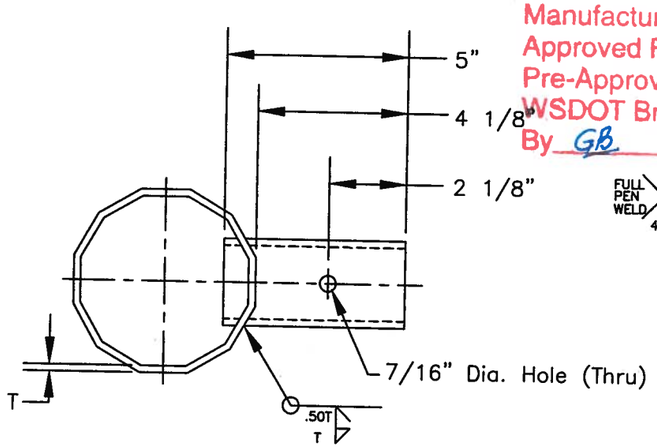


Typ. Mast Arm Tenon Detail

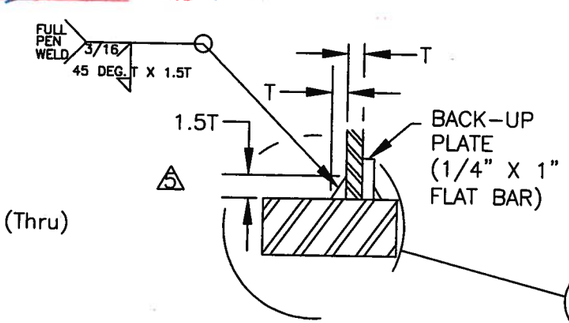


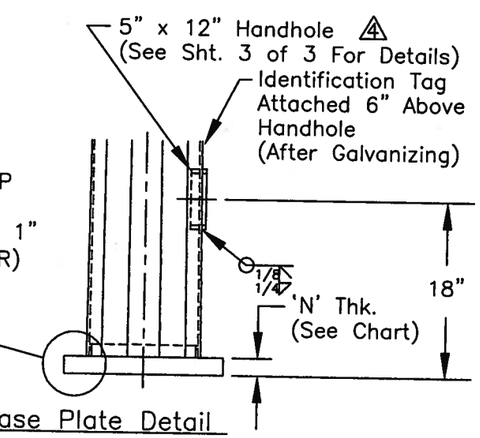


Base Plate Detail

THOMAS S. LACH
STATE OF WASHINGTON
42082
REGISTERED
PROFESSIONAL ENGINEER
5-25-11
EXPIRES 11-17-12

| REV: | DESCRIPTION: | BY: | DATE: |
|---|---|---|---|
| 5 | REVISED PER MARK UPS ERF# 8506 | IF | 3/22/2011 |
| 4 | REVISED PER RETURNED MARKED-UP SUBMITTAL DRAWINGS. | JHG | 11/17/2009 |
| 3 | CHANGED REVISION NUMBER TO MATCH REVISION NUMBER ON SHT. 1 OF 3 PER WASHINGTON D.O.T. REQUEST. | JHG | 11/5/2009 |
| 2 | REVISED PER RETURNED MARKED-UP SUBMITTAL DRAWINGS. | JHG | 9/17/2009 |
| 1 | REVISED PER RETURNED MARKED-UP SUBMITTAL DRAWINGS. | JHG | 8/22/2009 |

KW
909 INDUSTRIAL BLVD. •SUGAR LAND, TEXAS 77478

STATE OF WASHINGTON
TYPE II TRAFFIC SIGNAL STRUCTURES

SHT. 2 OF 3

| DRAWN BY: | DATE: | DRAWING NO.: | REV: |
|---|---|---|---|
| JHG | 1/26/2009 | 10-200-TSP-4 | 5 |
| APPROVED BY: | DATE: | | |